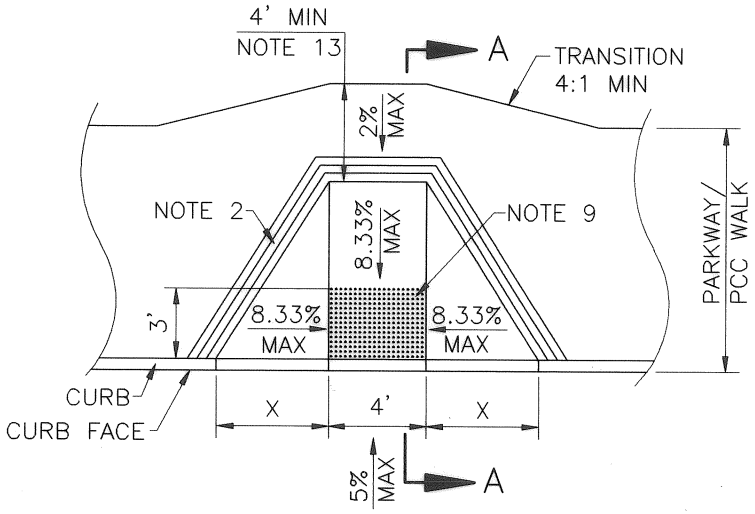

TYPE 1

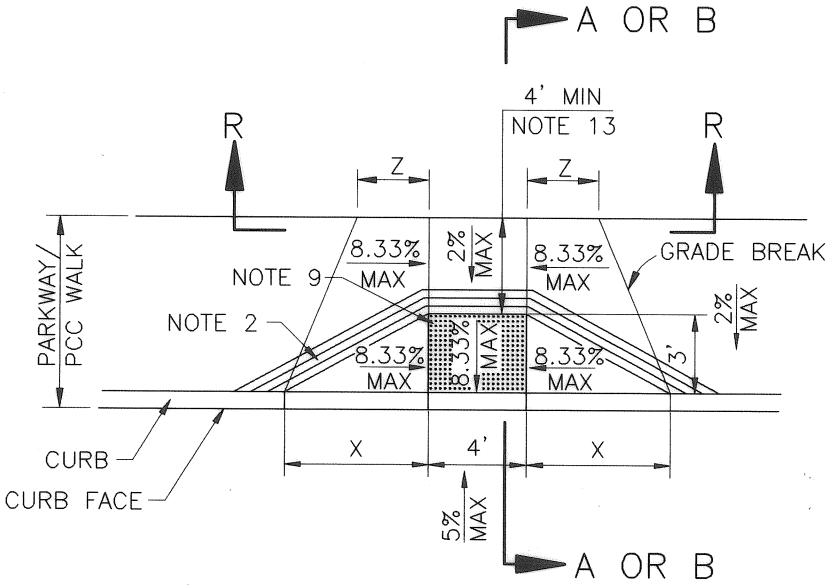

SEE FIGURE 1
ON SHEET 7

TYPE 2

NOTE:
SEE SHEET 9 FOR NOTES

CASE A

NO.	DATE	REVISIONS
4		
3		
2		
1		

CITY OF LONG BEACH, DEPARTMENT OF PUBLIC WORKS
2017 STANDARD PLANS

CURB RAMP

STANDARD PLAN NO. 122

APPROVED BY: _____ DATE: 11/13/17
CITY ENGINEER R.E. No. 65081

SHEET 1 OF 9

SAVED PATH: R:\Standard Plans\CLBSTD_2017\CLB-STD PLAN-2017 MULTI-LAYOUT

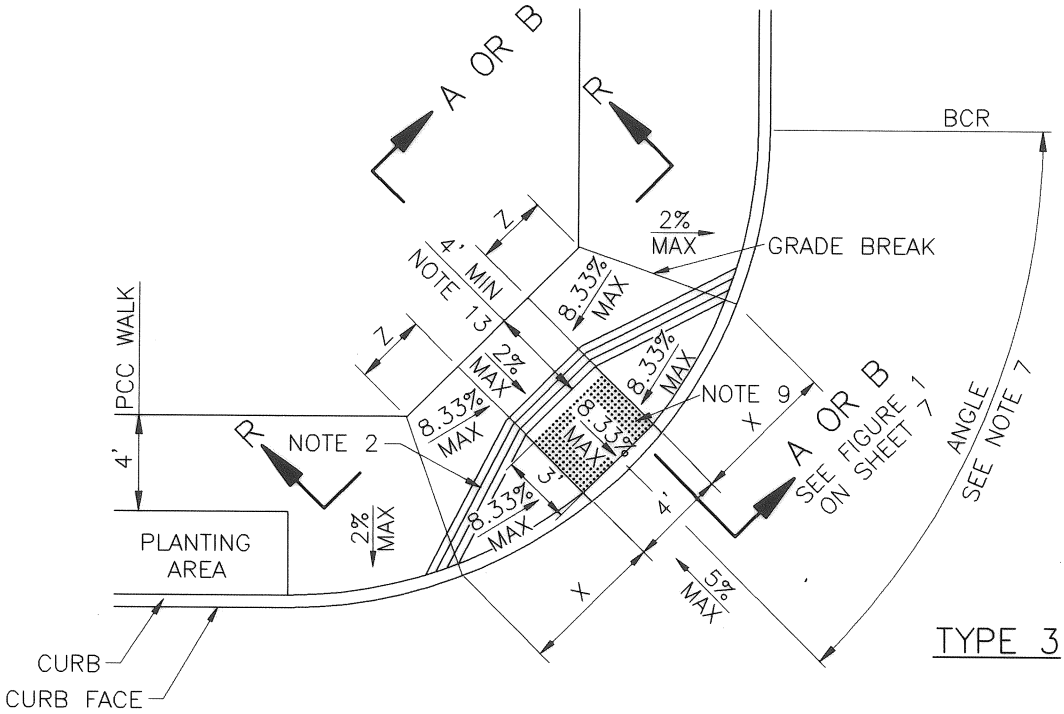

TYPE 3

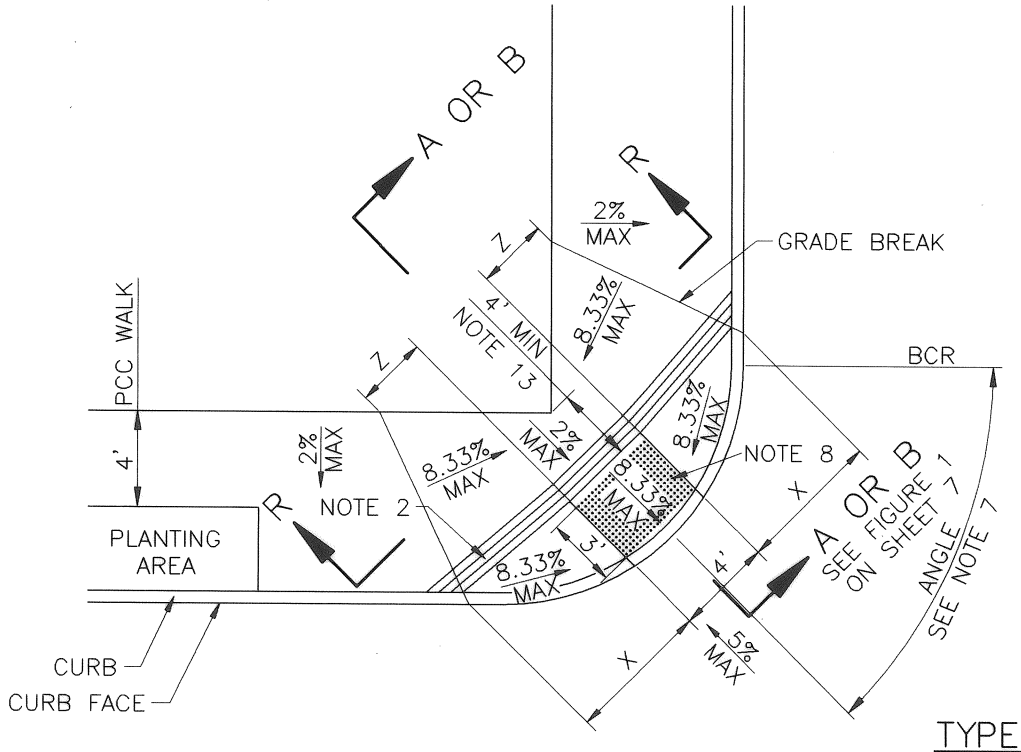

TYPE 4

NOTE:
SEE SHEET 9 FOR NOTES

CASE A

NO.	DATE	REVISIONS
4		
3		
2		
1		

CITY OF LONG BEACH, DEPARTMENT OF PUBLIC WORKS
2017 STANDARD PLANS

CURB RAMP

STANDARD PLAN NO. 122

APPROVED BY: _____ DATE: 11/13/17
CITY ENGINEER R.E. No. 65081

SHEET 2 OF 9

SAVED PATH: R:\Standard Plans\CLBSTD_2017\CLB-STD PLAN-2017 MULTI-LAYOUT

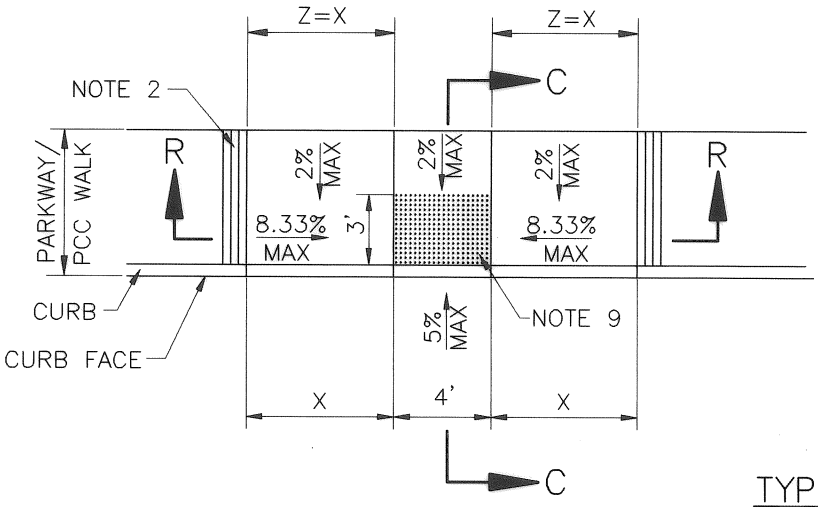

TYPE 1

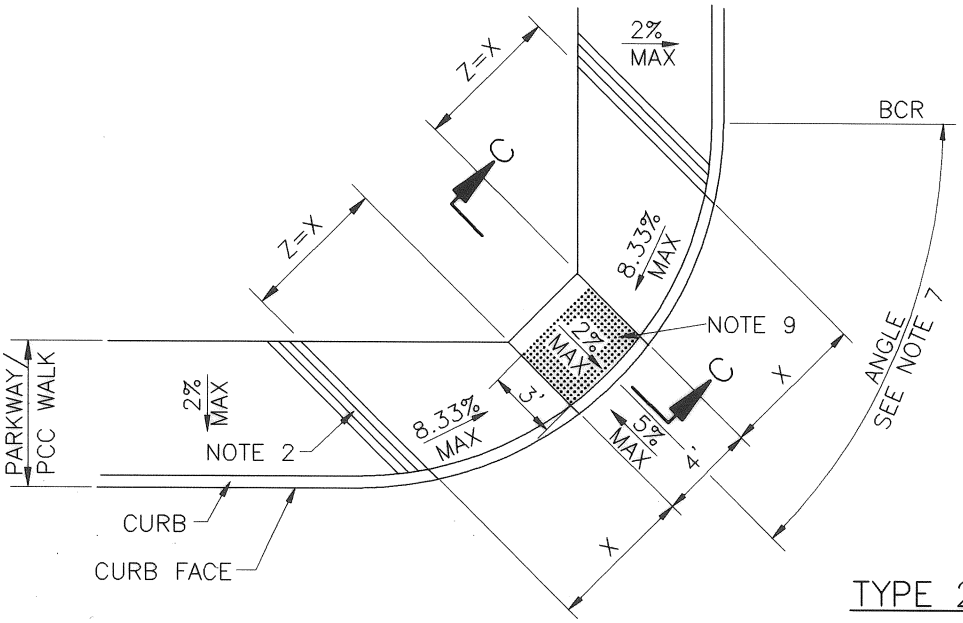

TYPE 2

NOTE:
SEE SHEET 9 FOR NOTES

CASE B

NO.	DATE	CITY OF LONG BEACH, DEPARTMENT OF PUBLIC WORKS 2017 STANDARD PLANS	STANDARD PLAN NO.
4			
3		CURB RAMP	122
2			
1			
REVISIONS		APPROVED BY: _____ CITY ENGINEER R.E. No. 65081 DATE: 11/13/17	SHEET 3 OF 9

SAVED PATH: R:\Standard Plans\CLBSTD_2017\CLB-STD PLAN-2017 MULTI-LAYOUT

SKEW ANGLE a=45°
OFFSET b=0
UNLESS OTHERWISE
NOTED ON PLANS

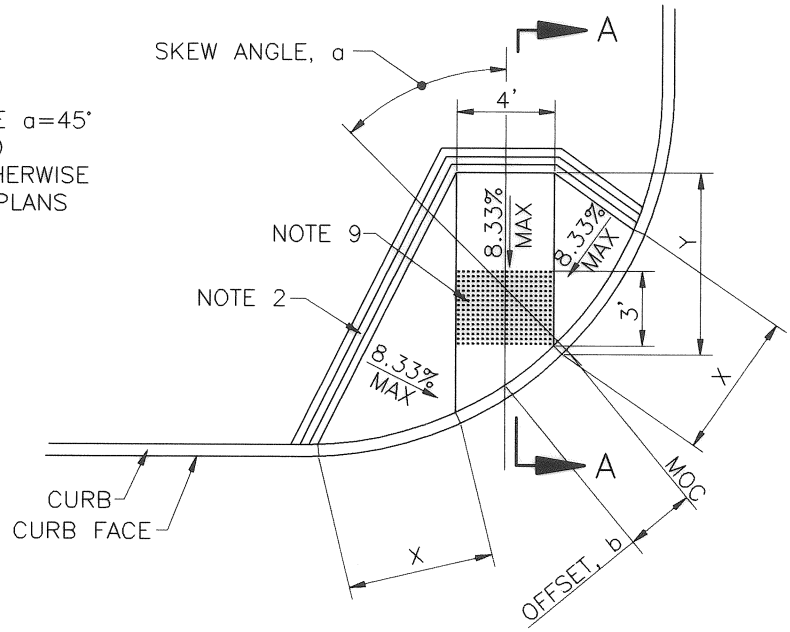

CASE C

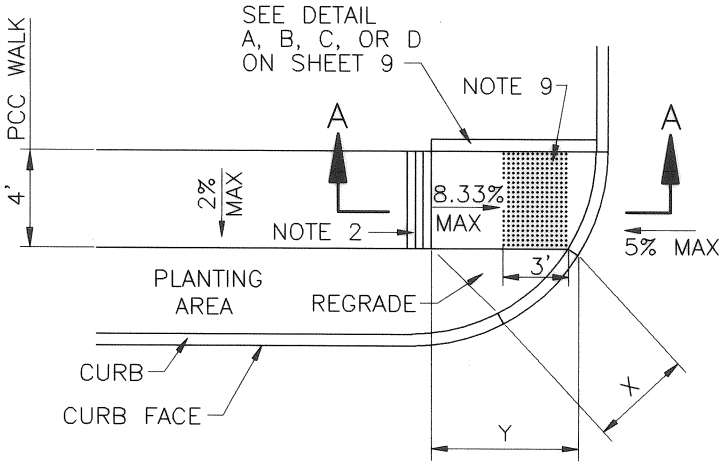

TYPE 1

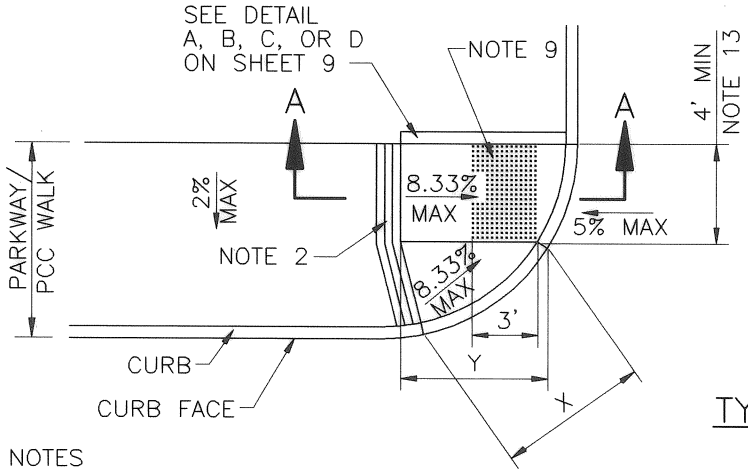

TYPE 2

NOTE:
SEE SHEET 9 FOR NOTES

CASE D

NO.	DATE	REVISIONS
4		
3		
2		
1		

CITY OF LONG BEACH, DEPARTMENT OF PUBLIC WORKS
2017 STANDARD PLANS

CURB RAMP

STANDARD PLAN NO. 122

APPROVED BY: _____ DATE: 11/13/17
CITY ENGINEER R.E. No. 65081

SHEET 4 OF 9

SAVED PATH: R:\Standard Plans\CLBSTD_2017\CLB-STD PLAN-2017 MULTI-LAYOUT

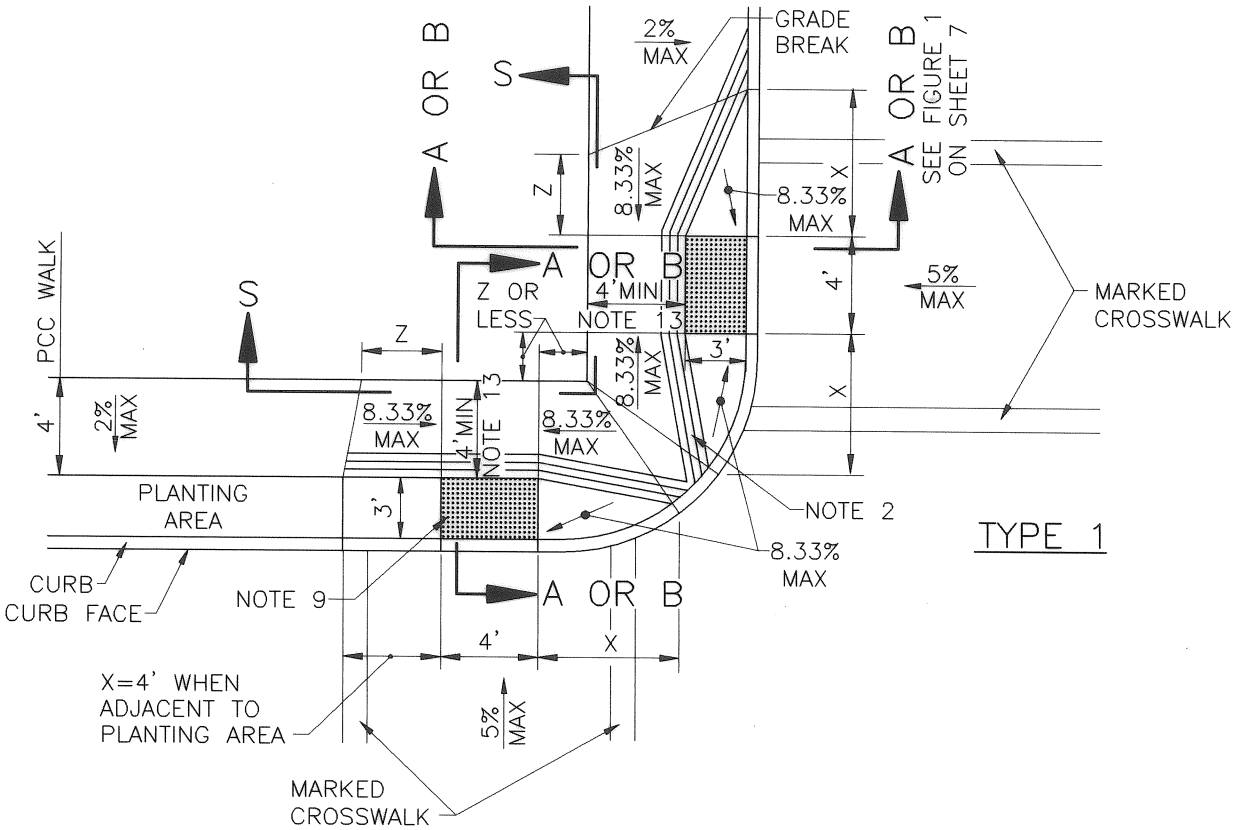

TYPE 1

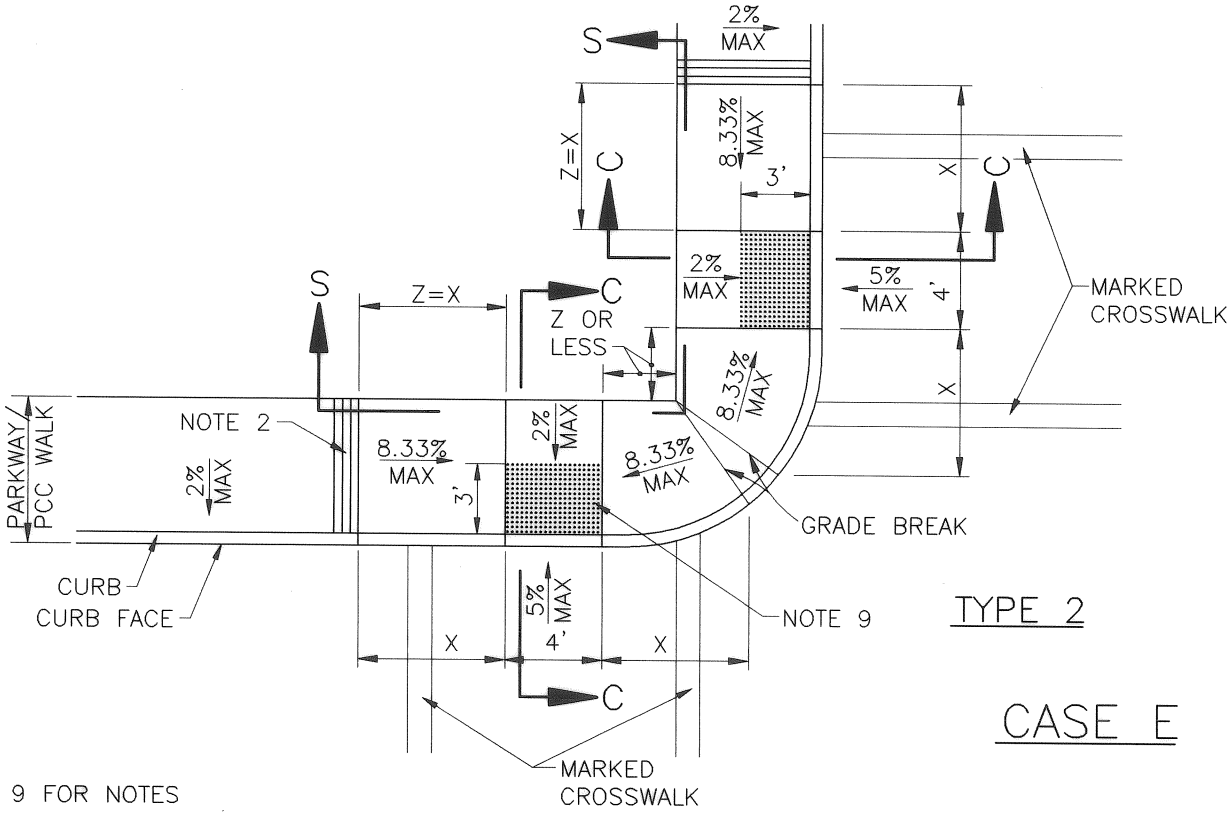

TYPE 2

CASE E

NOTE:
SEE SHEET 9 FOR NOTES

NO.	DATE	CITY OF LONG BEACH, DEPARTMENT OF PUBLIC WORKS 2017 STANDARD PLANS	STANDARD PLAN NO.
4			
3		CURB RAMP	122
2			
1			
REVISIONS		APPROVED BY: _____ CITY ENGINEER R.E. No. 65081 DATE: 11/13/17	SHEET 5 OF 9

SAVED PATH: R:\Standard Plans\CLBSTD_2017\CLB-STD PLAN-2017 MULTI-LAYOUT

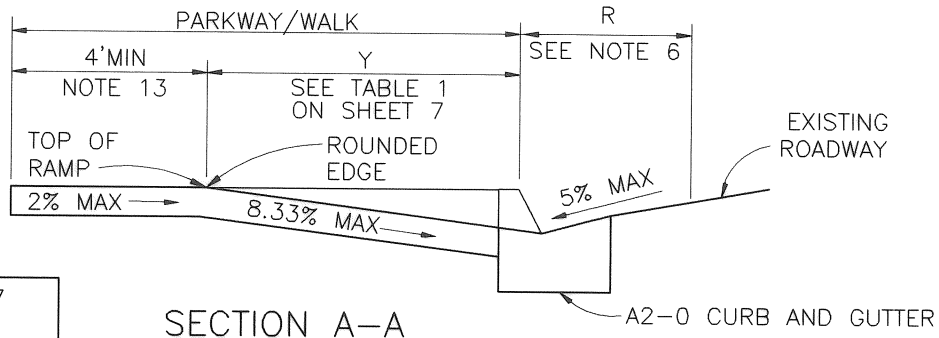

SECTION A–A

USE FIGURE 1 ON SHEET 7 TO DETERMINE WHICH OF SECTIONS A–A, B–B OR C–C IS APPROPRIATE.

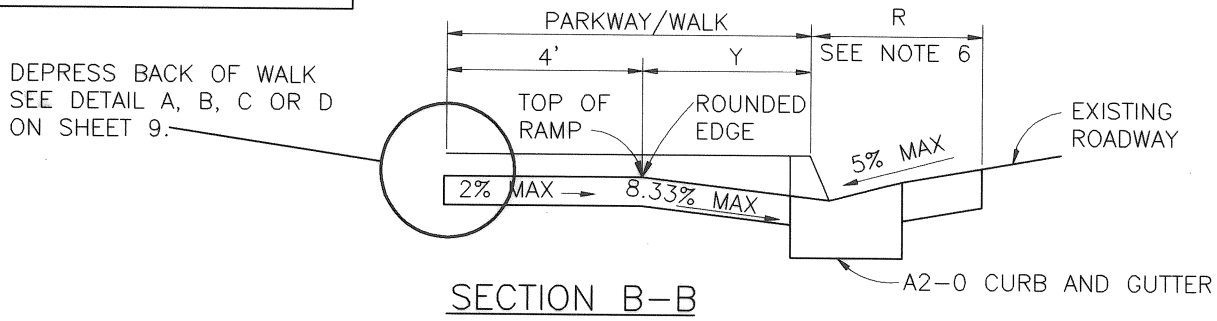

SECTION B–B

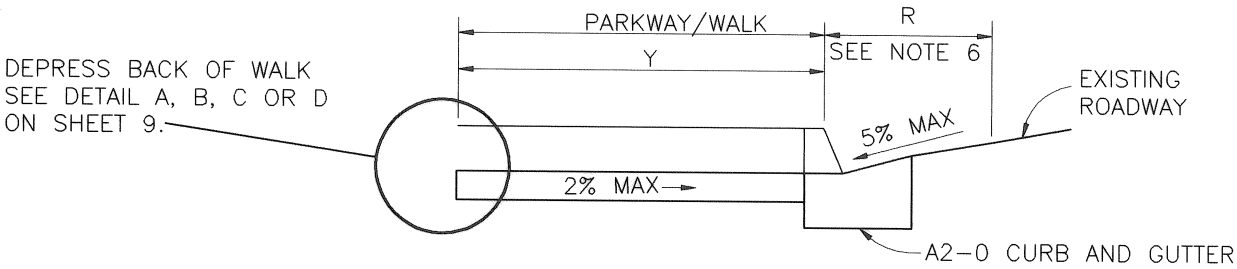

SECTION C–C

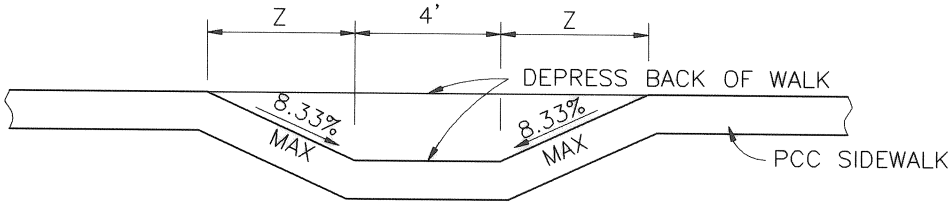

SECTION R–R

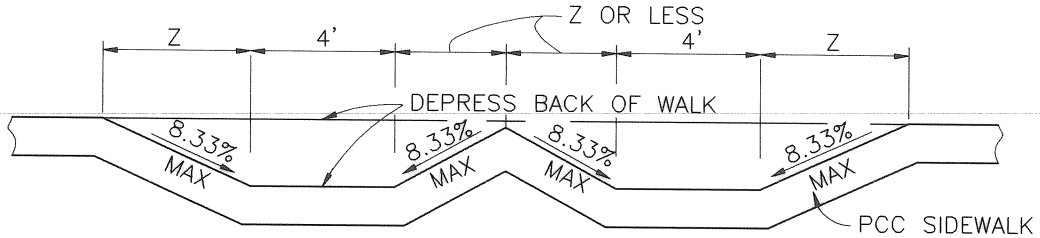

NOTE:
SEE SHEET 9 FOR NOTES

SECTION S–S

NO.	DATE	CITY OF LONG BEACH, DEPARTMENT OF PUBLIC WORKS 2017 STANDARD PLANS	STANDARD PLAN NO.
4			
3		CURB RAMP	122
2			
1			
REVISIONS		APPROVED BY: _____ CITY ENGINEER R.E. No. 65081 DATE: 11/13/17	SHEET 6 OF 9

SAVED PATH: R:\Standard Plans\CLBSTD_2017\CLB-STD PLAN-2017 MULTI-LAYOUT

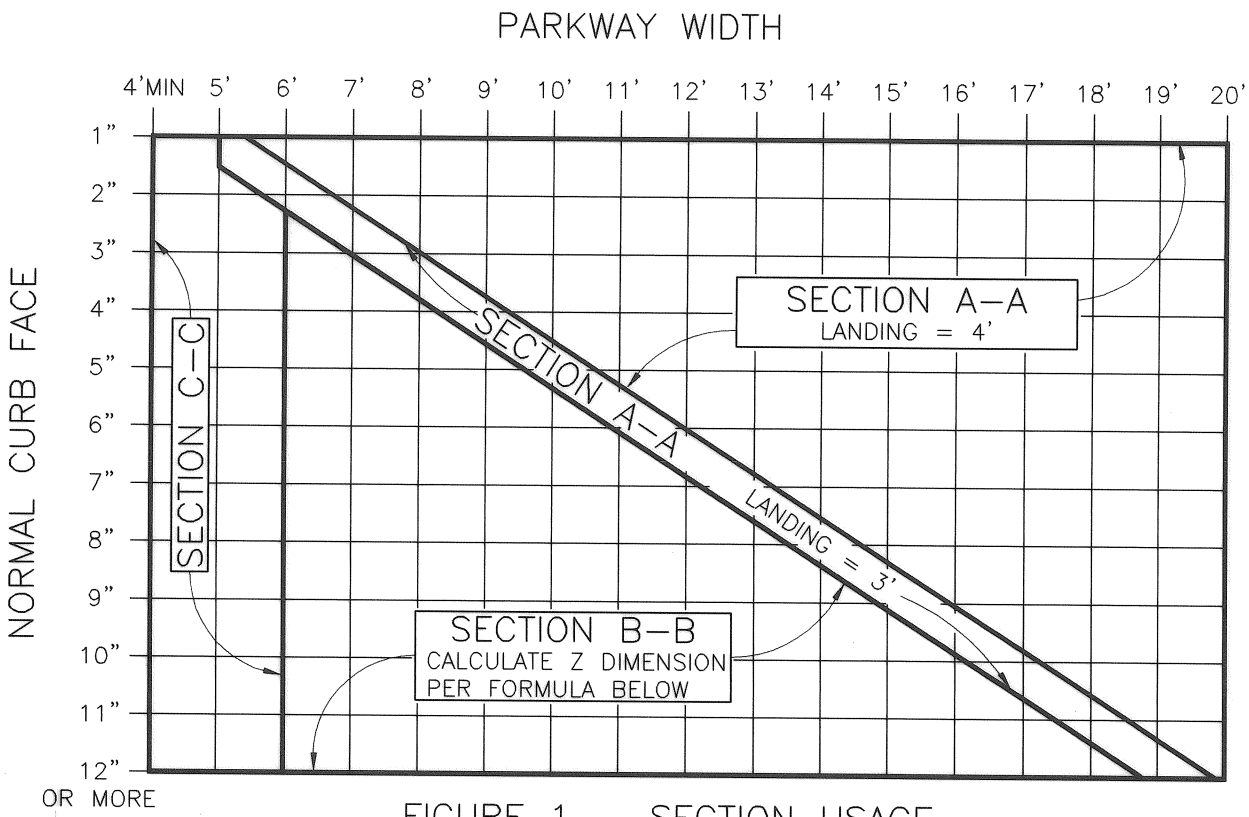

FIGURE 1 – SECTION USAGE

NORMAL CURB FACE, IINCHES	X, FT	Section A–A Y, FT
2"	4.00' MIN	2.63'
3"	4.00' MIN	3.95'
4"	4.00'	5.26'
5"	5.00'	6.58'
6"	6.00'	7.90'
7"	7.00'	9.21'
8"	8.00'	10.53'
9"	9.00'	11.84'
10"	10.00'	13.16'
11"	11.00'	14.74'
12"	12.00'	15.79'

TABLE 1 – X AND Y VALUES

Table 1 Reference Formulas:
X = CF / 8.33%
Y = CF / (8.33%–2.0% Walk Cross Slope)

WHERE FIGURE 1 SHOWS USE OF SECTION B–B, FIGURE Z DIMENSION AS FOLLOWS:

W=PARKWAY WIDTH
L=LANDING WIDTH, 4' TYP, 3' MIN

$Z=[(Y+L)-W] \times 0.760$

IF $(Y+L) < W$, THEN $Z=0$

TABLE 1 SHOWS X FOR A FLARE SLOPE OF 8.33% AT THE CURB FACE. IF L IS 4' OR MORE, X MAY BE MULTIPLIED BY 0.833 FOR A MAXIMUM FLARE SLOPE OF 10% AT THE CURB FACE.

NO.	DATE
4	
3	
2	
1	

REVISIONS

CITY OF LONG BEACH, DEPARTMENT OF PUBLIC WORKS
2017 STANDARD PLANS

CURB RAMP

STANDARD PLAN NO. 122

APPROVED BY: _____ DATE: 11/13/17
CITY ENGINEER R.E. No. 65081

SHEET 7 OF 9

SAVED PATH: R:\Standard Plans\CLBSTD_2017\CLB-STD PLAN-2017 MULTI-LAYOUT

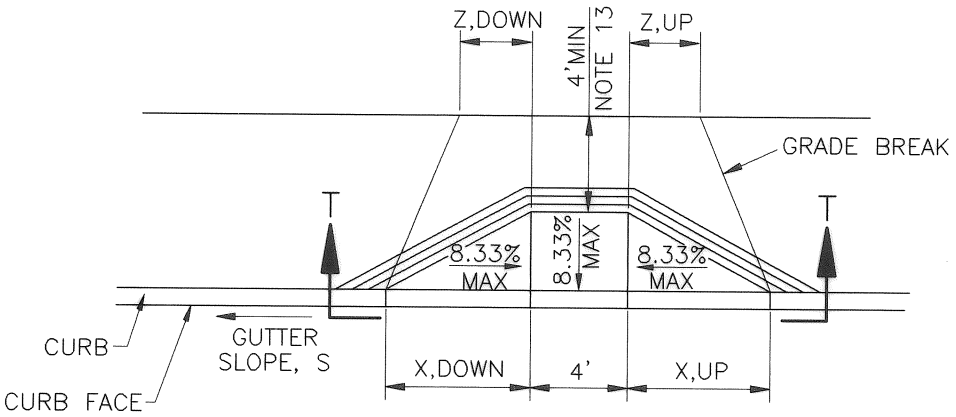

TYPICAL CURB RAMP

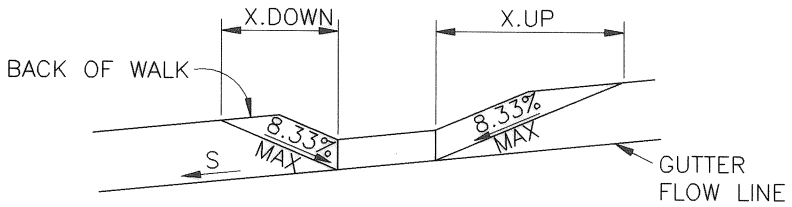

SECTION T–T
SLOPED STREET

FOR SLOPED STREETS, MULTIPLY THE DIMENSIONS PARALLEL TO THE STREET, X AND Z, UPSTREAM AND DOWNSTREAM OF THE RAMP, BY THE FACTORS IN THE FOLLOWING TABLE.

FOR EXAMPLE, X,DOWN = X x K,DOWN

S	K,DOWN	K,UP
0%	1.000	1.000
0.2%	0.977	1.025
0.5%	0.943	1.064
1%	0.893	1.136
2%	0.806	1.316
3%	0.735	1.563
4%	0.676	1.923
5%	0.625	2.500

TABLE 2 – SLOPE ADJUSTMENTS

Table 1 Reference Formulas:
K,DOWN = 8.33% / (8.33% + S)
K,UP = 8.33% / (8.33% − S)

SLOPED STREET ADJUSTMENTS

NO.	DATE
4	
3	
2	
1	

REVISIONS

CITY OF LONG BEACH, DEPARTMENT OF PUBLIC WORKS
2017 STANDARD PLANS

CURB RAMP

STANDARD PLAN NO. 122

APPROVED BY: _____ DATE: 11/13/17
CITY ENGINEER R.E. No. 65081

SHEET 8 OF 9

SAVED PATH: R:\Standard Plans\CLBSTD_2017\CLB-STD PLAN-2017 MULTI-LAYOUT

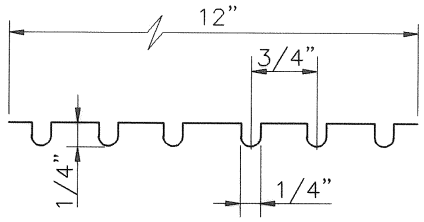

GROOVING DETAIL

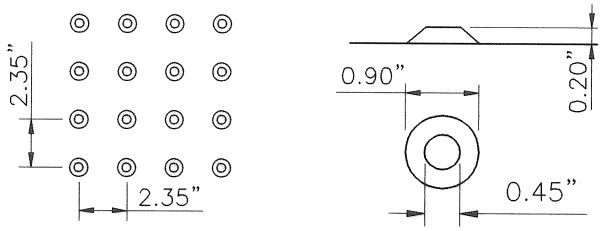

''TRUNCATED DOME'' PATTERN

SINGLE ''TRUNCATED DOME''

DETECTABLE WARNING SURFACE DETAIL

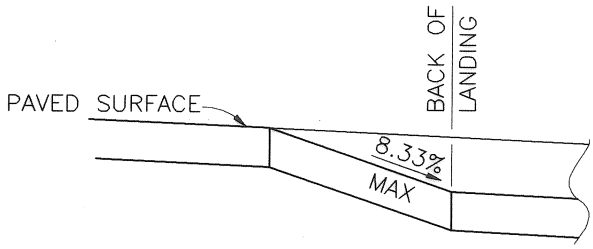

DETAIL A

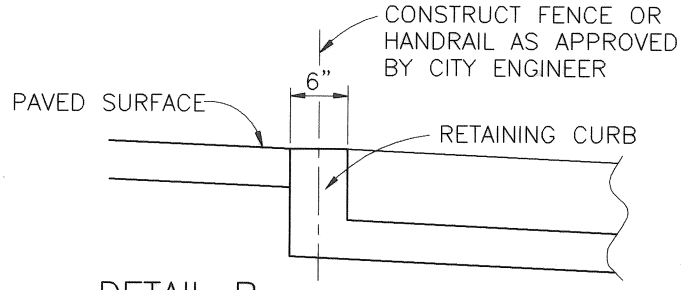

DETAIL B

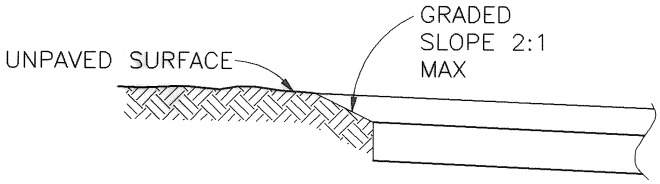

DETAIL C

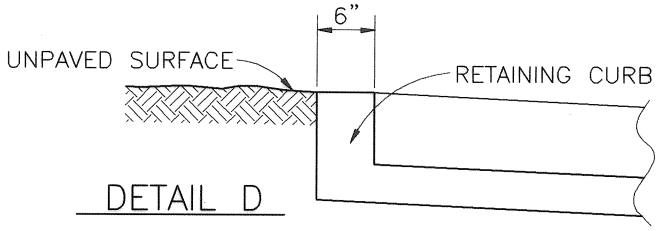

DETAIL D

NOTES:

1. CONCRETE CURB RAMPS SHALL BE CLASS 520-C-2500, 4" THICK FOR LOCAL STREET AND 6" THICK FOR MAJOR STREET.
2. THE RAMP SURFACE SHALL HAVE A 12" WIDE BORDER WITH 1/4" GROOVES APPROXIMATELY 3/4" O.C., SEE GROOVING DETAIL.
3. THE RAMP SURFACE SHALL HAVE A TRANSVERSE BROOMED SURFACE TEXTURE.
4. USE DETAIL ''A'' OR ''B'' IF EXISTING SURFACE BEHIND RIGHT OF WAY IS PAVED.
5. USE DETAIL ''C'' OR ''D'' IF EXISTING SURFACE BEHIND RIGHT OF WAY IS UNPAVED.
6. MAINTAIN MAX 5% APPROACH SLOPE ACROSS DIMENSION R, R = 4' UNLESS OTHERWISE SHOWN ON PLAN.
7. ANGLE = $\Delta/2$ UNLESS OTHERWISE SHOWN ON PLAN, Δ =CURB RETURN CENTRAL ANGLE.
8. SLOPE AT THE FLARED SIDES (SIDE SLOPES) SHALL NOT EXCEED 10% AT THE CURB.
9. CONSTRUCT DETECTABLE WARNING SURFACE PER DETAIL THIS SHEET. MATERIAL SHALL BE PER CONTRACT DOCUMENTS OR PERMIT REQUIREMENTS. NEWLY INSTALLED DETECTABLE WARNING SURFACE SHALL BE WET SET IN CONCRETE.
10. WHEN RETROFITTING EXISTING CURB RAMPS, USE APPROVED GLUE- AND PAINT-DOWN DETECTABLE WARNING SURFACE. MATERIAL SHALL BE PER CONTRACT DOCUMENTS OR PERMIT REQUIREMENTS.
11. DETECTABLE WARNING SURFACE SHALL BE FEDERAL YELLOW.
12. INSTALL DETECTABLE WARNING SURFACE FLUSH AT CORNERS AND ALONG SEAMS TO ADJACENT FACILITIES.
13. WALK LESS THAN 4' MINIMUM (AS SHOWN) REQUIRES CITY ENGINEER'S APPROVAL.

NO.	DATE	REVISIONS
4		
3		
2		
1		

CITY OF LONG BEACH, DEPARTMENT OF PUBLIC WORKS
2017 STANDARD PLANS

CURB RAMP

STANDARD PLAN NO. 122

APPROVED BY: _____ DATE: 11/13/17
CITY ENGINEER R.E. No. 65081

SHEET 9 OF 9

SAVED PATH: R:\Standard Plans\CLBSTD_2017\CLB-STD PLAN-2017 MULTI-LAYOUT