Appendix F

Geotechnical Investigation

GEOTECHNICAL INVESTIGATION
TWO PROPOSED COMMERCIAL/INDUSTRIAL BUILDINGS

East Side of Studebaker Road at Loynes Avenue
Long Beach, California
for
PDC LA/SD LLC

SOUTHERN CALIFORNIA GEOTECHNICAL
A California Corporation

July 8, 2019

PDC LA/SD LLC
20411 SW Birch Street, Suite 200
Newport Beach, California 92660

SOUTHERN CALIFORNIA GEOTECHNICAL
A California Corporation

Attention: Mr. Ryan Jones

Project No.: **16G136-1**

Subject: **Geotechnical Investigation**
Two Proposed Commercial/Industrial Buildings
East side of Studebaker Road at Loynes Drive
Long Beach, California

Gentlemen:

In accordance with your request, we have conducted a geotechnical investigation at the subject site. We are pleased to present this report summarizing the conclusions and recommendations developed from our investigation.

We sincerely appreciate the opportunity to be of service on this project. We look forward to providing additional consulting services during the course of the project. If we may be of further assistance in any manner, please contact our office.

Respectfully Submitted,

SOUTHERN CALIFORNIA GEOTECHNICAL, INC.

Daniel W. Nielsen, RCE 77915
Senior Engineer

REGISTERED PROFESSIONAL ENGINEER
DANIEL W. NIELSEN
No. 77915
CIVIL
STATE OF CALIFORNIA

Robert G. Trazo, GE 2655
Principal Engineer

REGISTERED PROFESSIONAL ENGINEER
ROBERT TRAZO
No. 2655
GEOTECHNICAL
STATE OF CALIFORNIA

Distribution: (2) Addressee

TABLE OF CONTENTS

1.0 EXECUTIVE SUMMARY 1

2.0 SCOPE OF SERVICES 4

3.0 SITE AND PROJECT DESCRIPTION 5

3.1 Site Conditions 5
3.2 Proposed Development 5
3.3 Previous Studies 6

4.0 SUBSURFACE EXPLORATION 8

4.1 Scope of Exploration/Sampling Methods 8
4.2 Geotechnical Conditions 9

5.0 LABORATORY TESTING 11

6.0 CONCLUSIONS AND RECOMMENDATIONS 13

6.1 Seismic Design Considerations 13
6.2 Geotechnical Design Considerations 17
6.3 Site Grading Recommendations 19
6.4 Construction Considerations 22
6.5 Foundation Design and Construction Alternative 1 - Driven Pile Foundations 24
6.6 Foundation Design and Construction Alternative 2 – Drilled Pier Foundations 27
6.7 Floor Slab Design and Construction 31
6.8 Retaining Wall Design and Construction 32
6.9 Pavement Design Parameters 34

7.0 GENERAL COMMENTS 37

8.0 REFERENCES 38

APPENDICES

A Plate 1: Site Location Map
Plate 2: Boring and CPT Location Plan
B Boring Logs
C Laboratory Test Results
D Grading Guide Specifications
E Seismic Design Parameters
F Liquefaction Evaluation Spreadsheets
G CPT Data Report
H All Pile Program Output

1.0 EXECUTIVE SUMMARY

Presented below is a brief summary of the conclusions and recommendations of this investigation. Since this summary is not all inclusive, it should be read in complete context with the entire report.

Geotechnical Design Considerations

- The results of the liquefaction evaluation indicate that total dynamic settlements on the order of 0.9 to 3.1± inches could occur at the site during the design seismic event at the boring locations. The liquefaction induced differential settlements are expected to be on the order of 1 to 2± inches.
- Groundwater was encountered at depths of 8 to 13± feet at the boring locations.
- All of the borings encountered a surficial layer of fill soils underlain by loose/soft native alluvium. The fill extends to depths of 4½ to 6½± feet at the boring locations. The upper zone of alluvium possesses a moderate to severe potential for consolidation settlement. Low strength, compressible, highly organic soils are present at the boring locations, extending to depths of 12 to 18± feet. In their present condition, these soils are not considered suitable for the support of the proposed structures.
- Based on the relatively shallow depths to groundwater, it is not considered practical to remove the highly organic and compressible soils from within the proposed building areas and replace them with compacted structural fill materials. Therefore, we recommend that the buildings be supported on a deep foundation system consisting of driven piles or drilled concrete piers.
- Alternatively, it may also be feasible to mitigate potential static and dynamic settlement using ground improvement techniques. We understand that the client is considering the use of ground improvement techniques, including a method identified as vibro-replacement stone columns.
- As of the writing of this report, we understand that no design of the proposed ground improvement has been performed. It is recommended that SCG be provided with copies of the preliminary ground improvement plans, when they become available, for review with regard to the conclusions, recommendations, and assumptions contained within this report.

Site Preparation Recommendations

- Initial site preparation should include stripping of the existing grass and weed growth present at the site. The actual extent of site stripping should be determined in the field by the geotechnical engineer, based on the organic content and stability of the materials encountered.
- Demolition of the above ground pipelines and asphaltic concrete pavements will be necessary at this site. Any remnants of the previous improvements, including foundations, slabs, and the debris resulting from demolition activities should also be demolished and properly disposed of off-site. Concrete and asphalt debris may be re-used within compacted fills, provided they are pulverized and the maximum particle size is less than 2 inches. Such materials should be thoroughly blended with on-site soils prior to use as fill.
- Limited remedial grading is recommended to be performed within the proposed building pad areas in order to facilitate the construction of the proposed buildings. The existing soils within the proposed building areas should be overexcavated to a depth of 1 foot below the existing grade and to a depth of at least 1 foot below the proposed building pad subgrade elevation.

- The previously excavated soils may be replaced as compacted structural fill, with the exception of any soils possessing appreciable organic content. Structural fill soils should be compacted at least 90 percent of the ASTM D-1557 maximum dry density.
- New parking area subgrade soils are recommended to be scarified to a depth of 12± inches, thoroughly moisture conditioned and recompacted to at least 90 percent of the ASTM D-1557 maximum dry density.

Building Foundation Design Recommendations

- Deep foundation system consisting of driven reinforced concrete piles or drilled concrete piers.
- Based on variable soil strengths and compositions, and the varying extent of highly organic soils and/or liquefiable soils, the site has been divided into three zones with respect to the deep foundation design. Zone A consists of the south half of the southern proposed building. Zone B consists of the north half of the southern building. Zone C consists of the northern building.
- Deep foundation elements should be extended to the following depths in order to be embedded 5 feet into dense to very dense, non-liquefiable sands:
    - Zone A: 40 feet
    - Zone B: 47 feet
    - Zone C: 45 feet
- Allowable axial capacities have been provided for 14-inch square reinforced concrete piles in Section 6.5 of this report.
- Allowable axial capacities have been provided for drilled pier foundations of various diameters and lengths in Section 6.6 of this report.

Building Floor Slab Design Recommendations

- Structural floor slab supported on the deep foundation system, minimum 5 inches thick.
- The floor slab reinforcement should be determined by the structural engineer, based on the imposed slab loading and the potential liquefaction settlements. However, the minimum floor slab reinforcement should consist of No. 3 rebars spaced at 18-inches on center in both directions, due to the presence of low to medium expansive soils.

Pavements

ASPHALT PAVEMENTS (R = 10)					
Materials	**Thickness (inches)**				
	Automobile Parking (TI = 4.0)	Automobile Drive Lanes (TI = 5.0)	Truck Traffic		
			(TI = 6.0)	(TI = 7.0)	(TI = 8.0)
Asphalt Concrete	3	3	3½	4	5
Aggregate Base	6	9	12	15	16
Compacted Subgrade	12	12	12	12	12

PORTLAND CEMENT CONCRETE PAVEMENTS			
Materials	**Thickness (inches)**		
	Automobile and Light Truck Traffic (TI = 5.0 & 6.0)	Truck Traffic	
		(TI = 7.0)	(TI = 8.0)
PCC	5½	7	8
Compacted Subgrade (95% minimum compaction)	12	12	12

2.0 SCOPE OF SERVICES

The scope of services performed for this project was in accordance with our Proposal No. 16P143, dated February 11, 2016. The scope of services included a visual site reconnaissance, subsurface exploration, field and laboratory testing, and geotechnical engineering analysis to provide criteria for preparing the design of the building foundations, building floor slabs, and parking lot pavements along with site preparation recommendations and construction considerations for the proposed development. Based on the location of the subject site, this investigation also included a site-specific liquefaction evaluation. The evaluation of the environmental aspects of this site was beyond the scope of services for this geotechnical investigation.

3.0 SITE AND PROJECT DESCRIPTION

3.1 Site Conditions

The subject site is located on the east side of Studebaker Road at Loynes Drive in Long Beach, California. The site is bounded to the north and south by the Los Cerritos channel, to the east by a vacant lot which was formerly developed with large tanks and pipelines as a part of an oil refinery, and to the west by Studebaker Road. The general location of the site is illustrated on the Site Location Map, included as Plate 1 of this report.

The site consists of a rectangular-shaped parcel, 8.5± acres in size. Based on information provided by the client, the site was formerly developed as part of the surrounding oil refinery and was developed with two large above ground storage tanks (ASTs). The tanks were 160± feet in diameter and 40± feet in height. Based on historical photographs from google earth, it appears that the tanks were removed after September 2010. Presently, the site is vacant, with some remnants of the former development. These include areas of asphaltic concrete pavements which are presently in very poor condition, several above ground pipelines located near the eastern property line which traverse the site from north to south, and abandoned above ground pipes with diameters of 1 to 2± feet which extend from the former AST pads to the existing pipelines in the eastern portion of the site. The majority of the site is surrounded by berms on the north, south, east, and west sides. A berm is also present in the center of the site, between the two former tank areas. The berms are approximately 9 feet high, and possess side slopes with inclinations of approximately 1h:1v to 1½h:1v. These berms are generally located near the property lines, except for the eastern berm, which is located on the west side of the existing above ground pipelines. The berms appear to be capped with asphalt which is in poor condition with severe cracking throughout. Ground surface within the tank areas appears to consist of aggregate base and/or open-graded gravel. The ground surface cover throughout the remainder of the site consists of asphalt pavements with severe cracking and areas of sparse to moderate weed growth and a few small trees.

Topographic information for the site was obtained from a plan entitled Boundary and Topo Exhibit, prepared by Proactive Engineering Consultants. The survey indicates that the overall site topography slopes downward gently away from former AST pads toward the containment berms. The maximum site elevation is 18.6± feet mean sea level (msl) at the top of the berm located in the western region of the subject site, and the minimum site elevation is 7.6± feet msl in the southwest corner of the subject site at the bottom of the berm.

3.2 Proposed Development

Based on a preliminary site plan provided to our office by the client, the site will be developed with two (2) new commercial/industrial buildings. Building 1 will be located in the southern portion of the site and will have a footprint of 92,000± ft^2. Building 2 will be located in the northern portion of the site and will have a footprint of 53,000± ft^2. Dock high doors will be constructed

on the east sides of both buildings. Building 1 will also include an 11,000± ft^2 second floor mezzanine and Building 2 will also include a 6,500± ft^2 second floor mezzanine. The buildings will be surrounded by asphaltic concrete in the parking and drive areas and Portland cement concrete pavements in the truck court areas.

Detailed structural information has not been provided. It is assumed that the buildings will be single story structures of tilt-up concrete construction with areas of second story mezzanines. We expect that the buildings will be supported on a deep foundation system consisting of drilled concrete piers foundations or driven piles. Based on the assumed construction, maximum column and wall loads are expected to be on the order of 80 kips and 3 to 4 kips per linear foot, respectively. Due to the poor support characteristics of the on-site soils and the anticipated loading for a building of this type, we expect that the floor slab will consist of a structural slab which is ultimately supported by the deep foundation system.

The proposed development is not expected to include any significant amounts of below grade construction such as basements or crawl spaces. Based on the existing site topography and assuming a relatively level site, cuts and fills of up to 3± feet are expected to be necessary to achieve the proposed building pad grades.

3.3 Previous Studies

As part of the preliminary project information, the client provided a geotechnical investigation report prepared by Geotechnical Professionals Inc. (GPI) for the subject site and the adjacent property located east of the subject site. This report was dated September 29, 2003. The proposed site development at the time of the report included the construction of a Home Depot building. The majority of the proposed building was to be located in the property adjacent to the subject site of the current geotechnical investigation, in the southeast portion of the overall site. The subsurface exploration for the GPI investigation consisted of six borings and six cone penetration tests (CPTs). The borings were advanced to depths ranging between 10 and 71± feet and the CPTs were advanced to depths of 10 to 65± feet. Since most of the new building area was proposed for the eastern portion of the overall site, most of the subsurface exploration was not performed within the subject site for the current geotechnical investigation. However, GPI did perform one boring and one CPT within the subject area for the current investigation, which were advanced to depths of 51 and 65± feet respectively.

GPI Boring B-2 was performed southeast of the former tank location in the southern portion of the subject site for the current geotechnical investigation. CPT-6 was performed northeast of the same tank. The geotechnical conditions at GPI Boring B-2 were generally similar to the geotechnical conditions encountered at Boring No. B-1 for the present investigation. GPI Boring B-2 encountered fill soils consisting of silty sands in the upper 4 feet underlain by low strength alluvial sands, clays, silts, and organic soils within the upper 25± feet. At greater depths, the alluvium consisted of dense to very dense silty sands and sands.

Laboratory testing performed by GPI included Moisture Content and Dry Density, Expansion Index testing, Limited Grain Size Distribution, Atterberg Limits (ASTM D-4318), Direct Shear Testing, Maximum Dry Density and Optimum Moisture content, and Consolidation (ASTM D-2435). Moisture content and dry density testing was performed on samples taken at all of the boring

locations, however, the majority of the remaining laboratory testing was performed on samples taken from GPI Borings B-1 and B-2, which were performed on the adjacent property to the east of the current subject site.

GPI also submitted a sample to be analyzed by an analytical laboratory. GPI utilized the results of these tests to determine the potential corrosivity of the on-site soils. A summary of pertinent test results is presented in the following table:

Sample Identification	**Resistivity** (ohm-cm)	**pH**	**Sulfate** (mg/kg)	**Chlorides** (mg/kg)
B-2 @1-6 feet	3,000	7.7	2,532	1,330

Expansion index testing was performed on soils from the upper 1 to 6± feet at Boring No. B-2. The result of this test indicates that the near surface soils at this boring location possess a high expansion index (EI = 105). GPI also performed expansion index testing on soils taken from the berms. The results of these tests indicate that the berms are composed of soils possessing very low to medium expansion potentials (EI = 7 and 75).

Based on the standards in place at the time of the GPI Report, GPI calculated potential liquefaction settlements of ½ to ¾-inches. GPI indicated that lateral spreading was not a design issue for this site, due to the lack of continuity of the liquefiable layers.

4.0 SUBSURFACE EXPLORATION

4.1 Scope of Exploration/Sampling Methods

The subsurface exploration conducted for this project consisted of six (6) borings (identified as Boring Nos. B-1 through B-6) advanced to depths of 5 to 51½± feet below the existing site grades. Boring Nos. B-1 through B-4 were extended to depths of 50 to 51½± feet as part of the liquefaction evaluation. All of the borings were logged during drilling by a member of our staff. In addition to the borings, four (4) cone penetration test (CPT) soundings were performed at the site.

Hollow Stem Auger Borings

The borings were advanced with hollow-stem augers, by a limited access track-mounted drilling rig. Representative bulk and undisturbed soil samples were taken during drilling. Relatively undisturbed samples were taken with a split barrel "California Sampler" containing a series of one inch long, 2.416± inch diameter brass rings. This sampling method is described in ASTM Test Method D-3550. Undisturbed samples were also taken using a 1.4± inch inside diameter split spoon sampler, in general accordance with ASTM D-1586. Both of these samplers were driven into the ground with successive blows of a 140-pound weight falling 30 inches. The blow counts obtained during driving are recorded for further analysis. Bulk samples were collected in plastic bags to retain their original moisture content. The relatively undisturbed ring samples were placed in molded plastic sleeves that were then sealed and transported to our laboratory.

Cone Penetration Test (CPT) Soundings

The CPT soundings were performed by Kehoe Testing and Engineering (KTE) under the supervision of an SCG engineer. The cone system used for this project was manufactured by Vertek. The CPT soundings were performed in general accordance with ASTM standards (D-5778). The cone penetrometers were pushed using 30-ton CPT rig. The cones used during the program recorded the cone resistance, sleeve friction, and dynamic core pressure at 2.5 centimeter depth intervals. The CPT soundings were advanced to depths of 50± feet. A more complete description of the CPT program as well as the results of the data interpretation are enclosed in Appendix G of this report. The CPT soundings do not result in any recovered soil samples. However, correlations have been developed that utilize the cone resistance and the sleeve friction to estimate the soil type that is present at each 2.5 centimeter interval in the subsurface profile. These soil classifications are presented graphically on the CPT output forms enclosed in Appendix G.

The raw data generated by the cone penetrometer equipment has been reduced using CPeT-IT, V1.6, published by Geologismiki Geotechnical Software. The CPeT-IT program output as well as more details regarding the interpretation procedure are presented a report prepared by KTE, which is provided in Appendix G of this report.

General

The approximate locations of the borings and CPT soundings are indicated on the Boring and CPT Location Plan, included as Plate 2 in Appendix A of this report. The Boring Logs, which illustrate the conditions encountered at the boring locations, as well as the results of some of the laboratory testing, are included in Appendix B.

4.2 Geotechnical Conditions

Artificial Fill

Artificial fill soils were encountered at the ground surface at all of the boring locations extending to depths of 4½ to 6½± feet below the existing site grades. The fill soils generally consist of loose to medium dense sandy silts and silty sands with varying clay content, and medium stiff to stiff clayey silts with trace fine sand content. The fill soils possess a disturbed appearance and some samples contain minor debris, such as asphaltic concrete fragments, resulting in their classification as artificial fill. Occasional samples of the fill materials possessed appreciable organic content.

Alluvium

Native alluvium was encountered beneath the artificial fill soils at all of the boring locations, except boring Nos. B-5 and B-6, which were terminated in artificial fill soils at depths of 5± feet below the existing site grades. The near surface alluvial soils within the upper 12 to 19½± feet generally possess low strengths, appreciable organic content, and consist of interbedded layers of very soft to stiff clayey silts, and loose to medium dense clayey fine sands. At greater depths, the subsurface conditions varied considerably at the boring locations. Boring No. B-1 encountered loose to medium dense silty fine sands, fine sandy silts, and fine to medium sands between depths of 19½ to 34½± feet. Boring No. B-2 encountered medium dense silty fine sands, fine to medium sands, clayey fine sands, and very stiff clayey silts between depths of 12 and 25± feet. These soils were underlain by highly plastic silts between depths of 25 and 42± feet. Boring Nos. B-3 and B-4 encountered loose to medium dense clayey fine sands and fine to medium sands between depths of 12 and 22 to 28± feet. These soils were underlain by very stiff silty clays and clayey silts, extending to a depth of 32± feet at Boring No. B-3 and 39½± feet at Boring No. B-4. All of the borings encountered dense to very dense fine sands, fine to medium sands and silty fine to medium sands at depths of 32 to 42±. These dense to very dense sandy soils extended to at least the maximum depths explored (50 to 51½± feet) at Boring Nos. B-1 through B-4.

Groundwater

Free water was encountered at Boring Nos B-1 through B-4, inclusive, between depths of 8 and 12± feet below the existing site grades. Based on the moisture contents of the recovered soil samples and the water measurements taken within the open boreholes, the static groundwater table is considered to have been present at depths of 8 to 12± feet below the existing site grades at the time of subsurface exploration.

As part of our research, we reviewed available groundwater data in order to determine the historic high groundwater level for the site. The primary reference used to determine the historic groundwater depths in this area is CGS Seismic Hazard Zone Report (SHZR) 028, the Seismic Hazard Zone Report for the Long Beach 7.5 Minute Quadrangle, Los Angeles County, California which indicates that the historic high groundwater level for the site was 8± feet below the ground surface.

5.0 LABORATORY TESTING

The soil samples recovered from the subsurface exploration were returned to our laboratory for further testing to determine selected physical and engineering properties of the soils. The tests are briefly discussed below. It should be noted that the test results are specific to the actual samples tested, and variations could be expected at other locations and depths.

Classification

All recovered soil samples were classified using the Unified Soil Classification System (USCS), in accordance with ASTM D-2488. Field identifications were then supplemented with additional visual classifications and/or by laboratory testing. The USCS classifications are shown on the Boring Logs and are periodically referenced throughout this report.

Dry Density and Moisture Content

The dry density has been determined for selected relatively undisturbed ring samples. These densities were determined in general accordance with the method presented in ASTM D-2937. The results are recorded as dry unit weight in pounds per cubic foot. The moisture contents are determined in accordance with ASTM D-2216, and are expressed as a percentage of the dry weight. These test results are presented on the Boring Logs.

Consolidation

Selected soil samples have been tested to determine their consolidation potential, in accordance with ASTM D-2435. The testing apparatus is designed to accept either natural or remolded samples in a one-inch high ring, approximately 2.416 inches in diameter. Each sample is then loaded incrementally in a geometric progression and the resulting deflection is recorded at selected time intervals. Porous stones are in contact with the top and bottom of the sample to permit the addition or release of pore water. The samples are typically inundated with water at an intermediate load to determine their potential for collapse or heave. The results of the consolidation testing are plotted on Plates C-1 through C-8 in Appendix C of this report.

Grain Size Analysis

Limited grain size analyses have been performed on several selected samples, in accordance with ASTM D-1140. These samples were washed over a #200 sieve to determine the percentage of fine-grained material in each sample, which is defined as the material which passes the #200 sieve. The weight of the portion of the sample retained on each screen is recorded and the percentage finer or coarser of the total weight is calculated. The results of these laboratory tests are shown on the attached boring logs.

Atterberg Limits

Atterberg Limits testing (ASTM D-4318) was performed on selected samples of various soil strata encountered at the site. This test is used to determine the Liquid Limit and Plastic Limit of the

soil. The Plasticity Index is the difference between the two limits. Plasticity Index is a general indicator of the expansive potential of the soil, with higher numbers indicating higher expansive potential. Soils with a PI greater than 25 are considered to have a high plasticity, and a high expansion potential. Non-sensitive soils with a PI greater than 18 are not considered to be susceptible to liquefaction when the moisture content of the soil is less than 80 percent of the liquid limit. The results of the Atterberg Limits testing are presented on the boring logs.

Soluble Sulfates

Representative samples of the near-surface soils were submitted to a subcontracted analytical laboratory for determination of soluble sulfate content. Soluble sulfates are naturally present in soils, and if the concentration is high enough, can result in degradation of concrete which comes into contact with these soils. The results of the soluble sulfate testing are presented below, and are discussed further in a subsequent section of this report.

Sample Identification	**Soluble Sulfates (%)**	**ACI Classification**
B-1 @ 0 to 5 feet	0.121	Moderate
B-4 @ 0 to 5 feet	0.003	Negligible

Maximum Dry Density and Optimum Moisture Content

A representative bulk sample was tested for its maximum dry density and optimum moisture content. The results have been obtained using the Modified Proctor procedure, per ASTM D-1557. These tests are generally used to compare the in-situ densities of undisturbed field samples, and for later compaction testing. Additional testing of other soil type or soil mixes may be necessary at a later date. The results of the testing are plotted on Plate C-9 in Appendix C of this report.

Expansion Index

The expansion potential of the on-site soils was determined in general accordance with ASTM D-4829. The testing apparatus is designed to accept a 4-inch diameter, 1-in high, remolded sample. The sample is initially remolded to 50± 1 percent saturation and then loaded with a surcharge equivalent to 144 pounds per square foot. The sample is then inundated with water, and allowed to swell against the surcharge. The resultant swell or consolidation is recorded after a 24-hour period. The results of the EI testing are as follows:

Sample Identification	**Expansion Index**	**Expansive Potential**
B-1 @ 0 to 5 feet	40	Low
B-4 @ 0 to 5 feet	54	Medium

6.0 CONCLUSIONS AND RECOMMENDATIONS

Based on the results of our review, field exploration, laboratory testing and geotechnical analysis, the proposed development is considered feasible from a geotechnical standpoint. The recommendations contained in this report should be taken into the design, construction, and grading considerations.

The recommendations are contingent upon all grading and foundation construction activities being monitored by the geotechnical engineer of record. The recommendations are provided with the assumption that an adequate program of client consultation, construction monitoring, and testing will be performed during the final design and construction phases to verify compliance with these recommendations. Maintaining Southern California Geotechnical, Inc., (SCG) as the geotechnical consultant from the beginning to the end of the project will provide continuity of services. The geotechnical engineering firm providing testing and observation services shall assume the responsibility of Geotechnical Engineer of Record.

The Grading Guide Specifications, included as Appendix D, should be considered part of this report, and should be incorporated into the project specifications. The contractor and/or owner of the development should bring to the attention of the geotechnical engineer any conditions that differ from those stated in this report, or which may be detrimental for the development.

6.1 Seismic Design Considerations

The subject site is located in an area which is subject to strong ground motions due to earthquakes. The performance of a site-specific seismic hazards analysis was beyond the scope of this investigation. However, numerous faults capable of producing significant ground motions are located near the subject site. Due to economic considerations, it is not generally considered reasonable to design a structure that is not susceptible to earthquake damage. Therefore, significant damage to structures may be unavoidable during large earthquakes. The proposed structure should, however, be designed to resist structural collapse and thereby provide reasonable protection from serious injury, catastrophic property damage and loss of life.

Faulting and Seismicity

Research of available maps indicates that the subject site is not located within an Alquist-Priolo Earthquake Fault Zone. Therefore, the possibility of significant fault rupture on the site is considered to be low.

Seismic Design Parameters

The 2016 California Building Code (CBC) was adopted by all municipalities within Southern California on January 1, 2017. The CBC provides procedures for earthquake resistant structural design that include considerations for on-site soil conditions, occupancy, and the configuration of the structure including the structural system and height. The seismic design parameters

presented below are based on the soil profile and the proximity of known faults with respect to the subject site.

The 2016 CBC Seismic Design Parameters have been generated using U.S. Seismic Design Maps, a web-based software application developed by the United States Geological Survey. This software application, available at the USGS web site, calculates seismic design parameters in accordance with the 2016 CBC, utilizing a database of deterministic site accelerations at 0.01 degree intervals. The table below is a compilation of the data provided by the USGS application. A copy of the output generated from this program is included as Plate E-1 in Appendix E of this report. A copy of the Design Response Spectrum, as generated by the USGS application is also included in Appendix E. Based on this output, the following parameters may be utilized for the subject site:

2016 CBC SEISMIC DESIGN PARAMETERS

Parameter		Value
Mapped Spectral Acceleration at 0.2 sec Period	S_S	1.562
Mapped Spectral Acceleration at 1.0 sec Period	S_1	0.582
Site Class	---	F*
Site Modified Spectral Acceleration at 0.2 sec Period	S_{MS}	1.562
Site Modified Spectral Acceleration at 1.0 sec Period	S_{M1}	0.873
Design Spectral Acceleration at 0.2 sec Period	S_{DS}	1.041
Design Spectral Acceleration at 1.0 sec Period	S_{D1}	0.582

*The 2016 CBC requires that Site Class F be assigned to any profile containing soils vulnerable to potential failure or collapse under seismic loading, such as liquefiable soils. For Site Class F, the site coefficients are to be determined in accordance with Section 11.4.7 of ASCE 7-10. However, Section 20.3.1 of ASCE 7-10 indicates that for sites with structures having a fundamental period of vibration equal to or less than 0.5 seconds, the site coefficient factors (F_a and F_v) may be determined using the standard procedures. The seismic design parameters tabulated above were calculated using the site coefficient factors for Site Class D, assuming that the fundamental period of both of the structures is less than 0.5 seconds. However, the results of the liquefaction evaluation indicate that the subject site is underlain by potentially liquefiable soils. Therefore, if the proposed structures have fundamental periods greater than 0.5 seconds, a site-specific seismic hazards analysis will be required and additional subsurface exploration will be necessary.

Ground Motion Parameters

For the liquefaction evaluation, we utilized a site acceleration consistent with maximum considered earthquake ground motions, as required by the 2016 CBC. The peak ground acceleration (PGA) was determined in accordance with Section 11.8.3 of ASCE 7-10. The parameter PGA_M is the maximum considered earthquake geometric mean (MCE_G) PGA, multiplied by the appropriate site coefficient from Table 11.8-1 of ASCE 7-10. The web-based software application U.S. Seismic Design Maps (described in the previous section) was used to determine PGA_M, which is 0.591g. A portion of the program output is included as Plate 2 of this report. An associated earthquake magnitude was obtained from the 2008 USGS Interactive Deaggregation application available on the USGS website. The deaggregated modal magnitude is 7.03, based on the peak ground acceleration and NEHRP soil classification D.

Liquefaction

Research of the Long Beach Quadrangle, California 7.5 Minute Seismic Hazard Zone Map, published by the California Geological Survey, indicates that the site is located in a designated liquefaction hazard zone. Therefore, the scope of this investigation included a detailed liquefaction evaluation in order to determine the site-specific liquefaction potential.

Liquefaction is the loss of strength in generally cohesionless, saturated soils when the pore-water pressure induced in the soil by a seismic event becomes equal to or exceeds the overburden pressure. The primary factors which influence the potential for liquefaction include groundwater table elevation, soil type and plasticity characteristics, relative density of the soil, initial confining pressure, and intensity and duration of ground shaking. The depth within which the occurrence of liquefaction may impact surface improvements is generally identified as the upper 50 feet below the existing ground surface. Liquefaction potential is greater in saturated, loose, poorly graded fine sands with a mean (d_{50}) grain size in the range of 0.075 to 0.2 mm (Seed and Idriss, 1971). Non-sensitive clayey (cohesive) soils which possess a plasticity index of at least 18 (Bray and Sancio, 2006) are generally not considered to be susceptible to liquefaction, nor are those soils which are above the historic static groundwater table.

The liquefaction analysis was conducted in accordance with the requirements of Special Publication 117A (CDMG, 2008), and currently accepted practice (SCEC, 1997). The liquefaction potential of the subject site was evaluated using the empirical method developed by Boulanger and Idriss (Boulanger and Idriss, 2008). This method predicts the earthquake-induced liquefaction potential of the site based on a given design earthquake magnitude and peak ground acceleration at the subject site. This procedure essentially compares the cyclic resistance ratio (CRR) [the cyclic stress ratio required to induce liquefaction for a cohesionless soil stratum at a given depth] with the earthquake-induced cyclic stress ratio (CSR) at that depth from a specified design earthquake (defined by a peak ground surface acceleration and an associated earthquake moment magnitude). CRR is determined as a function of the corrected SPT N-value $(N_1)_{60\text{-}cs}$, adjusted for fines content. The factor of safety against liquefaction is defined as CRR/CSR. Based on Special Publication 117A, a factor of safety of at least 1.3 is required in order to demonstrate that a given soil stratum is non-liquefiable. Additionally, in accordance with Special Publication 117A, clayey soils which do not meet the criteria for liquefiable soils defined by Bray and Sancio (2006), loose soils with a plasticity index (PI) less than 12 and moisture content greater than 85% of the liquid limit, are considered to be insusceptible to liquefaction. Non-sensitive soils with a PI greater than 18 are also considered non-liquefiable.

As part of the liquefaction evaluation, Boring Nos. B-1 through B-4, inclusive, were extended to depths of 50± feet. The liquefaction analysis procedure is tabulated on the spreadsheet forms included in Appendix F of this report. The liquefaction potential of the site was analyzed utilizing a PGA_M of 0.597g for a magnitude 7.03 seismic event. Continuous soil data from the nearby CPTs data was used to determine the thickness of the various soil strata encountered at the boring locations.

If liquefiable soils are identified, the potential settlements that could occur as a result of liquefaction are determined using the equation for volumetric strain due to post-cyclic reconsolidation (Yoshimine et. al, 2006). This procedure uses an empirical relationship between

the induced cyclic shear strain and the corrected N-value to determine the expected volumetric strain of saturated sands subjected to earthquake shaking. This analysis is also documented on the spreadsheets included in Appendix F.

Conclusions and Recommendations

The results of the liquefaction analysis have identified potentially liquefiable soils at the site. Several potentially liquefiable strata are located at various depths between 8 and 32± feet at the boring locations. Soils which are located above the historic groundwater table, or possess factors of safety of at least 1.3 are considered non-liquefiable. Several silty clay and clayey silt strata are also considered to be non-liquefiable due to their cohesive characteristics and the results of the Atterberg limits testing with respect to the criteria of Bray and Sancio (2006). Settlement analyses were conducted for each of the potentially liquefiable strata.

Based on the settlement analysis (also tabulated on the spreadsheets in Appendix F) total dynamic (liquefaction induced) settlements of 3.13, 0.97, 1.12, and 2.43± inches are expected at Boring Nos. B-1, B-2, B-3, and B-4, respectively, during the design level earthquake. Based on these total settlements, differential settlements of up to 2± inches should be expected to occur during a liquefaction-inducing seismic event. The estimated differential settlement could be assumed to occur across a distance of 100 feet, indicating a maximum angular distortion of less than 0.002 inches per inch.

Based on the presence of compressible soils present within the upper 10 to 15± feet at the boring locations, the new structures are recommended to be supported on a deep foundation system consisting of either driven piles or drilled pier foundations. A deep foundation system can be designed to resist the effects of the anticipated differential settlements, to the extent that the structures would not catastrophically fail. Designing the proposed building to remain completely undamaged during a major seismic event is not considered to be economically feasible. The deep foundations will be extended into the medium dense to very dense non-liquefiable soils located at depths greater than 32± feet. Therefore, the liquefaction induced dynamic settlements described are not expected to have any significant impact on the building foundations. The presence of liquefiable soils are expected to impose down-drag forces on the drilled pier and/or pile foundations during the event of liquefaction. The potential down drag forces were included in the computation of the deep foundation design parameters provided in subsequent sections of this report.

Any utility connections to the structures should be designed to withstand the estimated dynamic settlements. It should also be noted that minor to moderate repairs, including releveling, restoration of utility connections, repair of damaged drywall and stucco, etc., would likely be required after occurrence of a major earthquake.

The use of deep foundation systems, as described in this report, is typical for buildings of these types, where they are underlain by the extent of liquefiable soils encountered at this site. The post-liquefaction damage that could occur within the buildings at this site will also be typical of similar buildings in the vicinity of this project. Other geotechnical and structural options are available, including the use of ground improvement. Based on discussions with the client, we understand that consideration is being given to the use of a ground improvement technique

consisting of vibro-replacement stone columns. The proposed ground improvement will be designed by a specialty contractor. We recommend that we be provided with copies of the preliminary grading and foundation plans, when they become available, for review with regard to the conclusions, recommendations, and assumptions contained within this report.

6.2 Geotechnical Design Considerations

General

Artificial fill soils were encountered at all of the boring locations extending to depths of 4½ to 6½± feet below the existing site grades. The fill soils possess variable densities and occasional organic content and are considered to be unsuitable for the support of the proposed structures. The underlying alluvium within the upper 12 to 19½± feet below the ground surface generally possesses low strengths and trace to abundant organic content. The results of laboratory testing indicate that these soils, in their present condition, would be subject to significant consolidation settlement due to the foundation loads of the proposed structures. Additional settlement may occur due to secondary consolidation, fluctuation of the groundwater table, and decomposition of the organic materials present within the near surface soils.

Therefore, it is recommended that the new structures be supported upon a deep foundation system, which is founded with the medium dense to very dense, non-liquefiable soils present at depths between 32 and at least 51½± feet. The deep foundations should also be embedded at least 5 feet within non-liquefiable, low compressibility, suitable bearing soils. It should be noted that several alternatives were evaluated to mitigate the settlement potential due to the compressibility of the near surface alluvium, including the use of ground improvement techniques. Conventional overexcavation with recompaction of the excavated soils is not considered to be practical since the compressible soils extend to depths beneath the static groundwater table. However, a ground improvement technique may be feasible to mitigate potential static and dynamic settlement. A specialty contractor should be contacted if there is interest in using ground improvement methods. The specialty contractor can provide assistance in determining if an economical ground improvement method is appropriate for this site.

As discussed in Section 6.1 of this report, potentially liquefiable soils were identified at this site. However, the recommended deep foundation system will support the proposed structure on non-liquefiable strata. Therefore, the potential effects of differential settlement that could occur as a result of liquefaction are considered to be minimal. Alternatively, if a ground improvement technique is used instead of a deep foundation system, the specialty contractor should consider the potential liquefaction settlements in their design.

Settlement

The recommended deep foundation systems will be founded beneath the compressible soils in relatively high strength soils. The deep foundation system will be designed to limit the post-construction static settlement of the proposed structures to within tolerable limits.

Expansion

Laboratory testing performed on representative samples of the near surface soils indicates that these soils possess low to medium expansion potentials (EI = 40 & 54). Based on the presence of expansive soils, special care should be taken to properly moisture condition and maintain adequate moisture content within all subgrade soils as well as newly placed fill soils. The foundation and floor slab design recommendations contained within this report are made in consideration of the expansion index test results. It is recommended that additional expansion index testing be conducted at the completion of rough grading to verify the expansion potential of the as-graded building pad.

Soluble Sulfates

The results of the soluble sulfate testing indicate that the selected samples of the on-site soils contain levels of soluble sulfates that are classified as having a moderate potential to attack concrete, in accordance with the American Concrete Institute (ACI) Publication 318-05 Building Code Requirements for Structural Concrete and Commentary, Section 4.3. However, based on the report prepared by GPI, referenced in Section 3.3 of this report, and our experience on nearby sites, soils with severe soluble sulfate concentrations are expected to be present at the site. Therefore, it is recommended that a sulfate-resistant concrete mix design be utilized for the foundations and floor slabs at this site. In accordance with the ACI requirements, it is recommended that this concrete incorporate the following characteristics:

- Cement Type: V (Five)
- Minimum Compressive Strength (f'_c) = 4,500 lbs/in^2
- Maximum Water/Cement Ratio: 0.45

It is recommended that additional sulfate testing be performed at the completion of rough grading to verify the concentrations which are present in the actual building pad subgrade soils.

Shrinkage/Subsidence

Removal and recompaction of the near surface soils is estimated to result in an average shrinkage of 10 to 15 percent. Minor ground subsidence is expected to occur in the soils below the zone of removal, due to settlement and machinery working. It should be noted that the potential shrinkage estimate is based on dry density testing performed on small-diameter samples taken at the boring locations. If a more accurate and precise shrinkage estimate is desired, SCG can perform a shrinkage study involving several excavated test-pits where in-place densities are determined using in-situ testing methods instead of laboratory density testing on small-diameter samples. Please contact SCG for details and a cost estimate regarding a shrinkage study, if desired.

The subsidence is estimated to be 0.15± feet. This estimate may be used for grading in areas that are underlain by native alluvial soils.

These estimates are based on previous experience and the subsurface conditions encountered at the boring locations. The actual amount of subsidence is expected to be variable and will be

dependant on the type of machinery used, repetitions of use, and dynamic effects, all of which are difficult to assess precisely.

Plan Review

Grading and foundation plans were not available at the time of this report. Furthermore, we understand that client is considering using ground improvement techniques at this site. It is therefore recommended that we be provided with copies of the preliminary grading, foundation, and any ground improvement plans, when they become available, for review with regard to the conclusions, recommendations, and assumptions contained within this report.

6.3 Site Grading Recommendations

The grading recommendations presented below are based on the subsurface conditions encountered at the boring locations and our understanding of the proposed development. We recommend that all grading activities be completed in accordance with the Grading Guide Specifications included as Appendix D of this report, unless superseded by site-specific recommendations presented below.

Site Stripping and Demolition

Initial site preparation should include removal of any surficial vegetation. Based on conditions encountered at the time of the subsurface exploration, the site possesses sparse to moderate grass and weed growth, especially near the berms. The actual extent of site stripping should be determined in the field by the geotechnical engineer, based on the organic content and stability of the materials encountered.

Several above ground pipelines associated with the former tanks are present in the eastern portion of the subject site. Additionally, some areas remnants of asphaltic concrete pavements are present near the ground surface. It is not known if any underground improvements associated with the previous development remain on the subject site. Any remnants of the previous improvements, including foundations, slab, and debris resulting from demolition activities should be properly disposed of off-site. Concrete and asphalt debris may be re-used within compacted fills, provided they are pulverized and the maximum particle size is less than 2 inches. Such materials should be thoroughly blended with on-site soils prior to use as fill. Alternatively, concrete and asphalt debris may be crushed and used for mechanical stabilization of unstable overexcavation subgrades.

Treatment of Existing Soils: Building Pads

Limited remedial grading remedial grading should be performed within the proposed building areas in order to facilitate the construction of the proposed structures. Based on the conditions encountered at the boring locations, and the recommended deep foundation system, the existing soils within the proposed building areas are recommended to be overexcavated to a depth of at least 1 foot below the proposed building pad subgrade elevation and to a depth of at least 1 foot below the existing grade, whichever is greater.

The overexcavation areas should extend at least 5 feet beyond the building perimeters. If the proposed structures incorporate any exterior columns (such as for a canopy or overhang) the overexcavation should also encompass these areas.

Following completion of the overexcavation, the subgrade soils within the building areas should be evaluated by the geotechnical engineer to verify their suitability to serve as the structural fill subgrade. This evaluation should include proofrolling and probing to identify any soft, loose or otherwise unstable soils that must be removed. Some localized areas of deeper excavation may be required if additional fill materials or loose, porous, or low-density native soils are encountered at the base of the overexcavation.

After a suitable overexcavation subgrade has been achieved, the exposed soils should be scarified to a depth of at least 12 inches, moisture treated to 2 percent above optimum moisture content. The subgrade soils should then be recompacted to at least 90 percent of the ASTM D-1557 maximum dry density. The previously excavated soils may then be replaced as compacted structural fill.

Treatment of Existing Soils: Retaining Walls and Site Walls

The existing soils within the areas of any proposed retaining and site walls which will not be attached to the proposed structures or supported on deep foundations should be overexcavated to a depth of 2 feet below foundation bearing grade and replaced as compacted structural fill as discussed above for the proposed building pad. Any undocumented fill soils within any of these foundation areas should be removed in their entirety. The overexcavation subgrade soils should be evaluated by the geotechnical engineer prior to scarifying, moisture conditioning, and recompacting the upper 12 inches of exposed subgrade soils, as discussed for the building areas. The previously excavated soils may then be replaced as compacted structural fill. It should be noted that erection pads for concrete tilt-up walls are considered to be part of the foundation system and the recommended depth of overexcavation should be performed beneath the bottom of the erection pad.

The existing soils in areas of new retaining walls which will be supported on deep foundations should be over excavated in a manner similar to the building pads section above.

Treatment of Existing Soils: Parking and Drive Areas

Based on economic considerations, overexcavation of the existing soils in the new parking and drive areas is not considered warranted, with the exception of areas where lower strength, or unstable, soils are identified by the geotechnical engineer during grading. Subgrade preparation in the new parking and drive areas should initially consist of removal of all soils disturbed during stripping and demolition operations.

The geotechnical engineer should then evaluate the subgrade to identify any areas of additional unsuitable soils. Any such materials should be removed to a level of firm and unyielding soil. The exposed subgrade soils should then be scarified to a depth of 12± inches, moisture conditioned (or air dried) to at least 2 to 4 percent above the optimum moisture content, and recompacted to at least 90 percent of the ASTM D-1557 maximum dry density. Based on the presence of

variable strength surficial soils throughout the site, it is expected that some isolated areas of additional overexcavation may be required to remove zones of lower strength, unsuitable soils.

The grading recommendations presented above for the proposed parking and drive areas assume that the owner and/or developer can tolerate minor amounts of settlement within the proposed parking and drive areas. The grading recommendations presented above do not completely mitigate the extent of undocumented fill soils or collapsible native alluvium in the parking and drive areas. As such, settlement and associated pavement distress could occur. Typically, repair of such distressed areas involves significantly lower costs than completely mitigating these soils at the time of construction.

Fill Placement

- Fill soils should be placed in thin (6± inches), near-horizontal lifts, moisture conditioned (or air dried) to 2 to 4 percent above the optimum moisture content, and compacted.
- On-site soils may be used for fill provided they are cleaned of any debris to the satisfaction of the geotechnical engineer. However, the some of the near surface soils possess moisture contents well over the optimum moisture content. Therefore, some drying of the on-site soils will be necessary prior to compaction as structural fill.
- All grading and fill placement activities should be completed in accordance with the requirements of the 2016 CBC and the grading code of the city of Long Beach.
- All fill soils should be compacted to at least 90 percent of the ASTM D-1557 maximum dry density. Fill soils should be well mixed.
- Compaction tests should be performed periodically by the geotechnical engineer as random verification of compaction and moisture content. These tests are intended to aid the contractor. Since the tests are taken at discrete locations and depths, they may not be indicative of the entire fill and therefore should not relieve the contractor of his responsibility to meet the job specifications.

Imported Structural Fill

All imported structural fill should consist of low expansive (EI < 50), well graded soils possessing at least 10 percent fines (that portion of the sample passing the No. 200 sieve). Additional specifications for structural fill are presented in the Grading Guide Specifications, included as Appendix D.

Utility Trench Backfill

In general, all utility trench backfill soils should be compacted to at least 90 percent of the ASTM D-1557 maximum dry density. As an alternative, a clean sand (minimum Sand Equivalent of 30) may be placed within trenches and compacted in place (jetting or flooding is not recommended). It is recommended that materials in excess of 3 inches in size not be used for utility trench backfill. Compacted trench backfill should conform to the requirements of the local grading code, and more restrictive requirements may be indicated by city of Long Beach. All utility trench backfills should be witnessed by the geotechnical engineer. The trench backfill soils should be compaction tested where possible; probed and visually evaluated elsewhere.

Utility trenches which parallel a footing, and extending below a 1h:1v plane projected from the outside edge of the footing should be backfilled with structural fill soils, compacted to at least 90 percent of the ASTM D-1557 standard. Pea gravel backfill should not be used for these trenches.

6.4 Construction Considerations

Expansive Soils

The near surface on-site soils have been determined to possess low to medium expansion potentials. Therefore, care should be given to proper moisture conditioning of all building pad subgrade soils to a moisture content of 2 to 4 percent above the Modified Proctor optimum during site grading. All imported fill soils should have low expansive (EI < 50) characteristics. **In addition to adequately moisture conditioning the subgrade soils and fill soils during grading, special care must be taken to maintain moisture content of these soils at 2 to 4 percent above the Modified Proctor optimum. This may require the contractor to frequently moisture condition these soils throughout the grading process, depending upon the weather conditions at the time of grading**.

Due to the presence of expansive soils at this site, provisions should be made to limit the potential for surface water to penetrate the soils immediately adjacent to the structure. These provisions should include directing surface runoff into rain gutters and area drains, reducing the extent of landscaped areas around the structure, and sloping the ground surface away from the buildings. Where possible, it is recommended that landscaped planters not be located immediately adjacent to the building. If landscaped planters around the building are necessary, it is recommended that drought tolerant plants or a drip irrigation system be utilized, to minimize the potential for deep moisture penetration around the structure. Presented below is a list of additional soil moisture control recommendations that should be considered by the owner, developer, and civil engineer:

- Ponding and areas of low flow gradients in unpaved walkways, grass and planter areas should be avoided. In general, minimum drainage gradients of 2 percent should be maintained in unpaved areas.
- Bare soil within five feet of proposed structures should be sloped at a minimum 5 percent gradient away from the structure (about three inches of fall in five feet), or the same area could be paved with a minimum surface gradient of one percent. Pavement is preferable.
- Decorative gravel ground cover tends to provide a reservoir for surface water and may hide areas of ponding or poor drainage. Decorative gravel is, therefore, not recommended and should not be utilized for landscaping unless equipped with a subsurface drainage system designed by a licensed landscape architect.
- Positive drainage devices, such as graded swales, paved ditches, and catch basins should be installed at appropriate locations within the area of the proposed development.
- Concrete walks and flatwork should not obstruct the free flow of surface water to the appropriate drainage devices.
- Area drains should be recessed below grade to allow free flow of water into the drain. Concrete or brick flatwork joints should be sealed with mortar or flexible mastic.
- Gutter and downspout systems should be installed to capture all discharge from roof areas. Downspouts should discharge directly into a pipe or paved surface system to be conveyed offsite.
- Enclosed planters adjoining, or in close proximity to proposed structures, should be sealed at the bottom and provided with subsurface collection systems and outlet pipes.

- Depressed planters should be raised with soil to promote runoff (minimum drainage gradient two percent or five percent, see above), and/or equipped with area drains to eliminate ponding.
- Drainage outfall locations should be selected to avoid erosion of slopes and/or properly armored to prevent erosion of graded surfaces. No drainage should be directed over or towards adjoining slopes.
- All drainage devices should be maintained on a regular basis, including frequent observations during the rainy season to keep the drains free of leaves, soil and other debris.
- Landscape irrigation should conform to the recommendations of the landscape architect and should be performed judiciously to preclude either soaking or excessive drying of the foundation soils. This should entail regular watering during the drier portions of the year and little or no irrigation during the rainy season. Automatic sprinkler systems should, therefore, be switched to manual operation during the rainy season. Good irrigation practice typically requires frequent application of limited quantities of water that are sufficient to sustain plant growth, but do not excessively wet the soils. Ponding and/or run-off of irrigation water are indications of excessive watering.

Other provisions, as determined by the landscape architect or civil engineer, may also be appropriate.

Moisture Sensitive Subgrade Soils

The near surface fill soils generally consist of silty sands and fine sandy silts and clayey silts. Based on their silt and clay content some of these soils will become unstable if exposed to significant moisture infiltration or disturbance by construction traffic. If grading occurs during a period of relatively wet weather, an increase in subgrade instability should also be expected. The site should, therefore, be graded to prevent ponding of surface water and to prevent water from running into excavations. **It should be noted that the silts and clays present beneath the fill soils (depths greater than 4½± feet) possess relatively high moisture contents and trace to abundant organic content. Subgrade stabilization is expected to be necessary where excavations extend into these soils.**

If the construction schedule dictates that site grading will occur during a period of wet weather, allowances should be made for costs and delays associated with drying the on-site soils or import of a drier, less moisture sensitive fill material. Grading during wet or cool weather may also increase the depth of overexcavation in the pad areas as well as the need for subgrade stabilization.

Excavation Considerations

The near surface soils generally consist of silty sands, fine sandy silts, and clayey silts. Some of these materials are likely to be subject to caving within shallow excavations. Where caving occurs within shallow excavations, flattened excavation slopes may be sufficient to provide excavation stability. On a preliminary basis, the inclination of temporary slopes should not exceed 2h:1v. Deeper excavations may require some form of external stabilization such as shoring or bracing. Maintaining adequate moisture content within the near-surface soils will improve excavation stability. All excavation activities on this site should be conducted in accordance with Cal-OSHA regulations.

Groundwater

The static groundwater table at this site is considered to be present at depths of 8 to 12± feet. In general, groundwater is not expected to impact the grading activities. However, if any excavations extend to depths of 7 or more feet below the existing site grades, some dewatering may be required. The dewatering contractor should be provided with a copy of this report in order to properly design the dewatering system. Additional subsurface exploration and groundwater readings may be required in order to collect more recent groundwater information.

If drilled pier foundations are selected for this site, then it will be necessary to utilize drilling fluid in order to prevent the drilled shafts from caving during construction.

6.5 Foundation Design and Construction Alternative 1 - Driven Pile Foundations

Based on the presence of compressible soils, potentially liquefiable soils, and a shallow groundwater table, it is recommended that a deep foundation system be used to support the proposed structures. Driven concrete pile foundations may be driven through the near surface compressible and liquefiable soils and embedded into the dense to very dense, relatively incompressible, non-liquefiable sands present at depths greater than 32± feet. Foundation design parameters for driven concrete piles are provided herein. In addition, the project structural engineer has also requested that we provide foundation design recommendations for drilled pier foundations. Foundation design recommendations for drilled piers are presented in Section 6.6.

Based on variable soil conditions throughout the subject site, the foundation design parameters vary based upon the site location. Zone A is defined as the south half of the southern building. Foundation design parameters for Zone A are based upon data obtained from Boring No. B-1 and CPT-2. Zone B is defined as the north half of the southern building. Foundation design parameters for Zone B are based upon data obtained from Boring No. B-2 and CPT-3. Zone C is defined as the northern building. Foundation design parameters for Zone C are based upon data obtained from Boring Nos. B-3 and 4, CPT-1, and CPT-4.

Bearing Horizon

It is recommended that the piles extend to a depth sufficient to bear within the dense sands and silty sands that were encountered at all of the boring locations. Based on the data obtained from the Borings and CPTs, the piles should be driven at least to the depths specified below in order to provide at least 5-feet embedment into dense sands.

- 14-inch Square Reinforced Concrete Driven Piles
    - Zone 1: 40 feet
    - Zone 2: 47 feet
    - Zone 3: 45 feet

Compression Capacity

The driven piles capacities were obtained using ALLPILE, a computer program developed by Civil Tech Software of Belleview, Washington. The recommended pile capacities include the loads that

may occur due to downdrag in the event of liquefaction and additional downdrag due to the presence of highly organic, low-strength soils.

Based on the relatively high loads that will be exerted by the proposed structure, it is expected that 14 inch square concrete piles will be the most economical type of piles. The table below presents the recommended allowable compression capacities for piles embedded to the depths indicated above for each zone. Capacities for other depths can be obtained from the graphical ALLPILE output forms included in this report. However, due to the presence of dense to very dense sands present at these depths, it may not be possible to achieve greater depths than those indicated below with driven reinforced concrete piles.

Zone	**Pile Length**	**14-inch Pile Capacity (kips)**
A	40	29
B	47	165
C	45	109

The allowable compression capacities presented above may be increased by one-third when considering short duration wind or seismic loads. The allowable capacities presented above include a factor of safety of 3.0 for end bearing and 2.0 for skin friction. These capacities are designed to limit the pile settlement to less than 0.5 inches, under static conditions. The capacities presented above are net capacities, and as such the weight of the concrete pile may be neglected.

Uplift Capacity

The table below presents our recommended uplift capacities for piles embedded to the specified depths. These values incorporate a factor of safety and include the dead weight of the pile. As such, they represent ground line uplift capacities. Uplift capacities for pile of other lengths can be obtained from the graphical ALLPILE output included with this report.

Zone	**Pile Length**	**14-inch Pile Capacity (kips)**
A	40	53
B	47	102
C	45	72

The allowable uplift capacities presented above include a factor-of-safety of at least 2 with regard to skin friction and a factor-of-safety of 1 with regard to the weight of the pile. Therefore, they may not be increased by one-third when considering short duration wind or seismic loads.

Lateral Capacity

Detailed lateral loading information was not available at the time of this report. Lateral loads imposed on the structure due to wind or seismic forces can be resisted by the grade beams and slabs and/or the pile. The following friction and passive pressures may be used to resist lateral forces:

- Passive Earth Pressure: 150 lbs/ft^3
- Friction Coefficient: 0.25

The lateral capacities of the piles may also be required to resist lateral forces. The lateral capacities of the piles will be determined after lateral loading information and allowable deflections are determined.

Settlement

Post-construction total settlements of a deep foundation system designed and constructed in accordance with the above recommendations are expected to be less than 0.5 inches. The differential settlement between adjacent piles is estimated to be less than 0.25 inches. Where driven piles are designed for less than the full allowable capacity, a corresponding reduction in total settlement should be expected. Where grade beams are used to connect the piles, the differential settlements between structurally connected piles will be substantially less.

Pile Design Considerations

On-center pile spacing should be at least 4 times the pile width at the bearing surface to eliminate overlapping distress influence. At a minimum, pile spacing equivalent to 3 times the pile width could be utilized with an associated 20 percent reduction in allowable capacities. In order to achieve the full lateral capacity, the on-center pile spacing should be no closer than 7 times the pile width. Piles constructed in non-linear configurations (rectangular or triangular layouts) or constructed parallel to the expected lateral forces will also be subject to a reduction in the total lateral capacity. The geotechnical engineer should be contacted to determine the lateral capacities if any of these conditions apply.

The estimated capacities presented above do not include any negative skin friction that could be caused by the placement of new fill soils. If more than 2 feet of new fill soils will be placed in large areas on the subject site, our office should be contacted to analyze these conditions and determine the appropriate pile capacities.

Pile Load Testing/Indicator Piles

The estimated pile capacities and penetration depths were based on static analysis using soil parameters determined during the field exploration and laboratory testing programs. The actual pile capacities and/or penetration depths are expected to vary. The potential for variation can be reduced, but never fully eliminated, by a well conceived and implemented pile testing program. The pile testing program could consist of driving several indicator piles and/or conducting a pile load test. The indicator piles will provide improved estimates of the pile capacities and the depths to adequate bearing strata. If desired, 1 or 2 piles could be load tested to provide even more

refined, and likely higher allowable pile capacities. However, pile load tests are somewhat expensive, and depending upon the number of piles in the foundation system, may not be economically feasible.

The indicator piles should be driven within the proposed development area, to provide more definitive information regarding the anticipated driving resistance and vibrations from pile driving and to develop pile driving criteria. Any test piles should be the same type to be used for construction and should be driven with the same equipment and techniques that will be used to drive the project piles.

Pile Driving/Construction

It is recommended that vibrations caused by pile driving operations be monitored by the pile driving contractor in order to minimize the potential for damage to nearby structures or utilities. Based on the relatively low strength soils which comprise the upper 25 to 30 feet of the subsurface profile, extensive vibrations are not expected to occur. However, monitoring should be conducted, especially during the pile load testing/indicator pile program to determine the possible effects of driving on nearby structures. Monitoring equipment capable of determining structure motions in all three dimensions should be installed on the adjacent buildings. It is also recommended that a pre-condition and post-condition survey of the existing nearby structures be performed with all parties present to document any existing distress to the structures prior to pile driving operations.

The piles should be driven through any intermediate dense soil layers provided that they can be driven without damage to the pile. Pre-drilling may be necessary to reduce the potential for damage to the concrete piles. If pre-drilling is required, an auger at least 4-inches smaller in diameter than the pile should be utilized. The equipment used for pre-drilling as well as the depths of pre-drilling should be determined in the field by the geotechnical engineer, during the initial pile testing program. The size of the pile driving hammer should be selected by the pile driving contractor, based on the type of pile and size being driven. It is recommended that once the pile driving equipment has been determined by the contractor, this information be provided to the geotechnical engineer for review.

The criteria used to determine the depths of pile driving should be based on a dynamic equation analysis. The pile should not be driven using only a depth criteria since a pre-determined depth may or may not result in the required capacity, due to natural variations in the subsurface profile in both lateral and vertical directions.

6.6 Foundation Design and Construction Alternative 2 – Drilled Pier Foundations

As discussed in the previous section of this report, it is recommended that a deep foundation system be used to support the proposed structures due to the presence of compressible soils, potentially liquefiable soils, and a shallow groundwater table. At the request of the project structural engineer, we have provided recommendations for a deep foundation system consisting of drilled concrete piers.

As previously discussed, the foundation design parameters vary based upon the site location, based on variable soil conditions. Zone A is defined as the south half of the southern building.

Foundation design parameters for Zone A are based upon data obtained from Boring No. B-1 and CPT-2. Zone B is defined as the north half of the southern building. Foundation design parameters for Zone B are based upon data obtained from Boring No. B-2 and CPT-3. Zone C is defined as the northern building area. Foundation design parameters for Zone C are based upon data obtained from Boring Nos. B-3 and 4, CPT-1, and CPT-4.

Bearing Horizon

It is recommended that the piles extend to a depth sufficient to bear within the dense sands and silty sands that were encountered at all of the boring locations. Based on the data obtained from the Borings and CPTs, the drilled concrete pier foundations should be driven at least to the depths specified below in order to provide at least 5-feet embedment into dense sands.

- Drilled Concrete Piers
    - Zone 1: 40 feet
    - Zone 2: 47 feet
    - Zone 3: 45 feet

Compression Capacity

The tables below present the recommended allowable compression capacities for drilled pier foundations for various depths and diameters. It should be noted that we have analyzed eight different diameter and length combinations for the soils conditions present within each of the three zones. A summary of all of the compression capacities was provided to the client and project structural engineer via e-mail. Based on feedback we have received from the project structural engineer, we have provided axial capacities for three different diameter and length combinations for each of the 3 zones in the tables below. Additional capacities for other length and diameter combinations can be provided upon request.

Recommended Allowable Compression Capacities (kips) – Zone A		
Tip Depth (feet)	**Pier Diameter (inches)**	**Axial Capacity (kips)**
50	24	100
50	36	224
50	42	266

Recommended Allowable Compression Capacities (kips) – Zone B		
Tip Depth (feet)	**Pier Diameter (inches)**	**Axial Capacity (kips)**
50	30	378
47	36	474
47	42	603

Recommended Allowable Compression Capacities (kips) – Zone C		
Tip Depth (feet)	**Pier Diameter (inches)**	**Axial Capacity (kips)**
45	36	366
45	42	430
50	42	512

The allowable compression capacity presented above may be increased by one-third when considering short duration wind or seismic loads. The allowable capacities presented above include a factor of safety of 3.0 for end bearing and 2.0 for skin friction. These capacities are designed to limit the pier settlement to less than ½ inch, under static conditions. The capacities presented above are net capacities, and as such the weight of the concrete within the pier may be neglected.

Uplift Capacity

The tables below present the recommended uplift capacities for drilled pier foundations with the length and diameter combinations previously considered for axial capacity. These values incorporate a factor of safety and include the dead weight of the pile. As such, they represent ground line uplift capacities.

Recommended Uplift Capacities (kips) – Zone A		
Tip Depth (feet)	**Pier Diameter (inches)**	**Uplift Capacity (kips)**
50	24	78
50	36	132
50	42	161

Recommended Uplift Capacities (kips) – Zone B		
Tip Depth (feet)	**Pier Diameter (inches)**	**Uplift Capacity (kips)**
50	30	166
47	36	193
47	42	232

Recommended Uplift Capacities (kips) – Zone C		
Tip Depth (feet)	**Pier Diameter (inches)**	**Uplift Capacity (kips)**
45	36	137
45	42	167
50	42	189

The allowable uplift capacities presented above include a factor-of-safety of at least 2 with regard to skin friction and a factor-of-safety of 1 with regard to the weight of the pile. Therefore, they may not be increased by one-third when considering short duration wind or seismic loads.

Settlement

Post-construction total settlements of a deep foundation system designed and constructed in accordance with the above recommendations are expected to be less than 0.5 inches. The differential settlement between drilled piers is estimated to be less than 0.25 inches. Where drilled piers are designed for less than the full allowable capacity, a corresponding reduction in total settlement should be expected. Where grade beams are used to connect the piers, the differential settlements between structurally connected piers will be substantially less.

Drilled Pier Construction

Minimum pier shaft diameters should be 24 inches to help eliminate arching of concrete and possible void formation within the piers. On-center pier spacing should be at least three (3) times the pier diameter at the bearing surface to eliminate an overlapping stress influence. At a minimum, a pier spacing equivalent to 2½ times the pier diameter, center to center, could be utilized, with an associated 20 percent reduction in allowable capacities. Grade beams between the drilled piers are required to structurally connect the piers and should be designed by the structural engineer. Based on the conditions encountered at the boring locations, significant caving of the drilled pier excavations may occur. If caving or groundwater intrusion does occur during drilling, casing or liners will be required.

Due to the presence of shallow groundwater and low strength soils near surface soils, it will be necessary to utilize drilling mud in order to the drilled shaft from closing or caving during and after drilling. Concrete should be placed using a tremie pipe throughout construction of the piers. Concrete should be placed at about a 6-inch slump when long reinforcing steel is used. It is recommended that the pier construction be performed in accordance with American Concrete Institute documents (ACI 336, I-79 and ACI 336-3R-72, both revised 1985). In the event that casing is required, a sufficient head of concrete (minimum of 5 feet) should be maintained in the casing as the casing is being removed to prevent the intrusion of caving soils in the pier.

A representative of the geotechnical engineer should be present during drilling of the pier shafts. The geotechnical engineer should evaluate the suitability of the bearing soils as well as the composition of the soils removed from the drilled shaft.

6.7 Floor Slab Design and Construction

Subgrades which will support new floor slabs should be prepared in accordance with the recommendations contained in the ***Site Grading Recommendations*** section of this report. Based on the presence of highly compressible soils, we expect that the floor of the new structure will consist of a structural slab, ultimately supported by the deep foundation system. Based on the preceding grading recommendations, the structural slab will be underlain by structural fills soils extending to a depth of at least 1 foot below proposed finished pad grade. Based on geotechnical considerations, the floor slabs may be designed as follows:

- Minimum slab thickness: 5 inches.

- The floor slab reinforcement should be determined by the structural engineer, based on the imposed slab loading and the potential liquefaction settlements. However, the minimum floor slab reinforcement should consist of No. 3 rebars at 18-inches on center in both directions, due to the presence of low to medium expansive soils.

- Slab underlayment: If moisture sensitive floor coverings will be used then minimum slab underlayment should consist of a moisture vapor barrier constructed below the entire area of the proposed slab where such moisture sensitive coverings are anticipated. The moisture vapor barrier should meet or exceed the Class A rating as defined by ASTM E 1745-97 and have a permeance rating less than 0.01 perms as described in ASTM E 96-95 and ASTM E 154-88. The moisture vapor barrier should be properly constructed in accordance with all applicable manufacturer specifications. Given that a rock free subgrade is anticipated and that a capillary break is not required, sand below the barrier is not required. The need for sand and/or the amount of sand above the moisture vapor barrier should be specified by the structural engineer or concrete contractor. The selection of sand above the barrier is not a geotechnical engineering issue and hence outside our purview.

- Moisture condition the floor slab subgrade soils to 2 to 4 percent above the Modified Proctor optimum moisture content, to a depth of 12 inches. The moisture content of the floor slab subgrade soils should be verified by the geotechnical engineer within 24 hours prior to concrete placement.

- Proper concrete curing techniques should be utilized to reduce the potential for slab curling or the formation of excessive shrinkage cracks.

The actual design of the floor slab should be completed by the structural engineer to verify adequate thickness and reinforcement. The steel reinforcement recommendations presented above are based on standard geotechnical practice and the structure type proposed for the site. Additional rigidity may be necessary for structural considerations, or to resist the effects of the liquefaction-induced differential settlements discussed in Section 6.1.

6.8 Retaining Wall Design and Construction

New retaining walls are expected to be necessary in the truck court areas. Additionally, although not indicated on the site plan, the proposed development may require some small retaining walls (less than 5± feet in height) to facilitate the new site grades.

Retaining Wall Design Parameters

Based on the soil conditions encountered at the boring locations, the following parameters may be used in the design of new retaining walls for this site. We have provided parameters assuming the use of on-site soils for retaining wall backfill. The near surface soils generally consist of silty fine sands, fine sandy silts, silty clays, and clayey silts. However, the clayey silts and silty clays possess a medium expansion potential and should not be used for retaining wall backfill. Additionally, any soils possessing appreciable organic matter should not be used for retaining wall backfill. Based on their classifications, the silty sand, and fine sandy silt materials are expected to possess a friction angle of at least 28 degrees when compacted to 90 percent of the ASTM-1557 maximum dry density.

If desired, SCG could provide design parameters for an alternative select backfill material behind the retaining walls. The use of select backfill material could result in lower lateral earth pressures. In order to use the design parameters for the imported select fill, this material must be placed within the entire active failure wedge. This wedge is defined as extending from the heel of the retaining wall upwards at an angle of approximately 60° from horizontal. If select backfill material behind the retaining wall is desired, SCG should be contacted for supplementary recommendations.

RETAINING WALL DESIGN PARAMETERS

Design Parameter		**Soil Type** On-Site Soils
Internal Friction Angle (ϕ)		28°
Unit Weight		120 lbs/ft^3
Equivalent Fluid Pressure:	Active Condition (level backfill)	43 lbs/ft^3
	Active Condition (2h:1v backfill)	76 lbs/ft^3
	At-Rest Condition (level backfill)	64 lbs/ft^3

Regardless of the backfill type, the walls should be designed using a soil-footing coefficient of friction of 0.28 and an equivalent passive pressure of 250 lbs/ft^3. The structural engineer should incorporate appropriate factors of safety in the design of the retaining walls.

The active earth pressure may be used for the design of retaining walls that do not directly support structures or support soils that in turn support structures and which will be allowed to deflect. The at-rest earth pressure should be used for walls that will not be allowed to deflect

such as those which will support foundation bearing soils, or which will support foundation loads directly.

Where the soils on the toe side of the retaining wall are not covered by a "hard" surface such as a structure or pavement, the upper 1 foot of soil should be neglected when calculating passive resistance due to the potential for the material to become disturbed or degraded during the life of the structure.

Seismic Lateral Earth Pressures

In accordance with the 2016 CBC, any retaining walls more than 6 feet in height must be designed for seismic lateral earth pressures. If walls 6 feet or more are required for this site, the geotechnical engineer should be contacted for supplementary seismic lateral earth pressure recommendations.

Retaining Wall Foundation Design

It is expected that any retaining walls which are part of the proposed structure will be supported upon the recommended deep foundation system. Any retaining wall foundations for walls which will be supported on conventional shallow foundations should be should be supported within newly placed compacted structural fill, extending to a depth of at least 2 feet below the proposed bearing grade. Retaining walls supported on conventional shallow foundations may be designed for an allowable soil bearing pressure of 1,500 lbs/ft^2.

Backfill Material

On-site soils may be used to backfill the retaining walls. However, all backfill material placed within 3 feet of the back wall face should have a particle size no greater than 3 inches. The retaining wall backfill materials should be well graded.

It is recommended that a properly installed prefabricated drainage composite such as the MiraDRAIN 6000XL (or approved equivalent), which is specifically designed for use behind retaining walls be used. If the drainage composite material is not covered by an impermeable surface, such as a structure or pavement, a 12-inch thick layer of a low permeability soil should be placed over the backfill to reduce surface water migration to the underlying soils. The drainage composite should be separated from the backfill soils by a suitable geotextile, approved by the geotechnical engineer.

All retaining wall backfill should be placed and compacted under engineering controlled conditions in the necessary layer thicknesses to ensure an in-place density between 90 and 93 percent of the maximum dry density as determined by the Modified Proctor test (ASTM D1557). Care should be taken to avoid over-compaction of the soils behind the retaining walls, and the use of heavy compaction equipment should be avoided.

Subsurface Drainage

As previously indicated, the retaining wall design parameters are based upon drained backfill conditions. Consequently, some form of permanent drainage system will be necessary in conjunction with the appropriate backfill material. Subsurface drainage may consist of either:

- A weep hole drainage system typically consisting of a series of 4-inch diameter holes in the wall situated slightly above the ground surface elevation on the exposed side of the wall and at an approximate 8-foot on-center spacing. The weep holes should include a one cubic foot gravel pocket surrounded by a suitable geotextile at each weep hole location.

- A 4-inch diameter perforated pipe surrounded by 2 cubic feet of gravel per linear foot of drain placed behind the wall, above the retaining wall footing. The gravel layer should be wrapped in a suitable geotextile fabric to reduce the potential for migration of fines. The footing drain should be extended to daylight or tied into a storm drainage system.

6.9 Pavement Design Parameters

Site preparation in the pavement area should be completed as previously recommended in the ***Site Grading Recommendations*** section of this report. The subsequent pavement recommendations assume proper drainage and construction monitoring, and are based on either PCA or CALTRANS design parameters for a twenty (20) year design period. However, these designs also assume a routine pavement maintenance program to obtain the anticipated 20-year pavement service life.

Pavement Subgrades

It is anticipated that the new pavements will be supported on the existing fill and/or native soils that have been scarified, moisture conditioned, and recompacted. These materials generally consist of silty fine sands, fine sandy silts, silty clays and clayey silts. These materials are expected to exhibit poor pavement support characteristics, with estimated R-values of 10 to 20. Since R-value testing was not included in the scope of services for the current project, the subsequent pavement designs are based upon a conservatively assumed R-value of 10. Any fill material imported to the site should have support characteristics equal to or greater than that of the on-site soils and be placed and compacted under engineering-controlled conditions. It may be desirable to perform R-value testing after the completion of rough grading to verify the R-value of the as-graded parking subgrade.

Asphaltic Concrete

Presented below are the recommended thicknesses for new flexible pavement structures consisting of asphaltic concrete over a granular base. The pavement designs are based on the traffic indices (TI's) indicated. The client and/or civil engineer should verify that these TI's are representative of the anticipated traffic volumes. If the client and/or civil engineer determine that the expected traffic volume will exceed the applicable traffic index, we should be contacted for

supplementary recommendations. The design traffic indices equate to the following approximate daily traffic volumes over a 20 year design life, assuming six operational traffic days per week.

Traffic Index	No. of Heavy Trucks per Day
4.0	0
5.0	1
6.0	3
7.0	11
8.0	35

For the purpose of the traffic volumes indicated above, a truck is defined as a 5-axle tractor trailer unit with one 8-kip axle and two 32-kip tandem axles. All of the traffic indices allow for 1,000 automobiles per day.

ASPHALT PAVEMENTS (R = 10)					
Materials	**Thickness (inches)**				
	Automobile Parking (TI = 4.0)	Automobile Drive Lanes (TI = 5.0)	Truck Traffic		
			(TI = 6.0)	(TI = 7.0)	(TI = 8.0)
Asphalt Concrete	3	3	3½	4	5
Aggregate Base	6	9	12	15	16
Compacted Subgrade	12	12	12	12	12

The aggregate base course should be compacted to at least 95 percent of the ASTM D-1557 maximum dry density. The asphaltic concrete should be compacted to at least 95 percent of the Marshall maximum density, as determined by ASTM D-2726. The aggregate base course may consist of crushed aggregate base (CAB) or crushed miscellaneous base (CMB), which is a recycled gravel, asphalt and concrete material. The gradation, R-Value, Sand Equivalent, and Percentage Wear of the CAB or CMB should comply with appropriate specifications contained in the current edition of the "Greenbook" Standard Specifications for Public Works Construction.

Portland Cement Concrete

The preparation of the subgrade soils within concrete pavement areas should be performed as previously described for proposed asphalt pavement areas. The minimum recommended thicknesses for the Portland Cement Concrete pavement sections are as follows:

PORTLAND CEMENT CONCRETE PAVEMENTS			
Materials	**Thickness (inches)**		
	Automobile and Light Truck Traffic (TI = 5.0 & 6.0)	Truck Traffic	
		(TI = 7.0)	(TI = 8.0)
PCC	5½	7	8
Compacted Subgrade (95% minimum compaction)	12	12	12

The concrete should have a 28-day compressive strength of at least 3,000 psi. The maximum joint spacing within all of the PCC pavements is recommended to be equal to or less than 30 times the pavement thickness.

7.0 GENERAL COMMENTS

This report has been prepared as an instrument of service for use by the client, in order to aid in the evaluation of this property and to assist the architects and engineers in the design and preparation of the project plans and specifications. This report may be provided to the contractor(s) and other design consultants to disclose information relative to the project. However, this report is not intended to be utilized as a specification in and of itself, without appropriate interpretation by the project architect, civil engineer, and/or structural engineer. The reproduction and distribution of this report must be authorized by the client and Southern California Geotechnical, Inc. Furthermore, any reliance on this report by an unauthorized third party is at such party's sole risk, and we accept no responsibility for damage or loss which may occur. The client(s)' reliance upon this report is subject to the Engineering Services Agreement, incorporated into our proposal for this project.

The analysis of this site was based on a subsurface profile interpolated from limited discrete soil samples. While the materials encountered in the project area are considered to be representative of the total area, some variations should be expected between boring locations and sample depths. If the conditions encountered during construction vary significantly from those detailed herein, we should be contacted immediately to determine if the conditions alter the recommendations contained herein.

This report has been based on assumed or provided characteristics of the proposed development. It is recommended that the owner, client, architect, structural engineer, and civil engineer carefully review these assumptions to ensure that they are consistent with the characteristics of the proposed development. If discrepancies exist, they should be brought to our attention to verify that they do not affect the conclusions and recommendations contained herein. We also recommend that the project plans and specifications be submitted to our office for review to verify that our recommendations have been correctly interpreted.

The analysis, conclusions, and recommendations contained within this report have been promulgated in accordance with generally accepted professional geotechnical engineering practice. No other warranty is implied or expressed.

8.0 REFERENCES

California Division of Mines and Geology (CDMG), "Guidelines for Evaluating and Mitigating Seismic Hazards in California," State of California, Department of Conservation, Division of Mines and Geology, Special Publication 117A, 2008.

Idriss, I. M. and Boulanger, R.W., "Soil Liquefaction During Earthquakes", Earthquake Engineering Research Institute, 2008.

National Research Council (NRC), "Liquefaction of Soils During Earthquakes," Committee on Earthquake Engineering, National Research Council, Washington D. C., Report No. CETS-EE-001, 1985.

Seed, H. B., and Idriss, I. M., "Simplified Procedure for Evaluating Soil Liquefaction Potential using field Performance Data," Journal of the Soil Mechanics and Foundations Division, American Society of Civil Engineers, September 1971, pp. 1249-1273.

Sadigh, K., Chang, C. –Y., Egan, J. A., Makdisi. F., Youngs, R. R., "*Attenuation Relationships for Shallow Crustal Earthquakes Based on California Strong Motion Data"*, Seismological Research Letters, Seismological Society of America, Volume 68, Number 1, January/ February 1997, pp. 180-189.

Southern California Earthquake Center (SCEC), University of Southern California, "Recommended Procedures for Implementation of DMG Special Publication 117, Guidelines for Analyzing and Mitigating Liquefaction in California," Committee formed 1997.

Tokimatsu K., and Seed, H. B., "Evaluation of Settlements in Sands Due to Earthquake Shaking," Journal of the Geotechnical Engineering Division, American society of Civil Engineers, Volume 113, No. 8, August 1987, pp. 861-878.

Tokimatsu, K. and Yoshimi, Y., "*Empirical Correlations of Soil Liquefaction Based on SPT N-value and Fines Content,"* Seismological Research Letters, Eastern Section Seismological Society Of America, Volume 63, Number 1, p. 73.

Youd, T. L. and Idriss, I. M. (Editors), "Proceedings of the NCEER Workshop on Evaluation of Liquefaction Resistance of Soils," Salt Lake City, UT, January 5-6 1996, NCEER Technical Report NCEER-97-0022, Buffalo, NY.

APPENDIX A

SOURCE: LOS ANGELES COUNTY
THOMAS GUIDE, 2013

SITE LOCATION MAP
TWO PROPOSED COMMERCIAL/INDUSTRIAL BUILDINGS
LONG BEACH, CALIFORNIA
SCALE: 1" = 2400'
DRAWN: JLL CHKD: JAS
SCG PROJECT 16G136-1
PLATE 1

SOUTHERN CALIFORNIA GEOTECHNICAL

STUDEBAKER ROAD

BUILDING 1

BUILDING 2

PARCEL 1

PARCEL 2

B-1

CPT-2

B-2

CPT-3

B-3

CPT-1

B-4

CPT-4

B-5

B-6

N.A.P.

N.A.P.

N.A.P.

N.A.P.

PIPE

GATE

GEOTECHNICAL LEGEND

APPROXIMATE BORING LOCATION

APPROXIMATE CPT LOCATION

NORTH

SoCalGeo

NOTE: BASE MAP PREPARED BY KEY GAA ARCHITECTS, INC.

NOTE: TOPOGRAPHIC MAP PREPARED BY PROACTIVE ENGINEERING CONSULTANTS.

BORING AND CPT LOCATION PLAN

TWO PROPOSED COMMERCIAL/INDUSTRIAL BUILDINGS

LONG BEACH, CALIFORNIA

SCALE: 1" = 60'

DRAWN: JLL
CHKD: DWN

SCG PROJECT
16G136-1

PLATE 2

SOUTHERN CALIFORNIA GEOTECHNICAL

APPENDIX B

BORING LOG LEGEND

SAMPLE TYPE	GRAPHICAL SYMBOL	SAMPLE DESCRIPTION
AUGER		SAMPLE COLLECTED FROM AUGER CUTTINGS, NO FIELD MEASUREMENT OF SOIL STRENGTH. (DISTURBED)
CORE		ROCK CORE SAMPLE: TYPICALLY TAKEN WITH A DIAMOND-TIPPED CORE BARREL. TYPICALLY USED ONLY IN HIGHLY CONSOLIDATED BEDROCK.
GRAB		SOIL SAMPLE TAKEN WITH NO SPECIALIZED EQUIPMENT, SUCH AS FROM A STOCKPILE OR THE GROUND SURFACE. (DISTURBED)
CS		CALIFORNIA SAMPLER: 2-1/2 INCH I.D. SPLIT BARREL SAMPLER, LINED WITH 1-INCH HIGH BRASS RINGS. DRIVEN WITH SPT HAMMER. (RELATIVELY UNDISTURBED)
NSR		NO RECOVERY: THE SAMPLING ATTEMPT DID NOT RESULT IN RECOVERY OF ANY SIGNIFICANT SOIL OR ROCK MATERIAL.
SPT		STANDARD PENETRATION TEST: SAMPLER IS A 1.4 INCH INSIDE DIAMETER SPLIT BARREL, DRIVEN 18 INCHES WITH THE SPT HAMMER. (DISTURBED)
SH		SHELBY TUBE: TAKEN WITH A THIN WALL SAMPLE TUBE, PUSHED INTO THE SOIL AND THEN EXTRACTED. (UNDISTURBED)
VANE		VANE SHEAR TEST: SOIL STRENGTH OBTAINED USING A 4 BLADED SHEAR DEVICE. TYPICALLY USED IN SOFT CLAYS-NO SAMPLE RECOVERED.

COLUMN DESCRIPTIONS

DEPTH: Distance in feet below the ground surface.

SAMPLE: Sample Type as depicted above.

BLOW COUNT: Number of blows required to advance the sampler 12 inches using a 140 lb hammer with a 30-inch drop. 50/3" indicates penetration refusal (>50 blows) at 3 inches. WH indicates that the weight of the hammer was sufficient to push the sampler 6 inches or more.

POCKET PEN.: Approximate shear strength of a cohesive soil sample as measured by pocket penetrometer.

GRAPHIC LOG: Graphic Soil Symbol as depicted on the following page.

DRY DENSITY: Dry density of an undisturbed or relatively undisturbed sample in lbs/ft^3.

MOISTURE CONTENT: Moisture content of a soil sample, expressed as a percentage of the dry weight.

LIQUID LIMIT: The moisture content above which a soil behaves as a liquid.

PLASTIC LIMIT: The moisture content above which a soil behaves as a plastic.

PASSING #200 SIEVE: The percentage of the sample finer than the #200 standard sieve.

UNCONFINED SHEAR: The shear strength of a cohesive soil sample, as measured in the unconfined state.

SOIL CLASSIFICATION CHART

MAJOR DIVISIONS			SYMBOLS GRAPH	SYMBOLS LETTER	TYPICAL DESCRIPTIONS
COARSE GRAINED SOILS MORE THAN 50% OF MATERIAL IS LARGER THAN NO. 200 SIEVE SIZE	GRAVEL AND GRAVELLY SOILS MORE THAN 50% OF COARSE FRACTION RETAINED ON NO. 4 SIEVE	CLEAN GRAVELS (LITTLE OR NO FINES)		GW	WELL-GRADED GRAVELS, GRAVEL - SAND MIXTURES, LITTLE OR NO FINES
				GP	POORLY-GRADED GRAVELS, GRAVEL - SAND MIXTURES, LITTLE OR NO FINES
		GRAVELS WITH FINES (APPRECIABLE AMOUNT OF FINES)		GM	SILTY GRAVELS, GRAVEL - SAND - SILT MIXTURES
				GC	CLAYEY GRAVELS, GRAVEL - SAND - CLAY MIXTURES
	SAND AND SANDY SOILS MORE THAN 50% OF COARSE FRACTION PASSING ON NO. 4 SIEVE	CLEAN SANDS (LITTLE OR NO FINES)		SW	WELL-GRADED SANDS, GRAVELLY SANDS, LITTLE OR NO FINES
				SP	POORLY-GRADED SANDS, GRAVELLY SAND, LITTLE OR NO FINES
		SANDS WITH FINES (APPRECIABLE AMOUNT OF FINES)		SM	SILTY SANDS, SAND - SILT MIXTURES
				SC	CLAYEY SANDS, SAND - CLAY MIXTURES
FINE GRAINED SOILS MORE THAN 50% OF MATERIAL IS SMALLER THAN NO. 200 SIEVE SIZE	SILTS AND CLAYS	LIQUID LIMIT LESS THAN 50		ML	INORGANIC SILTS AND VERY FINE SANDS, ROCK FLOUR, SILTY OR CLAYEY FINE SANDS OR CLAYEY SILTS WITH SLIGHT PLASTICITY
				CL	INORGANIC CLAYS OF LOW TO MEDIUM PLASTICITY, GRAVELLY CLAYS, SANDY CLAYS, SILTY CLAYS, LEAN CLAYS
				OL	ORGANIC SILTS AND ORGANIC SILTY CLAYS OF LOW PLASTICITY
	SILTS AND CLAYS	LIQUID LIMIT GREATER THAN 50		MH	INORGANIC SILTS, MICACEOUS OR DIATOMACEOUS FINE SAND OR SILTY SOILS
				CH	INORGANIC CLAYS OF HIGH PLASTICITY
				OH	ORGANIC CLAYS OF MEDIUM TO HIGH PLASTICITY, ORGANIC SILTS
HIGHLY ORGANIC SOILS				PT	PEAT, HUMUS, SWAMP SOILS WITH HIGH ORGANIC CONTENTS

NOTE: DUAL SYMBOLS ARE USED TO INDICATE BORDERLINE SOIL CLASSIFICATIONS

SOUTHERN CALIFORNIA GEOTECHNICAL
A California Corporation

BORING NO. B-1

JOB NO.: 16G136
PROJECT: 2 C/I Bldgs
LOCATION: Long Beach, California

DRILLING DATE: 3/30/16
DRILLING METHOD: Hollow Stem Auger
LOGGED BY: Joseph Lozano Leon

WATER DEPTH: 12 feet
CAVE DEPTH: 20 feet
READING TAKEN: At Completion

FIELD RESULTS						LABORATORY RESULTS						
DEPTH (FEET)	SAMPLE	BLOW COUNT	POCKET PEN. (TSF)	GRAPHIC LOG	DESCRIPTION SURFACE ELEVATION: --- MSL	DRY DENSITY (PCF)	MOISTURE CONTENT (%)	LIQUID LIMIT	PLASTIC LIMIT	PASSING #200 SIEVE (%)	UNCONFINED SHEAR (TSF)	COMMENTS
	X	17			FILL: Gray fine Sandy Silt, little Clay, abundant Iron oxide staining, medium dense-moist to very moist	110	15					EI = 40 @ 0 to 5'
	X	13	4.5+		FILL: Dark Gray to Black Clayey Silt, trace fine Sand, stiff-very moist	104	13					
					FILL: Gray Brown fine Sandy Silt, some Iron oxide staining, loose-moist to very moist							
5	X	16	4.5		FILL: Gray Brown Clayey Silt, little fine Sand, stiff-very moist	98	22					
	X	10	3.0		ALLUVIUM: Gray fine Clayey Silt, some Organic fibers, medium dense-very moist	87	34			83		
	X	7	2.0		Gray Clayey Silt, some Organic fibers, medium stiff-very moist	76	43			92		
10	X	2	1.5		Dark Gray Clayey Silt, some Organic content, very soft to soft-very moist to wet		39					
	X	2			@ 12 feet, Water encountered during drilling		89			66		
15	X	1	1.0		Black Silty Clay, abundant Organic content, very soft-wet		70	93	43			
	X	6	0.5		Dark Gray Silty Clay, trace Organic content, medium stiff-wet		30			73		
20	X	8			Dark Gray Silty fine Sand to fine Sandy Silt, trace Organic content, very loose to loose-wet		27			59		
	X	4					32			23		
25	X	20			Dark Gray fine Sandy Silt, some Organics, medium dense-wet		28			73		
	X	15			Dark Gray Silty fine Sand, trace medium Sand, interbedded Clay lenses, medium dense-wet		19					
30	X	11					28			33		
	X	23			Gray fine to medium Sand, trace Silt, medium dense to dense-wet		9			3		

TBL 16G136.GPJ SOCALGEO.GDT 5/10/16

SOUTHERN CALIFORNIA GEOTECHNICAL
A California Corporation

BORING NO. B-1

JOB NO.: 16G136
PROJECT: 2 C/I Bldgs
LOCATION: Long Beach, California

DRILLING DATE: 3/30/16
DRILLING METHOD: Hollow Stem Auger
LOGGED BY: Joseph Lozano Leon

WATER DEPTH: 12 feet
CAVE DEPTH: 20 feet
READING TAKEN: At Completion

FIELD RESULTS						LABORATORY RESULTS						
DEPTH (FEET)	SAMPLE	BLOW COUNT	POCKET PEN. (TSF)	GRAPHIC LOG	DESCRIPTION (Continued)	DRY DENSITY (PCF)	MOISTURE CONTENT (%)	LIQUID LIMIT	PLASTIC LIMIT	PASSING #200 SIEVE (%)	UNCONFINED SHEAR (TSF)	COMMENTS
	X	33			Gray fine to medium Sand, trace Silt, medium dense to dense-wet		20					
					Gray fine Sand, trace Silt, dense-wet							
40	X	36					18					
45	X	35					22					
50	X	30					21					
					Boring Terminated at 51½'							

TBL 16G136.GPJ SOCALGEO.GDT 5/10/16

SOUTHERN CALIFORNIA GEOTECHNICAL
A California Corporation

BORING NO. B-2

JOB NO.: 16G136
PROJECT: 2 C/I Bldgs
LOCATION: Long Beach, California

DRILLING DATE: 3/30/16
DRILLING METHOD: Hollow Stem Auger
LOGGED BY: Joseph Lozano Leon

WATER DEPTH: 13 feet
CAVE DEPTH: 12 feet
READING TAKEN: At Completion

SURFACE ELEVATION: --- MSL

FIELD RESULTS					DESCRIPTION	LABORATORY RESULTS						
DEPTH (FEET)	SAMPLE	BLOW COUNT	POCKET PEN. (TSF)	GRAPHIC LOG		DRY DENSITY (PCF)	MOISTURE CONTENT (%)	LIQUID LIMIT	PLASTIC LIMIT	PASSING #200 SIEVE (%)	UNCONFINED SHEAR (TSF)	COMMENTS
	X	9			FILL: Light Gray Brown Silty fine to medium Sand, little Clay nodules, trace Iron oxide staining, loose-damp to moist		8					
					ALLUVIUM: Dark Gray fine Sandy Silt, little Clay, some Organic content, stiff-very moist		37					
5	X	9	2.5		Gray Brown fine Sandy Clay to Silty Clay, little Iron oxide staining, trace Organic content, medium stiff to stiff-very moist		20					
	X	8	1.5				19	31	17			
10	X	9			Light Brown Clayey fine Sand, some Iron oxide staining, stiff-very moist		15			38		
	X	17			Gray Brown fine Sand, little medium Sand, trace to little Silt, trace calcareous nodules, medium dense-wet @ 13 feet, Water encountered during drilling		20			6		
15	X	20					17			6		
	X	21			Gray Brown fine to medium Sand, some coarse Sand, trace Silt, medium dense-wet		17			6		
20												
	X	21			Light Gray Brown Clayey Silt, trace fine Gravel, trace Silt, very stiff-wet		12			8		
25			2.5		Gray Clayey Silt with thinly interbedded Clay lenses, stiff to very stiff-wet		35			92		
	X	27	2.0				32			96		
30												
	X	20	2.5				33	57	33			

TBL 16G136.GPJ SOCALGEO.GDT 5/10/16

SOUTHERN CALIFORNIA GEOTECHNICAL
A California Corporation

BORING NO. B-2

JOB NO.: 16G136
PROJECT: 2 C/I Bldgs
LOCATION: Long Beach, California

DRILLING DATE: 3/30/16
DRILLING METHOD: Hollow Stem Auger
LOGGED BY: Joseph Lozano Leon

WATER DEPTH: 13 feet
CAVE DEPTH: 12 feet
READING TAKEN: At Completion

FIELD RESULTS						LABORATORY RESULTS						
DEPTH (FEET)	SAMPLE	BLOW COUNT	POCKET PEN. (TSF)	GRAPHIC LOG	DESCRIPTION (Continued)	DRY DENSITY (PCF)	MOISTURE CONTENT (%)	LIQUID LIMIT	PLASTIC LIMIT	PASSING #200 SIEVE (%)	UNCONFINED SHEAR (TSF)	COMMENTS
					Gray Clayey Silt with thinly interbedded Clay lenses, stiff to very stiff-wet							
	X	28	1.5				31			91		
40												
					Gray fine to medium Sand, trace to little Silt, trace Clay nodules, very dense-wet							
	X	67					19					
45												
	X	70					19					
50												
					Boring Terminated at 50'							

TBL 16G136.GPJ SOCALGEO.GDT 5/10/16

SOUTHERN CALIFORNIA GEOTECHNICAL
A California Corporation

BORING NO. B-3

JOB NO.: 16G136
PROJECT: 2 C/I Bldgs
LOCATION: Long Beach, California

DRILLING DATE: 3/30/16
DRILLING METHOD: Hollow Stem Auger
LOGGED BY: Joseph Lozano Leon

WATER DEPTH: 8 feet
CAVE DEPTH: 20 feet
READING TAKEN: At Completion

FIELD RESULTS						LABORATORY RESULTS						
DEPTH (FEET)	SAMPLE	BLOW COUNT	POCKET PEN. (TSF)	GRAPHIC LOG	DESCRIPTION SURFACE ELEVATION: --- MSL	DRY DENSITY (PCF)	MOISTURE CONTENT (%)	LIQUID LIMIT	PLASTIC LIMIT	PASSING #200 SIEVE (%)	UNCONFINED SHEAR (TSF)	COMMENTS
					FILL: Gray Brown Clayey Silt, little fine Sand, medium stiff-moist							
	X	7	4.5				11 15					
5	X	16	2.0		ALLUVIUM: Dark Brown Clayey fine Sand to fine Sandy Clay, abundant Iron oxide staining, loose to medium dense-moist to wet		12					
	X	10	1.5		@ 8 feet, Water encountered during drilling		16					
10	X	7			Brown Clayey fine to medium Sand, loose-wet		17			27		
	X	20			Brown fine to medium Sand, trace coarse Sand, trace Silt, medium dense-wet		20			7		
15	X	28			@ 15 feet, trace fine Gravel		17					
	X	31			@ 18½ feet, trace Clay lenses, dense-wet		19					
20												
					Gray Brown Clayey Silt, very stiff-wet							
	X	21	2.0				32					
25												
					Gray Clayey Silt, very stiff-wet							
	X	17	3.0				35	54	35	97		
30												
					Dark Gray Silty fine Sand, medium dense-wet							
	X	32					26					
					Dark Gray Silty fine Sand to fine Sandy Silt, dense-wet		26					

TBL 16G136.GPJ SOCALGEO.GDT 5/10/16

SOUTHERN CALIFORNIA GEOTECHNICAL
A California Corporation

BORING NO. B-3

JOB NO.: 16G136
PROJECT: 2 C/I Bldgs
LOCATION: Long Beach, California

DRILLING DATE: 3/30/16
DRILLING METHOD: Hollow Stem Auger
LOGGED BY: Joseph Lozano Leon

WATER DEPTH: 8 feet
CAVE DEPTH: 20 feet
READING TAKEN: At Completion

FIELD RESULTS						LABORATORY RESULTS						
DEPTH (FEET)	SAMPLE	BLOW COUNT	POCKET PEN. (TSF)	GRAPHIC LOG	DESCRIPTION (Continued)	DRY DENSITY (PCF)	MOISTURE CONTENT (%)	LIQUID LIMIT	PLASTIC LIMIT	PASSING #200 SIEVE (%)	UNCONFINED SHEAR (TSF)	COMMENTS
					Dark Gray Silty fine Sand to fine Sandy Silt, dense-wet							
	X	31					27					
40												
					Dark Gray Silty fine Sand, dense-wet							
	X	48					24					
45												
					Gray Clayey Sand, trace to little Silt, trace Clay lenses, very dense-wet							
	X	83					19					
50												
					Boring Terminated at 50'							

TBL 16G136.GPJ SOCALGEO.GDT 5/10/16

SOUTHERN CALIFORNIA GEOTECHNICAL
A California Corporation

BORING NO. B-4

JOB NO.: 16G136
PROJECT: 2 C/I Bldgs
LOCATION: Long Beach, California

DRILLING DATE: 3/30/16
DRILLING METHOD: Hollow Stem Auger
LOGGED BY: Joseph Lozano Leon

WATER DEPTH: 10 feet
CAVE DEPTH: 13 feet
READING TAKEN: At Completion

FIELD RESULTS						LABORATORY RESULTS						
DEPTH (FEET)	SAMPLE	BLOW COUNT	POCKET PEN. (TSF)	GRAPHIC LOG	DESCRIPTION SURFACE ELEVATION: --- MSL	DRY DENSITY (PCF)	MOISTURE CONTENT (%)	LIQUID LIMIT	PLASTIC LIMIT	PASSING #200 SIEVE (%)	UNCONFINED SHEAR (TSF)	COMMENTS
	X	16			FILL: Gray Brown Silty fine Sand to fine Sandy Silt, trace Asphalitc concrete fragments, mottled, medium dense-moist	93	9					EI = 54 @ 0 to 5'
	X	14			FILL: Dark Gray fine Sandy Clay, little Silt, some Organic content, medium dense-very moist	78	38					
5	X	9	4.5+		ALLUVIUM: Dark Gray Silty Clay, trace Iron oxide staining, trace Organic content, porous, medium stiff-moist	89	16					
	X	9	3.0		Dark Gray Brown Silty Clay, abundant Iron oxide staining, trace to little Organic content, medium stiff to stiff-very moist	104	20	55	39			
	X	6	1.0			99	26			87		
10	X	6	2.5		Dark Gray Brown fine Sandy Clay, trace Silt, some Iron oxide staining, trace calcareous veining, loose-wet		27			66		
	X	10			Gray Clayey fine Sand, trace Silt, medium dense-wet @ 13 feet, Water encountered during drilling		22					
15	X	13					24			41		
	X	9					28			37		
20	X	15			@ 20 feet, trace coarse Sand, trace fine Gravel		19			31		
	X	22			Dark Gray Silty fine Sand, trace medium Sand, medium dense-wet		23					
25	X	20					24			21		
	X	28			Gray fine to coarse Sand, trace Silt, trace fine Gravel, medium dense-wet		15					
30												
	X	20	2.0		Gray Clayey Silt to Silty Clay, trace Iron oxide staining, very stiff-wet		35	37	22	98		

TBL 16G136.GPJ SOCALGEO.GDT 5/10/16

SOUTHERN CALIFORNIA GEOTECHNICAL
A California Corporation

BORING NO. B-4

JOB NO.: 16G136
PROJECT: 2 C/I Bldgs
LOCATION: Long Beach, California

DRILLING DATE: 3/30/16
DRILLING METHOD: Hollow Stem Auger
LOGGED BY: Joseph Lozano Leon

WATER DEPTH: 10 feet
CAVE DEPTH: 13 feet
READING TAKEN: At Completion

FIELD RESULTS						LABORATORY RESULTS						
DEPTH (FEET)	SAMPLE	BLOW COUNT	POCKET PEN. (TSF)	GRAPHIC LOG	DESCRIPTION (Continued)	DRY DENSITY (PCF)	MOISTURE CONTENT (%)	LIQUID LIMIT	PLASTIC LIMIT	PASSING #200 SIEVE (%)	UNCONFINED SHEAR (TSF)	COMMENTS
					Gray Clayey Silt to Silty Clay, trace Iron oxide staining, very stiff-wet							
	X	47	2.0				34					
40					Gray fine Sand, trace to little Silt, trace medium Sand, dense to very dense-wet		21					
	X	78					16					
45												
	X	68					18					
50												
					Boring Terminated at 51½'							

TBL 16G136.GPJ SOCALGEO.GDT 5/10/16

SOUTHERN CALIFORNIA GEOTECHNICAL
A California Corporation

BORING NO. B-5

JOB NO.: 16G136
PROJECT: 2 C/I Bldgs
LOCATION: Long Beach, California

DRILLING DATE: 3/30/16
DRILLING METHOD: Hollow Stem Auger
LOGGED BY: Joseph Lozano Leon

WATER DEPTH: Dry
CAVE DEPTH: 2 feet
READING TAKEN: At Completion

FIELD RESULTS						LABORATORY RESULTS						
DEPTH (FEET)	SAMPLE	BLOW COUNT	POCKET PEN. (TSF)	GRAPHIC LOG	DESCRIPTION SURFACE ELEVATION: --- MSL	DRY DENSITY (PCF)	MOISTURE CONTENT (%)	LIQUID LIMIT	PLASTIC LIMIT	PASSING #200 SIEVE (%)	UNCONFINED SHEAR (TSF)	COMMENTS
	X	11	2.0		FILL: Gray Brown Clayey Silt, trace fine Sand, mottled, trace Iron oxide staining, stiff-very moist		20					
	X	8	3.0		FILL: Dark Gray Brown Silty Clay, trace fine Sand, mottled, stiff-moist to very moist		17					
5					Boring Terminated at 5'							

TBL 16G136.GPJ SOCALGEO.GDT 5/10/16

SOUTHERN CALIFORNIA GEOTECHNICAL
A California Corporation

BORING NO. B-6

JOB NO.: 16G136
PROJECT: 2 C/I Bldgs
LOCATION: Long Beach, California

DRILLING DATE: 3/30/16
DRILLING METHOD: Hollow Stem Auger
LOGGED BY: Joseph Lozano Leon

WATER DEPTH: Dry
CAVE DEPTH: 2 feet
READING TAKEN: At Completion

FIELD RESULTS						LABORATORY RESULTS						
DEPTH (FEET)	SAMPLE	BLOW COUNT	POCKET PEN. (TSF)	GRAPHIC LOG	DESCRIPTION SURFACE ELEVATION: --- MSL	DRY DENSITY (PCF)	MOISTURE CONTENT (%)	LIQUID LIMIT	PLASTIC LIMIT	PASSING #200 SIEVE (%)	UNCONFINED SHEAR (TSF)	COMMENTS
					1± inch Open Graded Gravel							
	X	7	1.0		FILL: Brown Clayey Silt, trace fine Sand, trace fine root fibers, trace Orgnaic content, some Iron oxide staining, medium stiff-very moist		24					
	X	11	1.0		FILL: Gray fine Sandy Clay to Silty Clay, trace fine Sand, mottled, medium stiff-very moist		22 12					
5					FILL: Gray fine Sand, trace Silt, little to some Clay clasts, medium dense-moist to very moist							
					Boring Terminated at 5'							

TBL 16G136.GPJ SOCALGEO.GDT 5/10/16

APPENDIX C

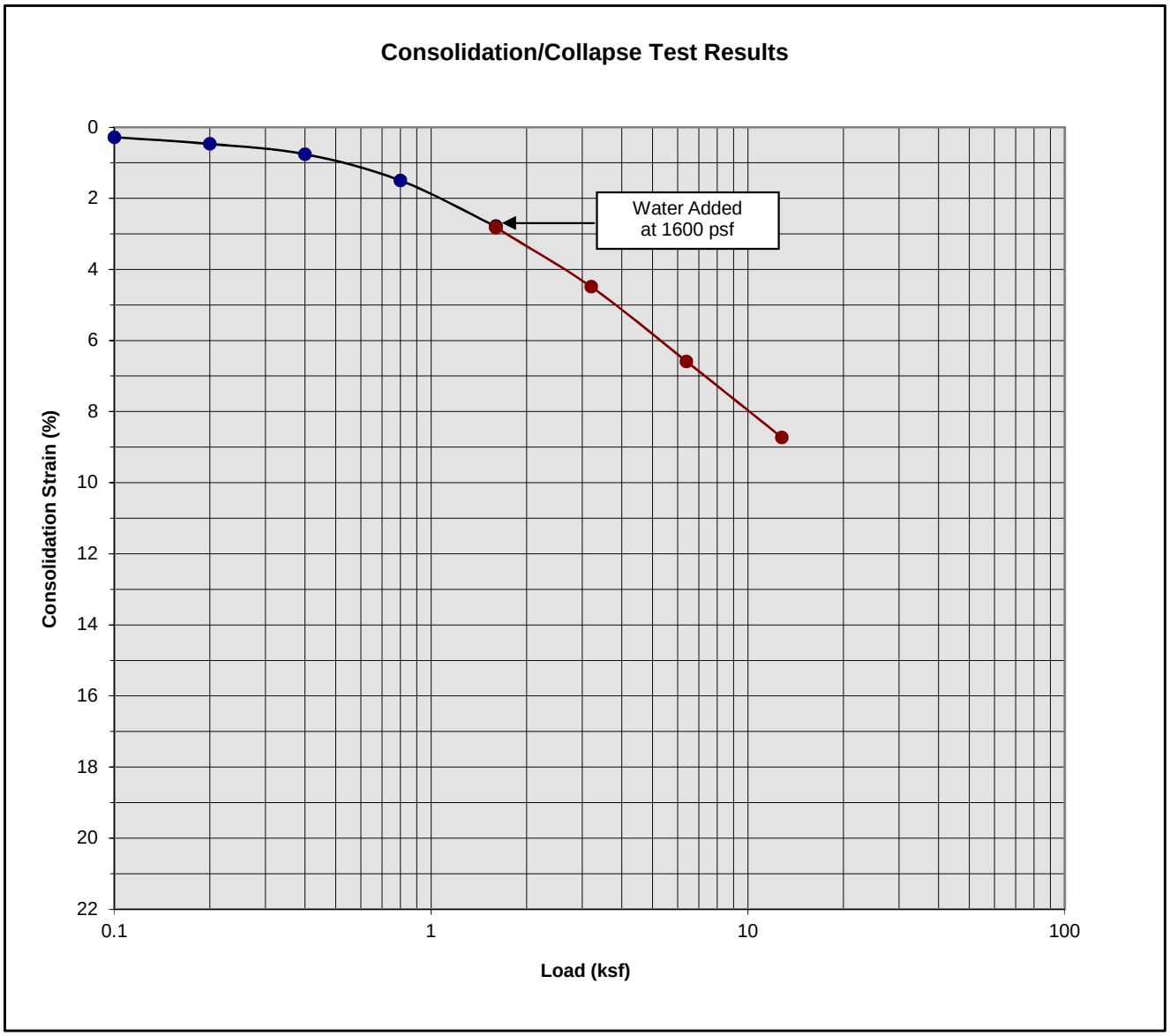

Classification: Fill: Gray Brown fine Sandy Silt

Boring Number:	B-1	Initial Moisture Content (%)	13
Sample Number:	---	Final Moisture Content (%)	21
Depth (ft)	3 to 4	Initial Dry Density (pcf)	103.9
Specimen Diameter (in)	2.4	Final Dry Density (pcf)	109.6
Specimen Thickness (in)	1.0	Percent Collapse (%)	0.03

Two Proposed Commercial/Industrial Buildings
Long Beach, California
Project No. 16G136
PLATE C- 1

SOUTHERN CALIFORNIA GEOTECHNICAL
A California Corporation

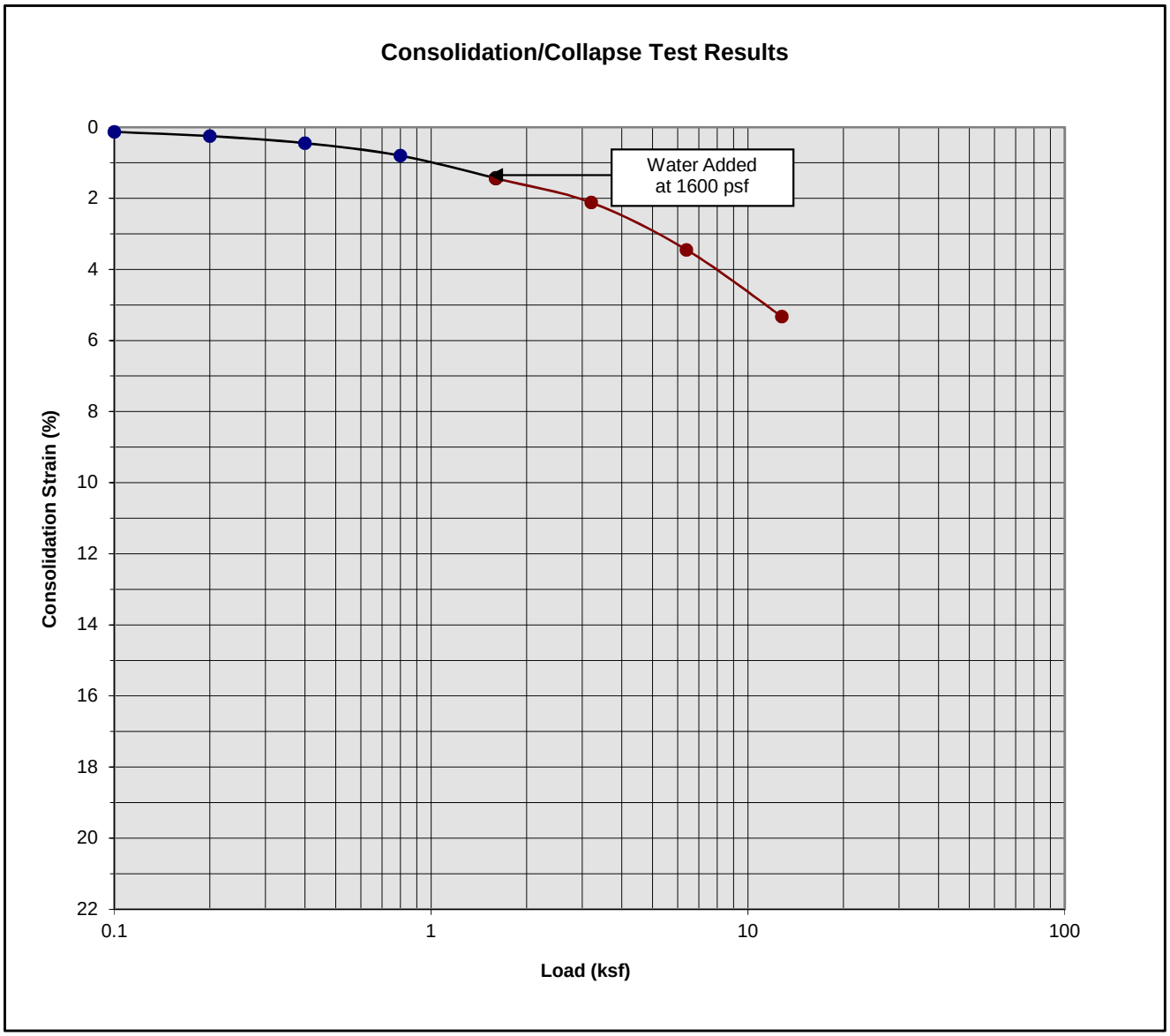

Classification: Fill: Gray Brown Clayey Silt, little fine Sand

Boring Number:	B-1	Initial Moisture Content (%)	22
Sample Number:	---	Final Moisture Content (%)	20
Depth (ft)	5 to 6	Initial Dry Density (pcf)	98.5
Specimen Diameter (in)	2.4	Final Dry Density (pcf)	105.7
Specimen Thickness (in)	1.0	Percent Collapse (%)	0.01

Two Proposed Commercial/Industrial Buildings
Long Beach, California
Project No. 16G136
PLATE C- 2

SOUTHERN CALIFORNIA GEOTECHNICAL
A California Corporation

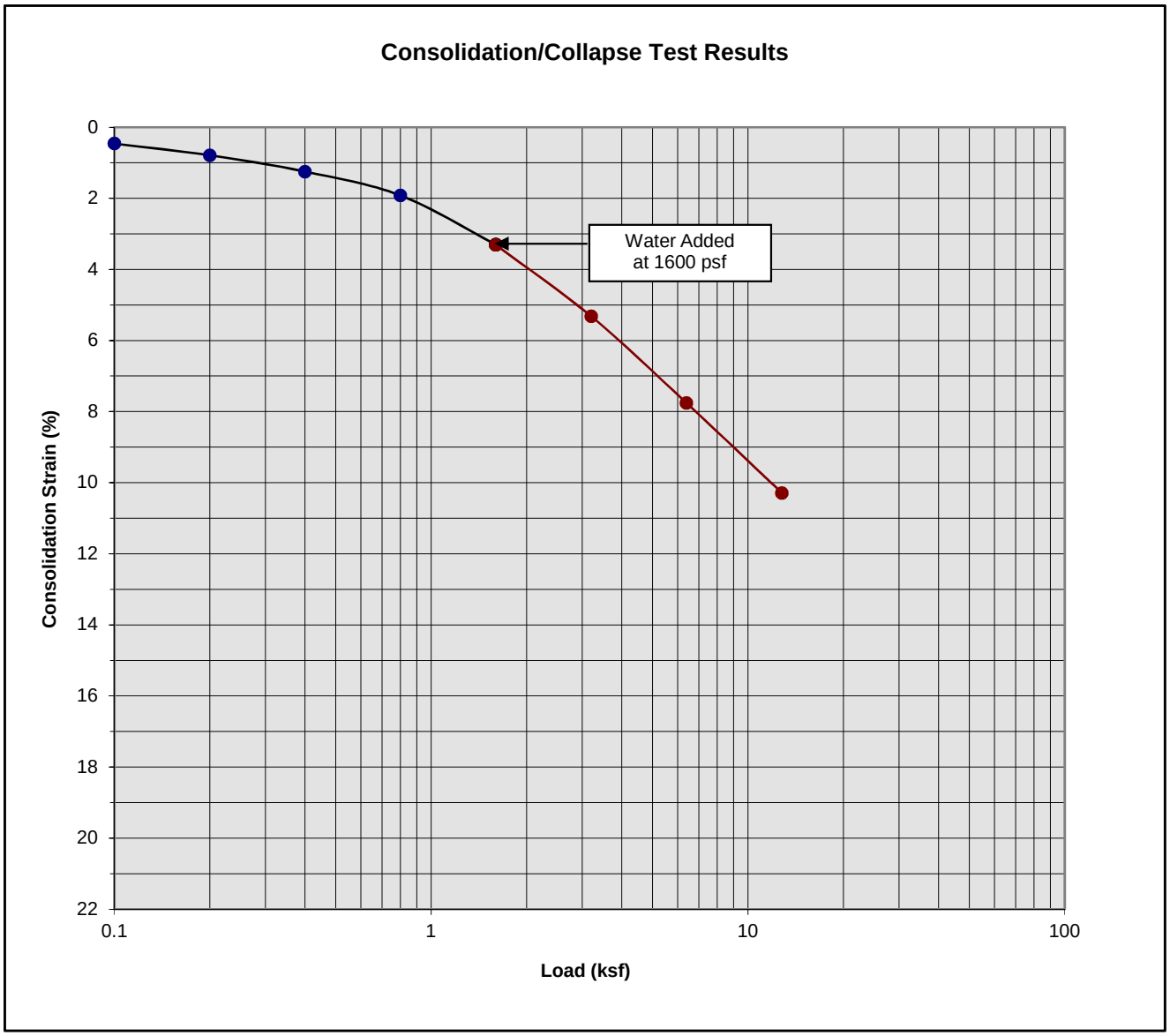

Classification: Gray fine Sandy Silt, some Organic fibers

Boring Number:	B-1	Initial Moisture Content (%)	34
Sample Number:	---	Final Moisture Content (%)	31
Depth (ft)	7 to 8	Initial Dry Density (pcf)	86.5
Specimen Diameter (in)	2.4	Final Dry Density (pcf)	96.5
Specimen Thickness (in)	1.0	Percent Collapse (%)	0.01

Two Proposed Commercial/Industrial Buildings
Long Beach, California
Project No. 16G136
PLATE C- 3

SOUTHERN CALIFORNIA GEOTECHNICAL
A California Corporation

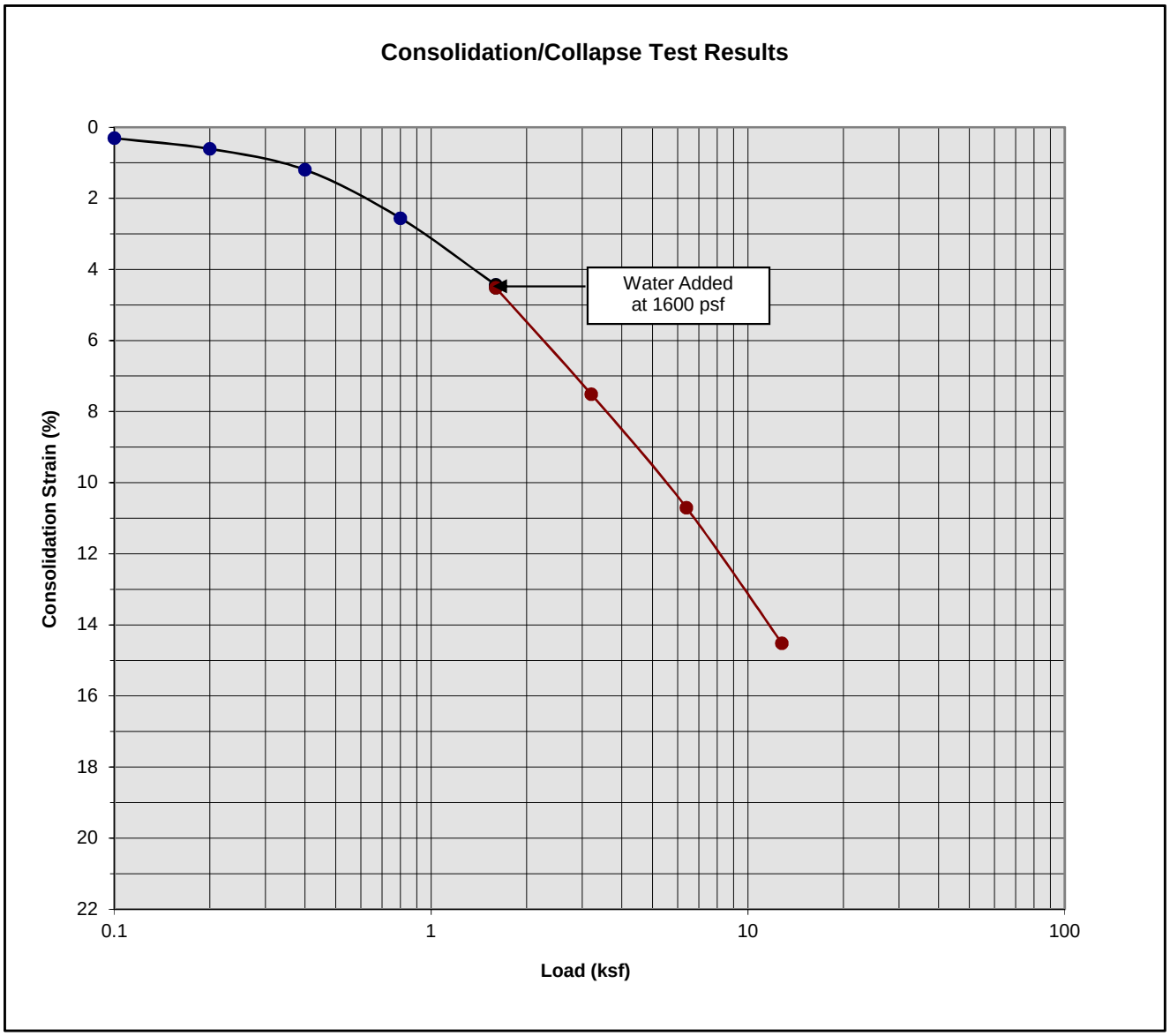

Classification: Gray Clayey Silt, abundant Organic content

Boring Number:	B-1	Initial Moisture Content (%)	43
Sample Number:	---	Final Moisture Content (%)	41
Depth (ft)	9 to 10	Initial Dry Density (pcf)	76.1
Specimen Diameter (in)	2.4	Final Dry Density (pcf)	89.2
Specimen Thickness (in)	1.0	Percent Collapse (%)	0.08

Two Proposed Commercial/Industrial Buildings
Long Beach, California
Project No. 16G136
PLATE C- 4

SOUTHERN CALIFORNIA GEOTECHNICAL
A California Corporation

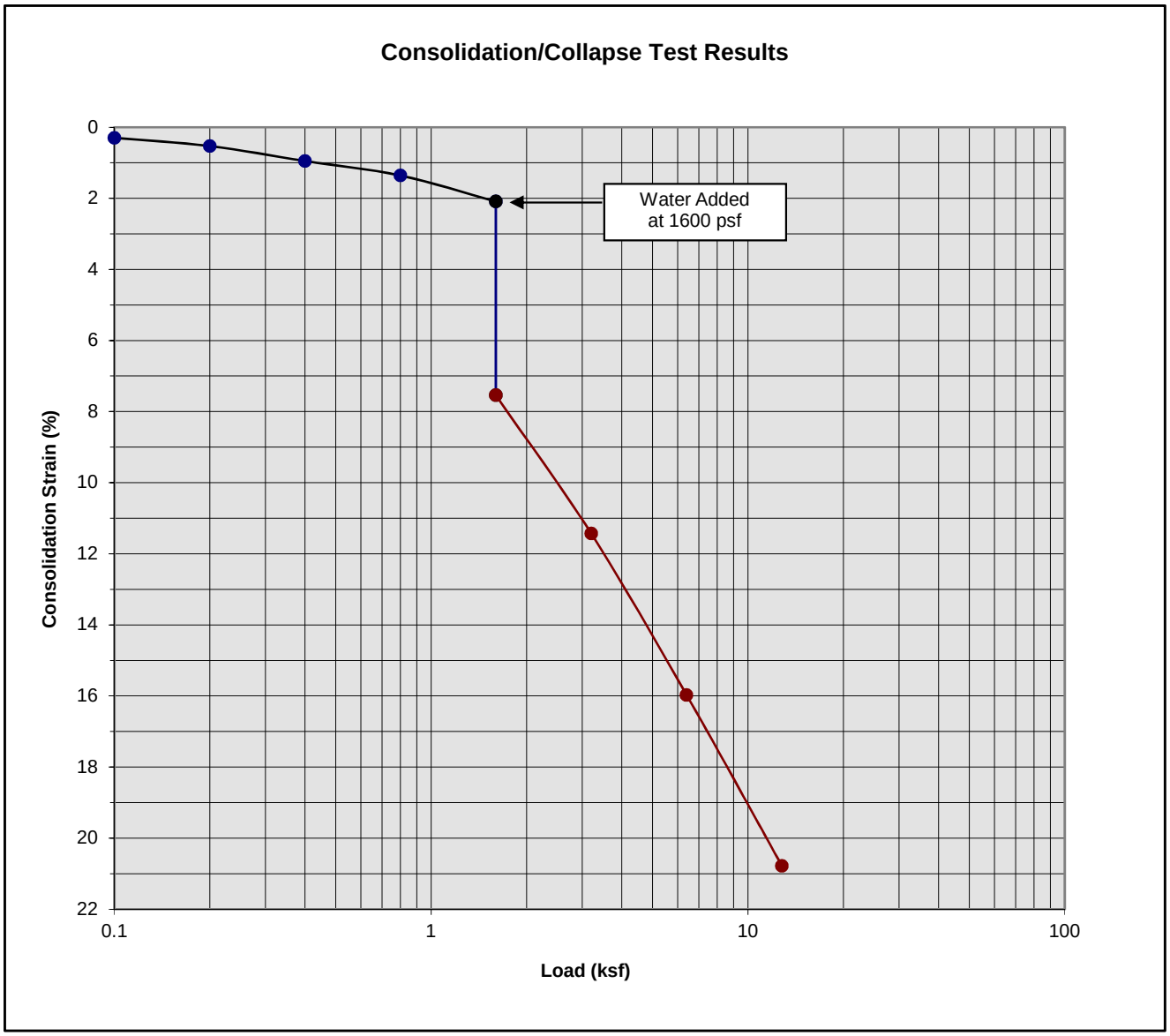

Classification: FILL: Dark Gray fine Sandy Clay, little Silt

Boring Number:	B-4	Initial Moisture Content (%)	38
Sample Number:	---	Final Moisture Content (%)	35
Depth (ft)	3 to 4	Initial Dry Density (pcf)	78.6
Specimen Diameter (in)	2.4	Final Dry Density (pcf)	100.7
Specimen Thickness (in)	1.0	Percent Collapse (%)	5.45

Two Proposed Commercial/Industrial Buildings
Long Beach, California
Project No. 16G136
PLATE C- 5

SOUTHERN CALIFORNIA GEOTECHNICAL
A California Corporation

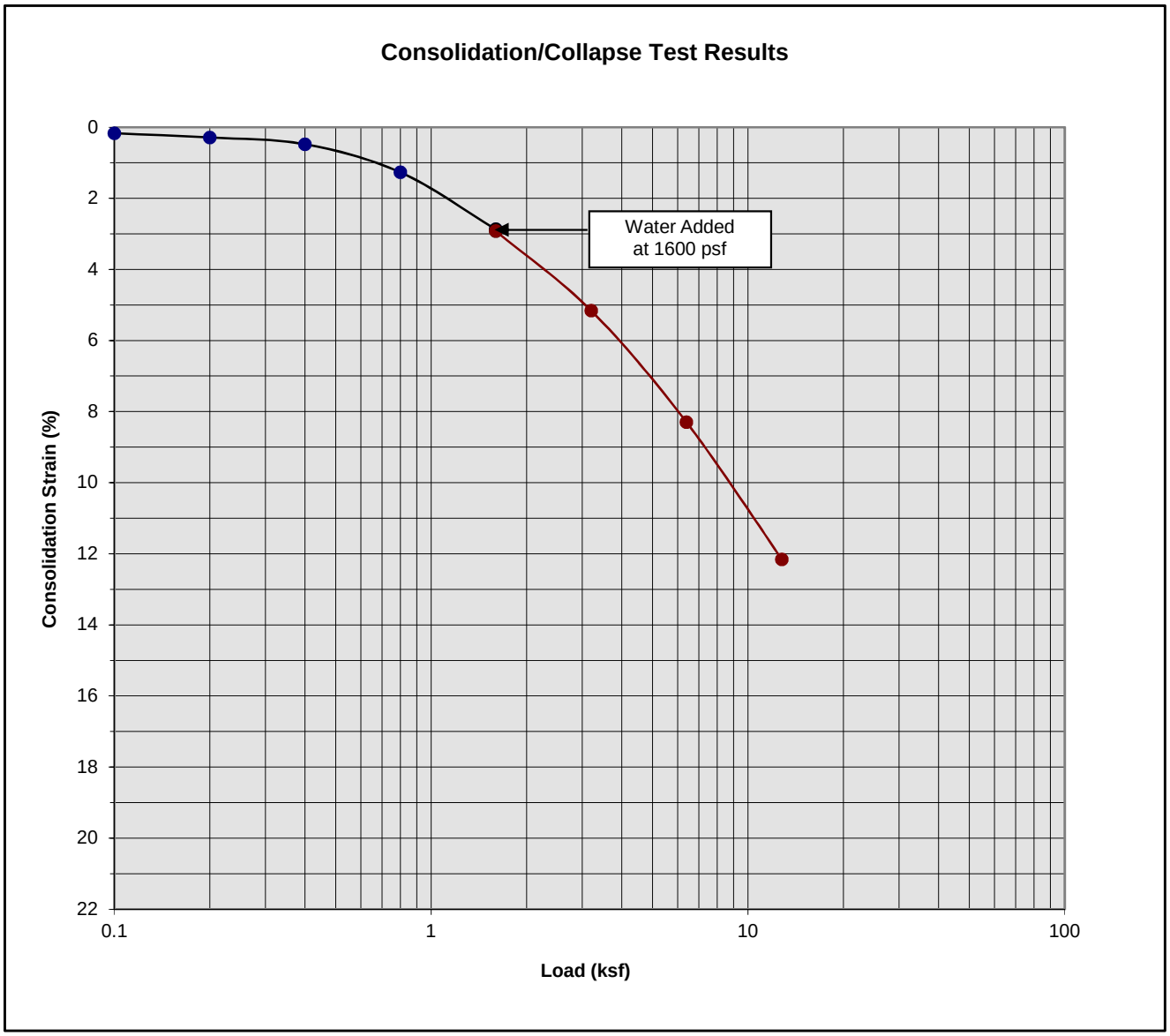

Classification: Dark Gray Silty Clay

Boring Number:	B-4	Initial Moisture Content (%)	16
Sample Number:	---	Final Moisture Content (%)	22
Depth (ft)	5 to 6	Initial Dry Density (pcf)	89.3
Specimen Diameter (in)	2.4	Final Dry Density (pcf)	101.3
Specimen Thickness (in)	1.0	Percent Collapse (%)	0.05

Two Proposed Commercial/Industrial Buildings
Long Beach, California
Project No. 16G136
PLATE C- 6

SOUTHERN CALIFORNIA GEOTECHNICAL
A California Corporation

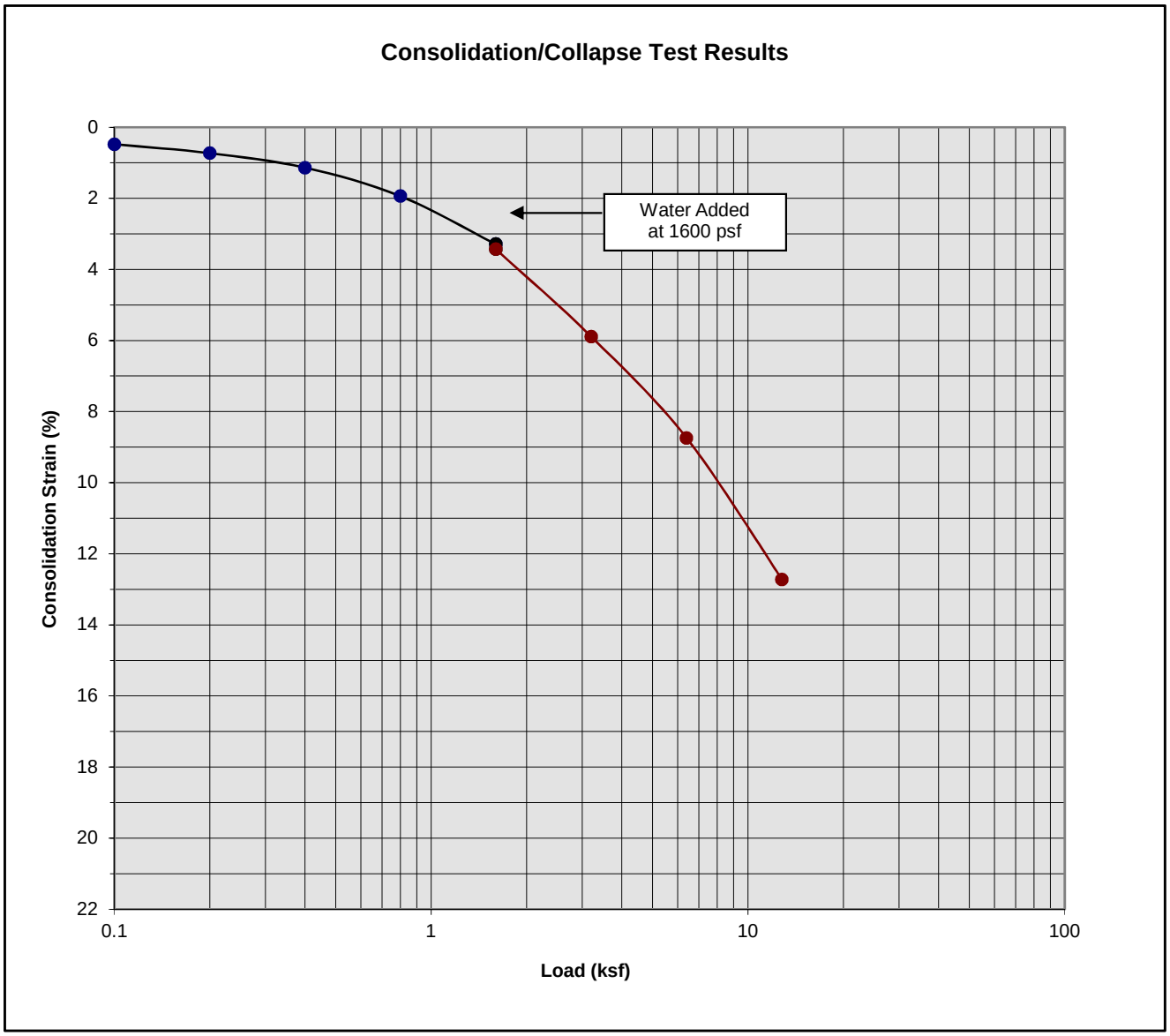

Classification: Dark Gray Brown Silty Clay

Boring Number:	B-4	Initial Moisture Content (%)	21
Sample Number:	---	Final Moisture Content (%)	20
Depth (ft)	7 to 8	Initial Dry Density (pcf)	104.0
Specimen Diameter (in)	2.4	Final Dry Density (pcf)	119.7
Specimen Thickness (in)	1.0	Percent Collapse (%)	0.14

Two Proposed Commercial/Industrial Buildings
Long Beach, California
Project No. 16G136
PLATE C- 7

SOUTHERN CALIFORNIA GEOTECHNICAL
A California Corporation

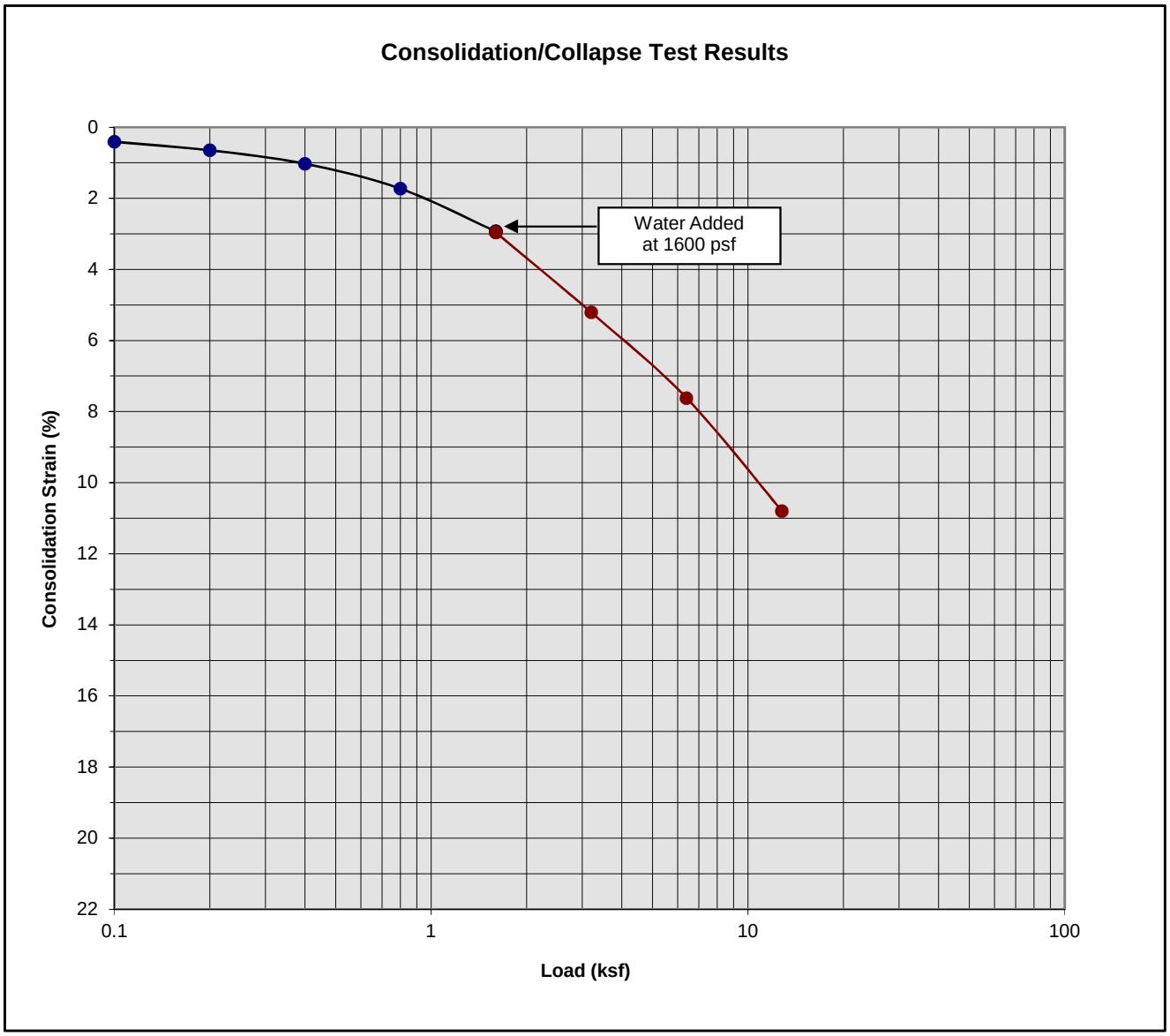

Classification: Dark Gray Brown Silty Clay

Boring Number:	B-4	Initial Moisture Content (%)	26
Sample Number:	---	Final Moisture Content (%)	22
Depth (ft)	9 to 10	Initial Dry Density (pcf)	98.7
Specimen Diameter (in)	2.4	Final Dry Density (pcf)	111.3
Specimen Thickness (in)	1.0	Percent Collapse (%)	0.03

Two Proposed Commercial/Industrial Buildings
Long Beach, California
Project No. 16G136
PLATE C- 8

SOUTHERN CALIFORNIA GEOTECHNICAL
A California Corporation

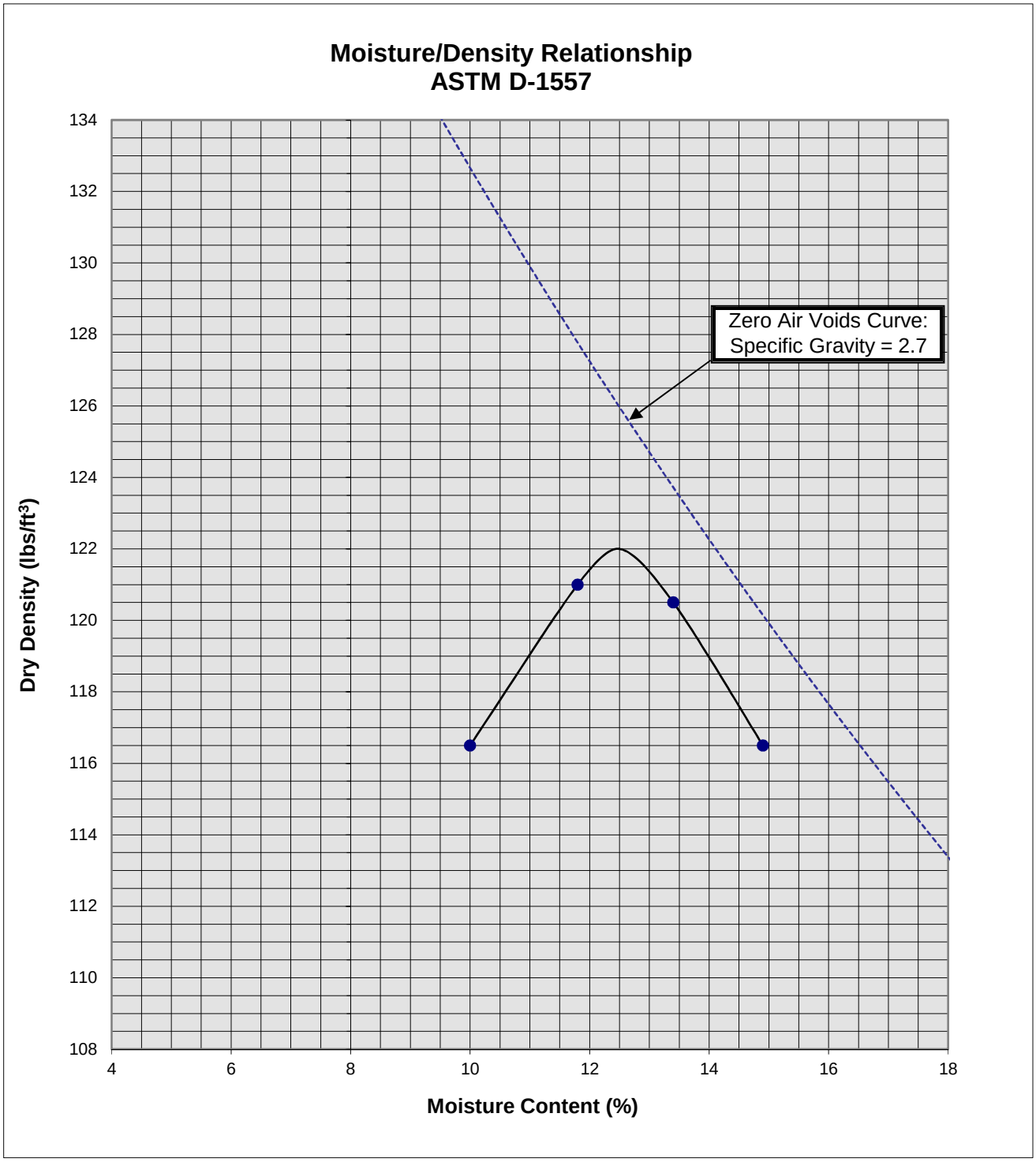

Soil ID Number	B-1 @ 0 to 5'
Optimum Moisture (%)	12.5
Maximum Dry Density (pcf)	122
Soil Classification	Brown fine Sandy Silt, little Clay, trace fine Gravel

Two Proposed Commercial/Industrial Buildings
Long Beach, California
Project No. 16G136
PLATE C-9

SOUTHERN CALIFORNIA GEOTECHNICAL
A California Corporation

APPENDIX D

GRADING GUIDE SPECIFICATIONS

These grading guide specifications are intended to provide typical procedures for grading operations. They are intended to supplement the recommendations contained in the geotechnical investigation report for this project. Should the recommendations in the geotechnical investigation report conflict with the grading guide specifications, the more site specific recommendations in the geotechnical investigation report will govern.

General

- The Earthwork Contractor is responsible for the satisfactory completion of all earthwork in accordance with the plans and geotechnical reports, and in accordance with city, county, and applicable building codes.

- The Geotechnical Engineer is the representative of the Owner/Builder for the purpose of implementing the report recommendations and guidelines. These duties are not intended to relieve the Earthwork Contractor of any responsibility to perform in a workman-like manner, nor is the Geotechnical Engineer to direct the grading equipment or personnel employed by the Contractor.

- The Earthwork Contractor is required to notify the Geotechnical Engineer of the anticipated work and schedule so that testing and inspections can be provided. If necessary, work may be stopped and redone if personnel have not been scheduled in advance.

- The Earthwork Contractor is required to have suitable and sufficient equipment on the job-site to process, moisture condition, mix and compact the amount of fill being placed to the approved compaction. In addition, suitable support equipment should be available to conform with recommendations and guidelines in this report.

- Canyon cleanouts, overexcavation areas, processed ground to receive fill, key excavations, subdrains and benches should be observed by the Geotechnical Engineer prior to placement of any fill. It is the Earthwork Contractor's responsibility to notify the Geotechnical Engineer of areas that are ready for inspection.

- Excavation, filling, and subgrade preparation should be performed in a manner and sequence that will provide drainage at all times and proper control of erosion. Precipitation, springs, and seepage water encountered shall be pumped or drained to provide a suitable working surface. The Geotechnical Engineer must be informed of springs or water seepage encountered during grading or foundation construction for possible revision to the recommended construction procedures and/or installation of subdrains.

Site Preparation

- The Earthwork Contractor is responsible for all clearing, grubbing, stripping and site preparation for the project in accordance with the recommendations of the Geotechnical Engineer.

- If any materials or areas are encountered by the Earthwork Contractor which are suspected of having toxic or environmentally sensitive contamination, the Geotechnical Engineer and Owner/Builder should be notified immediately.

- Major vegetation should be stripped and disposed of off-site. This includes trees, brush, heavy grasses and any materials considered unsuitable by the Geotechnical Engineer.

- Underground structures such as basements, cesspools or septic disposal systems, mining shafts, tunnels, wells and pipelines should be removed under the inspection of the Geotechnical Engineer and recommendations provided by the Geotechnical Engineer and/or city, county or state agencies. If such structures are known or found, the Geotechnical Engineer should be notified as soon as possible so that recommendations can be formulated.

- Any topsoil, slopewash, colluvium, alluvium and rock materials which are considered unsuitable by the Geotechnical Engineer should be removed prior to fill placement.

- Remaining voids created during site clearing caused by removal of trees, foundations basements, irrigation facilities, etc., should be excavated and filled with compacted fill.

- Subsequent to clearing and removals, areas to receive fill should be scarified to a depth of 10 to 12 inches, moisture conditioned and compacted

- The moisture condition of the processed ground should be at or slightly above the optimum moisture content as determined by the Geotechnical Engineer. Depending upon field conditions, this may require air drying or watering together with mixing and/or discing.

Compacted Fills

- Soil materials imported to or excavated on the property may be utilized in the fill, provided each material has been determined to be suitable in the opinion of the Geotechnical Engineer. Unless otherwise approved by the Geotechnical Engineer, all fill materials shall be free of deleterious, organic, or frozen matter, shall contain no chemicals that may result in the material being classified as “contaminated,” and shall be very low to non-expansive with a maximum expansion index (EI) of 50. The top 12 inches of the compacted fill should have a maximum particle size of 3 inches, and all underlying compacted fill material a maximum 6-inch particle size, except as noted below.

- All soils should be evaluated and tested by the Geotechnical Engineer. Materials with high expansion potential, low strength, poor gradation or containing organic materials may require removal from the site or selective placement and/or mixing to the satisfaction of the Geotechnical Engineer.

- Rock fragments or rocks less than 6 inches in their largest dimensions, or as otherwise determined by the Geotechnical Engineer, may be used in compacted fill, provided the distribution and placement is satisfactory in the opinion of the Geotechnical Engineer.

- Rock fragments or rocks greater than 12 inches should be taken off-site or placed in accordance with recommendations and in areas designated as suitable by the Geotechnical Engineer. These materials should be placed in accordance with Plate D-8 of these Grading Guide Specifications and in accordance with the following recommendations:

    - Rocks 12 inches or more in diameter should be placed in rows at least 15 feet apart, 15 feet from the edge of the fill, and 10 feet or more below subgrade. Spaces should be left between each rock fragment to provide for placement and compaction of soil around the fragments.

    - Fill materials consisting of soil meeting the minimum moisture content requirements and free of oversize material should be placed between and over the rows of rock or

concrete. Ample water and compactive effort should be applied to the fill materials as they are placed in order that all of the voids between each of the fragments are filled and compacted to the specified density.

- Subsequent rows of rocks should be placed such that they are not directly above a row placed in the previous lift of fill. A minimum 5-foot offset between rows is recommended.

- To facilitate future trenching, oversized material should not be placed within the range of foundation excavations, future utilities or other underground construction unless specifically approved by the soil engineer and the developer/owner representative.

- Fill materials approved by the Geotechnical Engineer should be placed in areas previously prepared to receive fill and in evenly placed, near horizontal layers at about 6 to 8 inches in loose thickness, or as otherwise determined by the Geotechnical Engineer for the project.

- Each layer should be moisture conditioned to optimum moisture content, or slightly above, as directed by the Geotechnical Engineer. After proper mixing and/or drying, to evenly distribute the moisture, the layers should be compacted to at least 90 percent of the maximum dry density in compliance with ASTM D-1557-78 unless otherwise indicated.

- Density and moisture content testing should be performed by the Geotechnical Engineer at random intervals and locations as determined by the Geotechnical Engineer. These tests are intended as an aid to the Earthwork Contractor, so he can evaluate his workmanship, equipment effectiveness and site conditions. The Earthwork Contractor is responsible for compaction as required by the Geotechnical Report(s) and governmental agencies.

- Fill areas unused for a period of time may require moisture conditioning, processing and recompaction prior to the start of additional filling. The Earthwork Contractor should notify the Geotechnical Engineer of his intent so that an evaluation can be made.

- Fill placed on ground sloping at a 5-to-1 inclination (horizontal-to-vertical) or steeper should be benched into bedrock or other suitable materials, as directed by the Geotechnical Engineer. Typical details of benching are illustrated on Plates D-2, D-4, and D-5.

- Cut/fill transition lots should have the cut portion overexcavated to a depth of at least 3 feet and rebuilt with fill (see Plate D-1), as determined by the Geotechnical Engineer.

- All cut lots should be inspected by the Geotechnical Engineer for fracturing and other bedrock conditions. If necessary, the pads should be overexcavated to a depth of 3 feet and rebuilt with a uniform, more cohesive soil type to impede moisture penetration.

- Cut portions of pad areas above buttresses or stabilizations should be overexcavated to a depth of 3 feet and rebuilt with uniform, more cohesive compacted fill to impede moisture penetration.

- Non-structural fill adjacent to structural fill should typically be placed in unison to provide lateral support. Backfill along walls must be placed and compacted with care to ensure that excessive unbalanced lateral pressures do not develop. The type of fill material placed adjacent to below grade walls must be properly tested and approved by the Geotechnical Engineer with consideration of the lateral earth pressure used in the design.

Foundations

- The foundation influence zone is defined as extending one foot horizontally from the outside edge of a footing, and proceeding downward at a ½ horizontal to 1 vertical (0.5:1) inclination.

- Where overexcavation beneath a footing subgrade is necessary, it should be conducted so as to encompass the entire foundation influence zone, as described above.

- Compacted fill adjacent to exterior footings should extend at least 12 inches above foundation bearing grade. Compacted fill within the interior of structures should extend to the floor subgrade elevation.

Fill Slopes

- The placement and compaction of fill described above applies to all fill slopes. Slope compaction should be accomplished by overfilling the slope, adequately compacting the fill in even layers, including the overfilled zone and cutting the slope back to expose the compacted core

- Slope compaction may also be achieved by backrolling the slope adequately every 2 to 4 vertical feet during the filling process as well as requiring the earth moving and compaction equipment to work close to the top of the slope. Upon completion of slope construction, the slope face should be compacted with a sheepsfoot connected to a sideboom and then grid rolled. This method of slope compaction should only be used if approved by the Geotechnical Engineer.

- Sandy soils lacking in adequate cohesion may be unstable for a finished slope condition and therefore should not be placed within 15 horizontal feet of the slope face.

- All fill slopes should be keyed into bedrock or other suitable material. Fill keys should be at least 15 feet wide and inclined at 2 percent into the slope. For slopes higher than 30 feet, the fill key width should be equal to one-half the height of the slope (see Plate D-5).

- All fill keys should be cleared of loose slough material prior to geotechnical inspection and should be approved by the Geotechnical Engineer and governmental agencies prior to filling.

- The cut portion of fill over cut slopes should be made first and inspected by the Geotechnical Engineer for possible stabilization requirements. The fill portion should be adequately keyed through all surficial soils and into bedrock or suitable material. Soils should be removed from the transition zone between the cut and fill portions (see Plate D-2).

Cut Slopes

- All cut slopes should be inspected by the Geotechnical Engineer to determine the need for stabilization. The Earthwork Contractor should notify the Geotechnical Engineer when slope cutting is in progress at intervals of 10 vertical feet. Failure to notify may result in a delay in recommendations.

- Cut slopes exposing loose, cohesionless sands should be reported to the Geotechnical Engineer for possible stabilization recommendations.

- All stabilization excavations should be cleared of loose slough material prior to geotechnical inspection. Stakes should be provided by the Civil Engineer to verify the location and dimensions of the key. A typical stabilization fill detail is shown on Plate D-5.

- Stabilization key excavations should be provided with subdrains. Typical subdrain details are shown on Plates D-6.

Subdrains

- Subdrains may be required in canyons and swales where fill placement is proposed. Typical subdrain details for canyons are shown on Plate D-3. Subdrains should be installed after approval of removals and before filling, as determined by the Soils Engineer.

- Plastic pipe may be used for subdrains provided it is Schedule 40 or SDR 35 or equivalent. Pipe should be protected against breakage, typically by placement in a square-cut (backhoe) trench or as recommended by the manufacturer.

- Filter material for subdrains should conform to CALTRANS Specification 68-1.025 or as approved by the Geotechnical Engineer for the specific site conditions. Clean ¾-inch crushed rock may be used provided it is wrapped in an acceptable filter cloth and approved by the Geotechnical Engineer. Pipe diameters should be 6 inches for runs up to 500 feet and 8 inches for the downstream continuations of longer runs. Four-inch diameter pipe may be used in buttress and stabilization fills.

CUT LOT

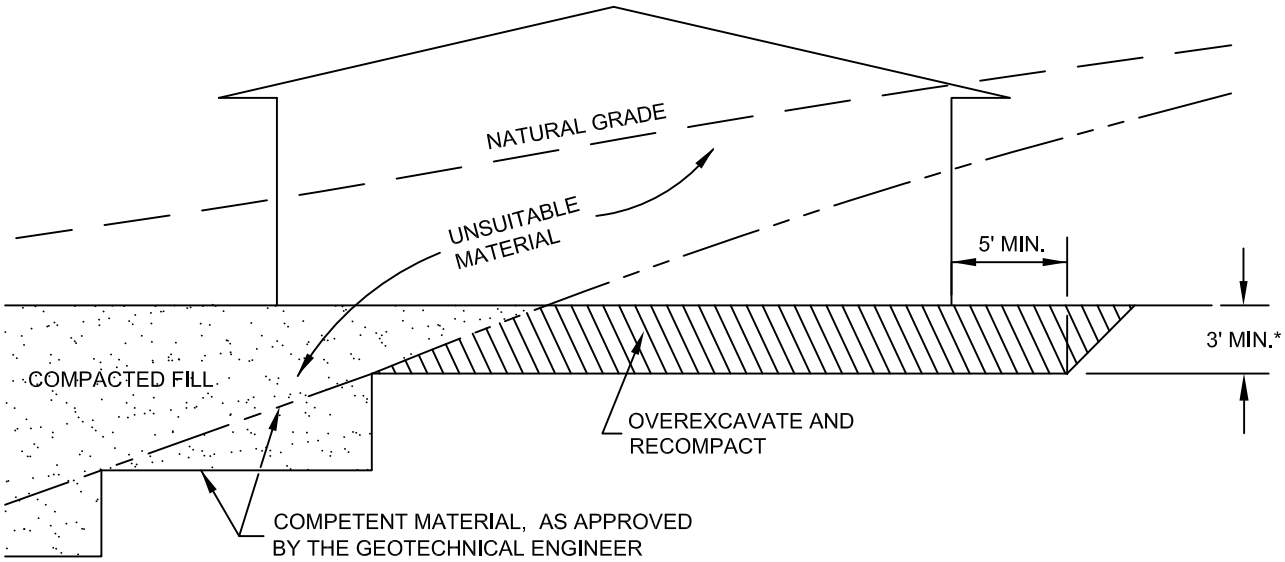

CUT/FILL LOT (TRANSITION)

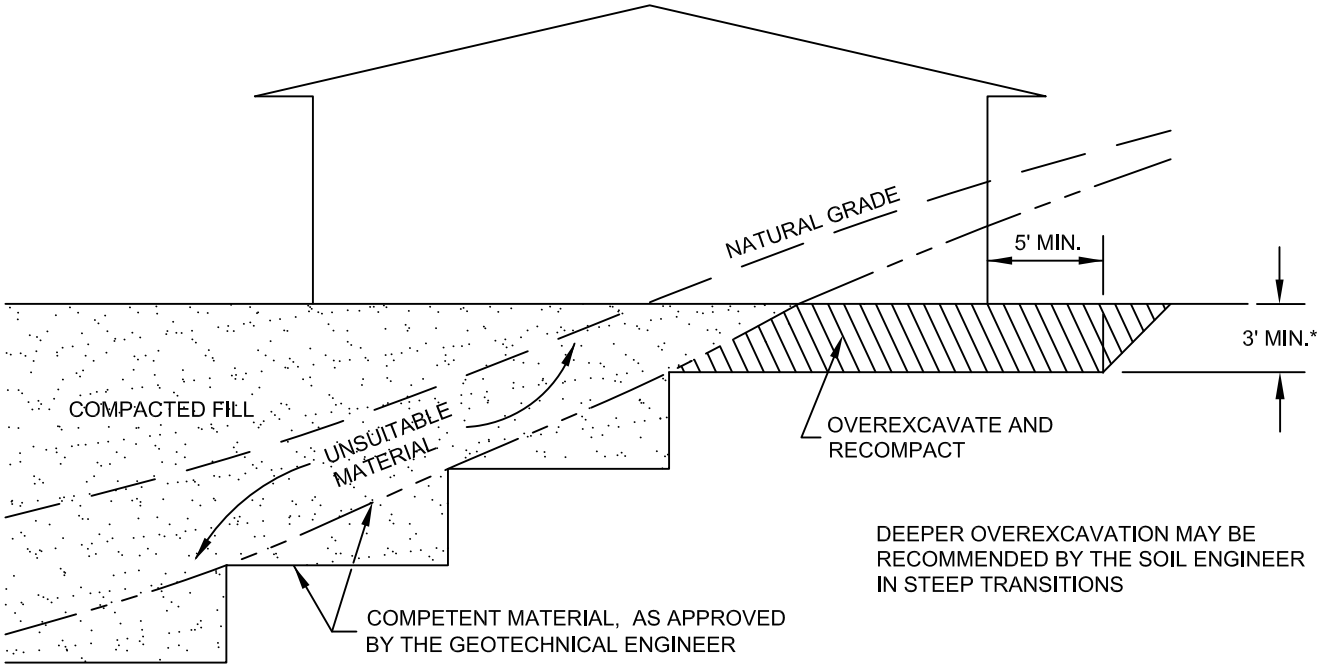

*SEE TEXT OF REPORT FOR SPECIFIC RECOMMENDATION.
ACTUAL DEPTH OF OVEREXCAVATION MAY BE GREATER.

TRANSITION LOT DETAIL

GRADING GUIDE SPECIFICATIONS

NOT TO SCALE

DRAWN: JAS
CHKD: GKM

PLATE D-1

SoCalGeo
SOUTHERN CALIFORNIA GEOTECHNICAL

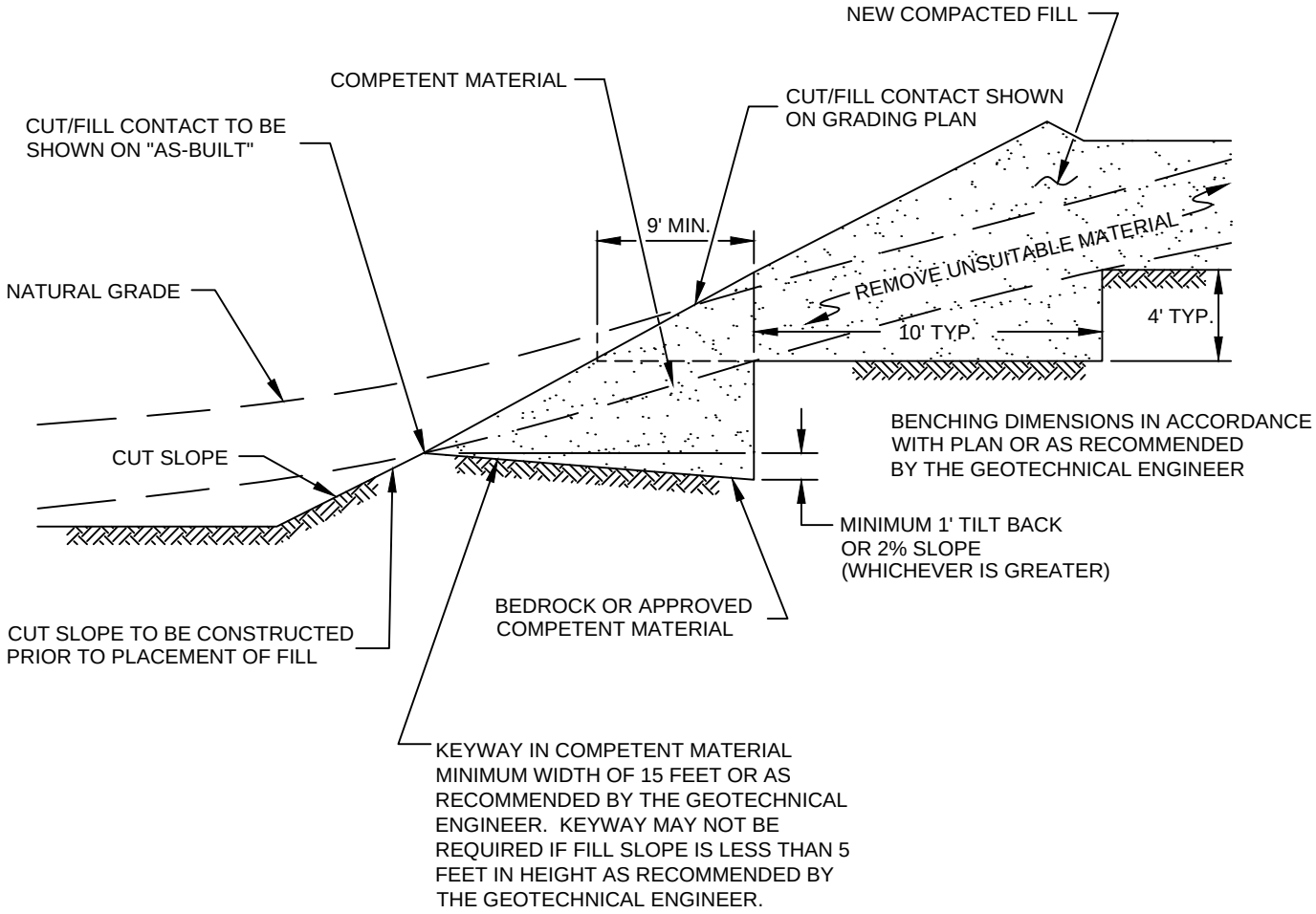

FILL ABOVE CUT SLOPE DETAIL

GRADING GUIDE SPECIFICATIONS

NOT TO SCALE

DRAWN: JAS
CHKD: GKM

PLATE D-2

SOUTHERN CALIFORNIA GEOTECHNICAL

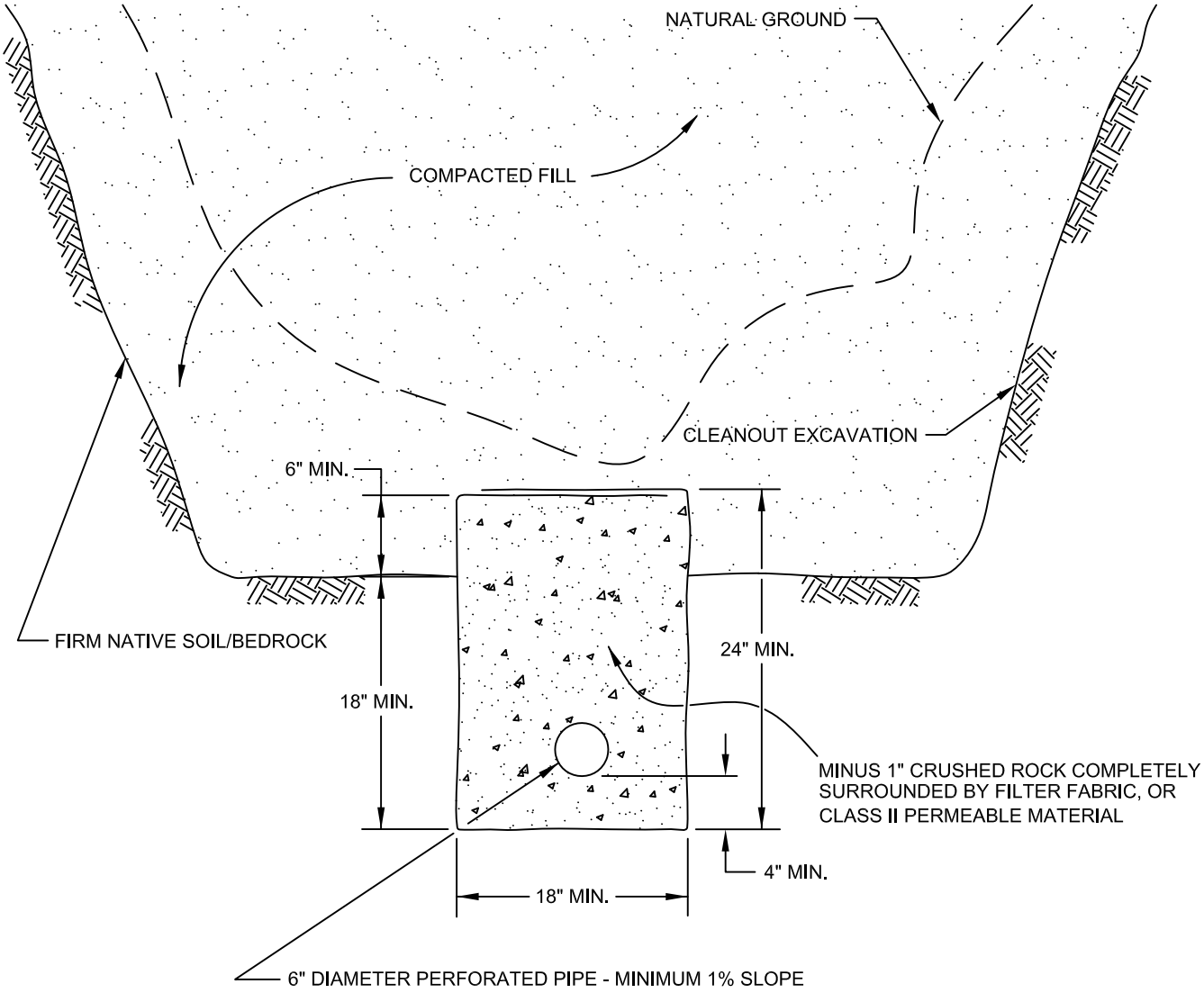

PIPE MATERIAL	DEPTH OF FILL OVER SUBDRAIN
ADS (CORRUGATED POLETHYLENE)	8
TRANSITE UNDERDRAIN	20
PVC OR ABS: SDR 35	35
SDR 21	100

SCHEMATIC ONLY
NOT TO SCALE

CANYON SUBDRAIN DETAIL

GRADING GUIDE SPECIFICATIONS

NOT TO SCALE

DRAWN: JAS
CHKD: GKM

PLATE D-3

SOUTHERN CALIFORNIA GEOTECHNICAL

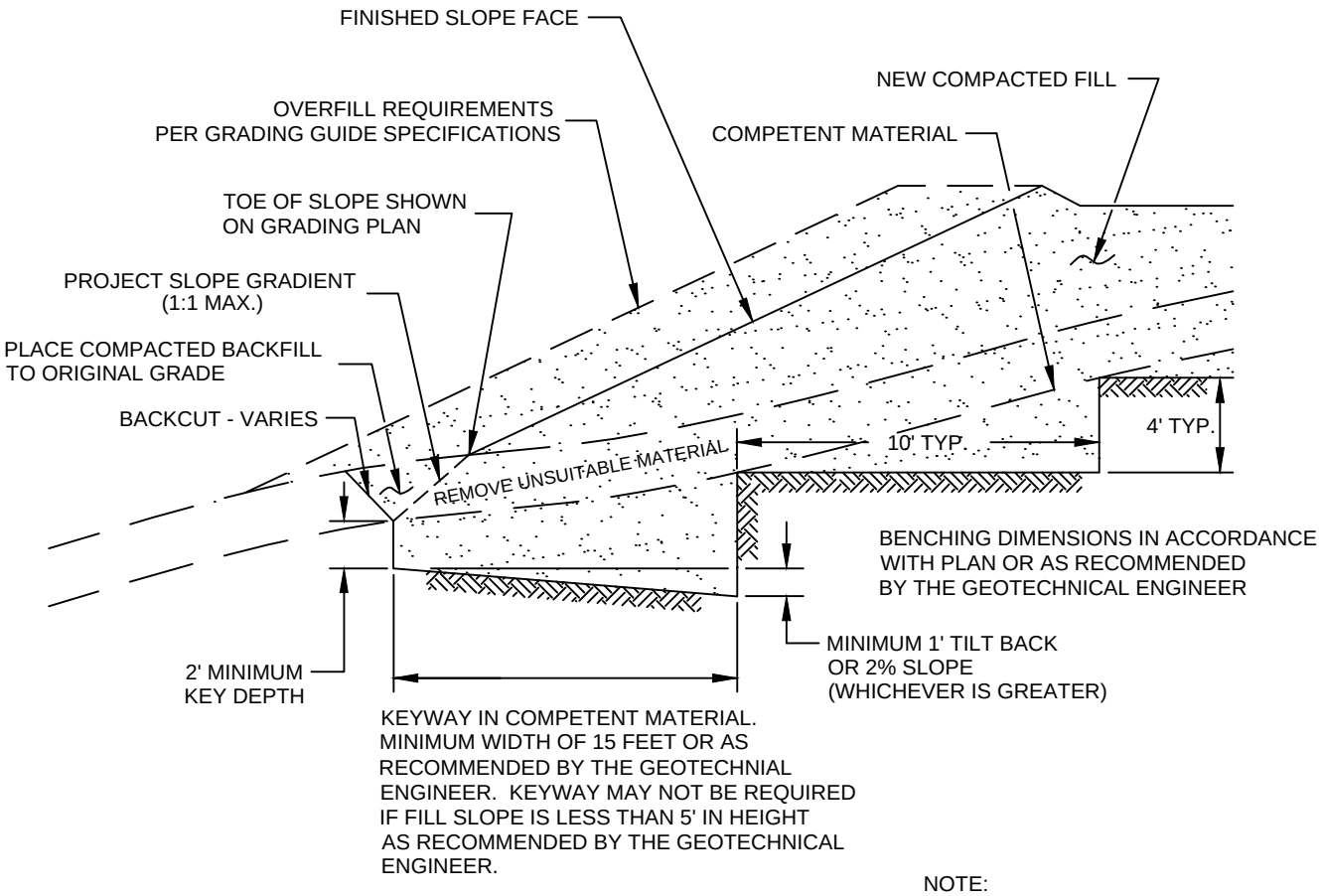

NOTE:
BENCHING SHALL BE REQUIRED
WHEN NATURAL SLOPES ARE
EQUAL TO OR STEEPER THAN 5:1
OR WHEN RECOMMENDED BY
THE GEOTECHNICAL ENGINEER.

FILL ABOVE NATURAL SLOPE DETAIL

GRADING GUIDE SPECIFICATIONS

NOT TO SCALE

DRAWN: JAS
CHKD: GKM

PLATE D-4

SoCalGeo
SOUTHERN CALIFORNIA GEOTECHNICAL

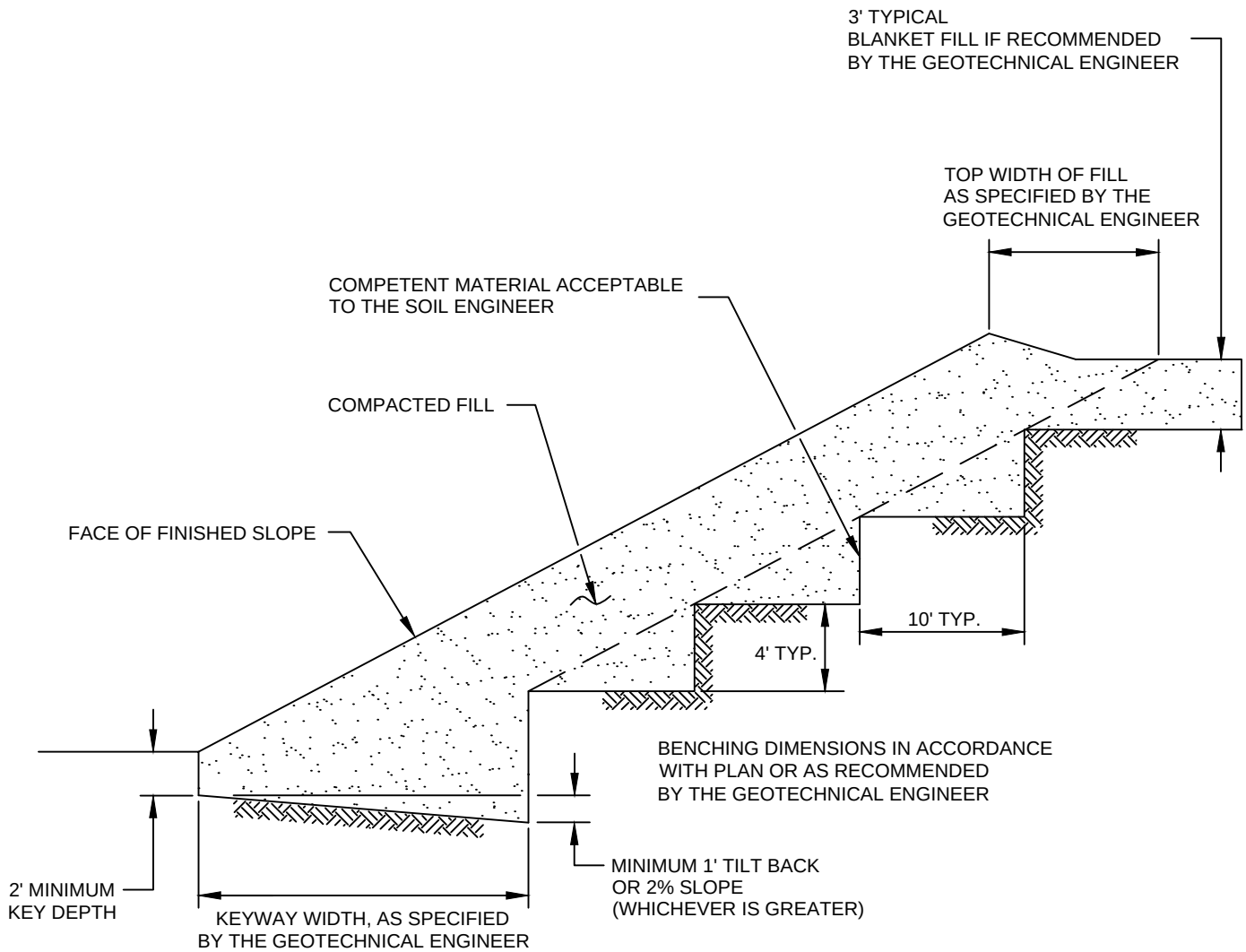

STABILIZATION FILL DETAIL

GRADING GUIDE SPECIFICATIONS

NOT TO SCALE

DRAWN: JAS
CHKD: GKM

PLATE D-5

SOUTHERN CALIFORNIA GEOTECHNICAL

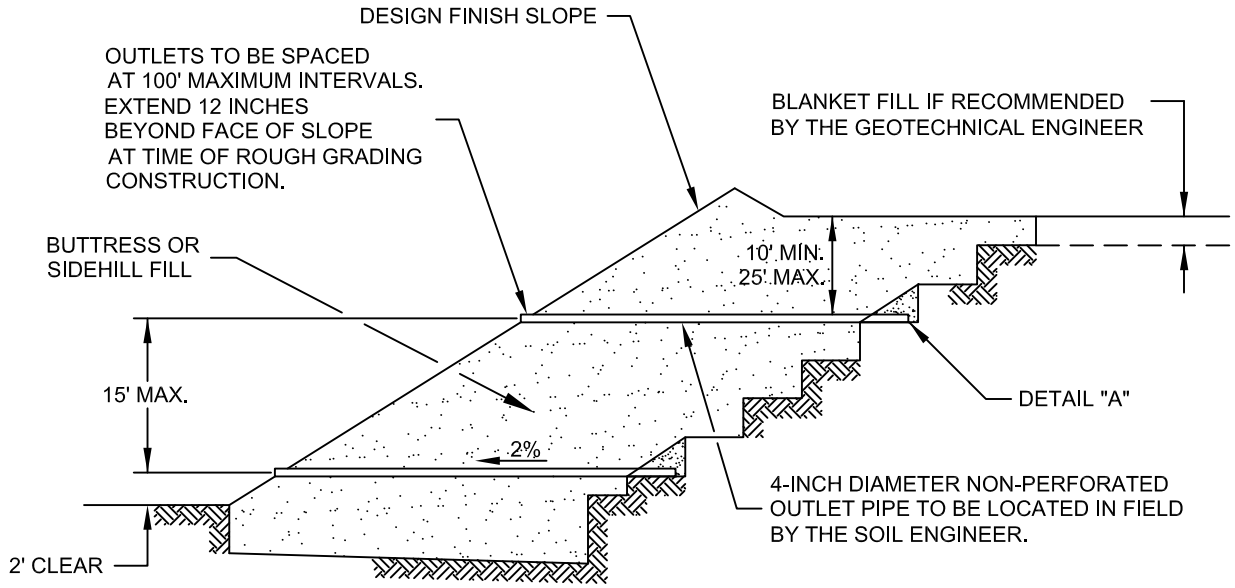

"FILTER MATERIAL" TO MEET FOLLOWING SPECIFICATION OR APPROVED EQUIVALENT: (CONFORMS TO EMA STD. PLAN 323)

SIEVE SIZE	PERCENTAGE PASSING
1"	100
3/4"	90-100
3/8"	40-100
NO. 4	25-40
NO. 8	18-33
NO. 30	5-15
NO. 50	0-7
NO. 200	0-3

"GRAVEL" TO MEET FOLLOWING SPECIFICATION OR APPROVED EQUIVALENT:

SIEVE SIZE	MAXIMUM PERCENTAGE PASSING
1 1/2"	100
NO. 4	50
NO. 200	8

SAND EQUIVALENT = MINIMUM OF 50

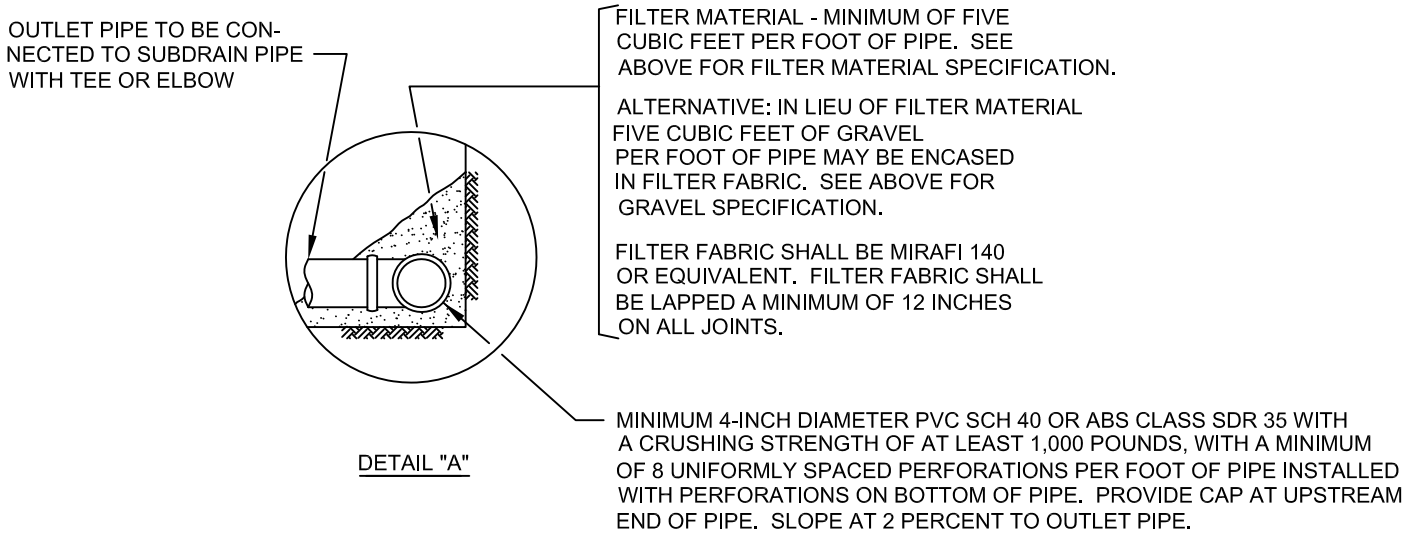

DETAIL "A"

NOTES:
1. TRENCH FOR OUTLET PIPES TO BE BACKFILLED WITH ON-SITE SOIL.

SLOPE FILL SUBDRAINS

GRADING GUIDE SPECIFICATIONS

NOT TO SCALE

DRAWN: JAS
CHKD: GKM

PLATE D-6

SOUTHERN CALIFORNIA GEOTECHNICAL

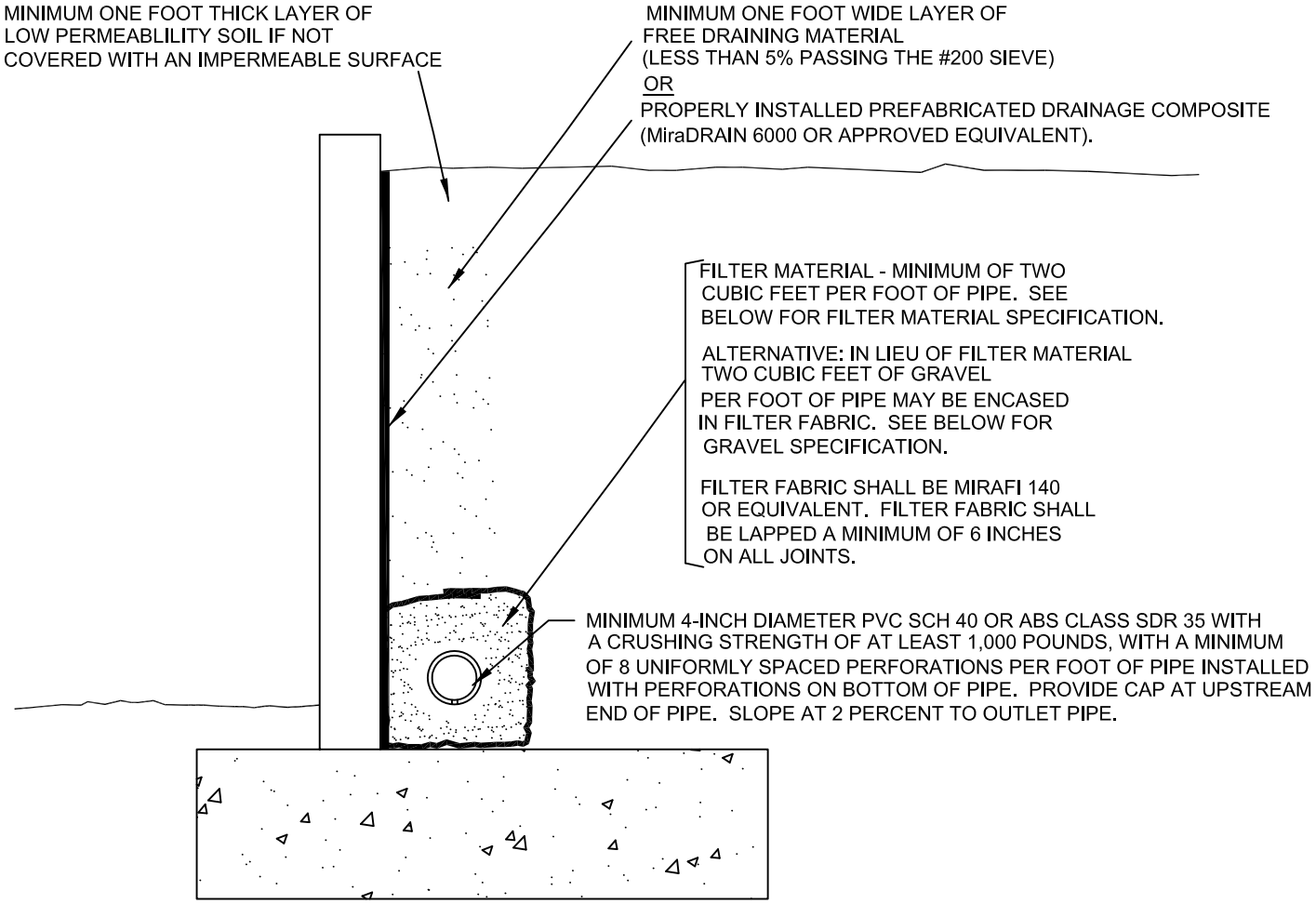

"FILTER MATERIAL" TO MEET FOLLOWING SPECIFICATION OR APPROVED EQUIVALENT: (CONFORMS TO EMA STD. PLAN 323)

SIEVE SIZE	PERCENTAGE PASSING
1"	100
3/4"	90-100
3/8"	40-100
NO. 4	25-40
NO. 8	18-33
NO. 30	5-15
NO. 50	0-7
NO. 200	0-3

"GRAVEL" TO MEET FOLLOWING SPECIFICATION OR APPROVED EQUIVALENT:

SIEVE SIZE	MAXIMUM PERCENTAGE PASSING
1 1/2"	100
NO. 4	50
NO. 200	8

SAND EQUIVALENT = MINIMUM OF 50

RETAINING WALL BACKDRAINS

GRADING GUIDE SPECIFICATIONS

NOT TO SCALE

DRAWN: JAS
CHKD: GKM

PLATE D-7

SOUTHERN CALIFORNIA GEOTECHNICAL

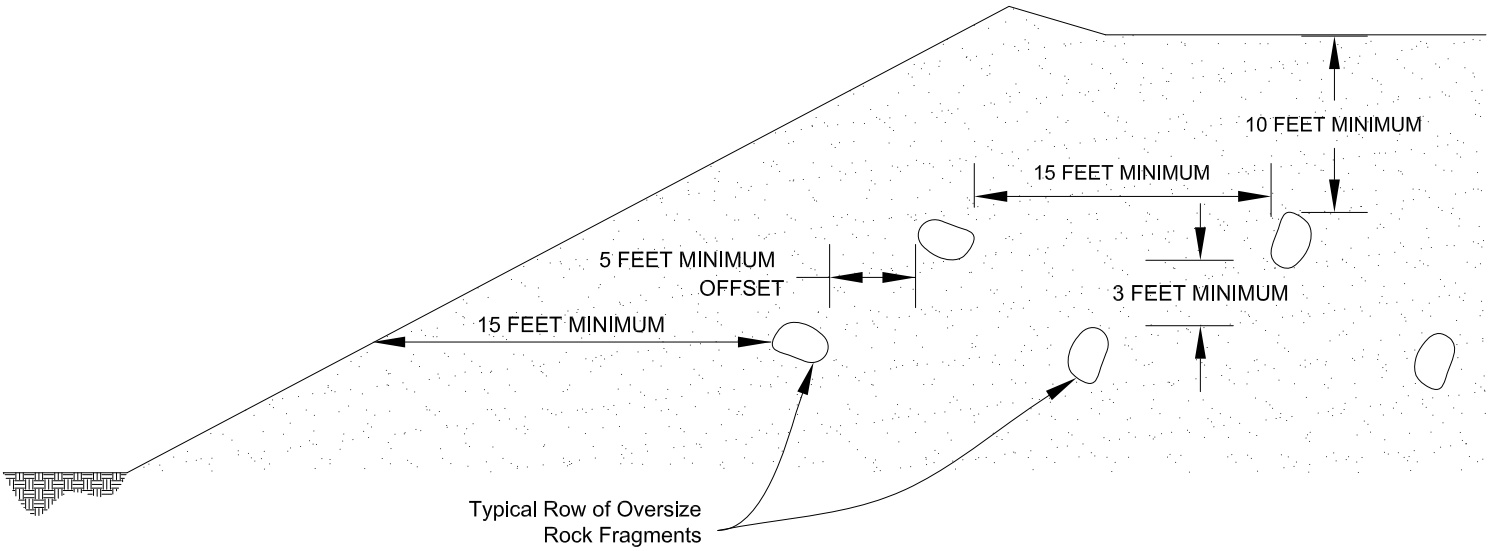

Section View

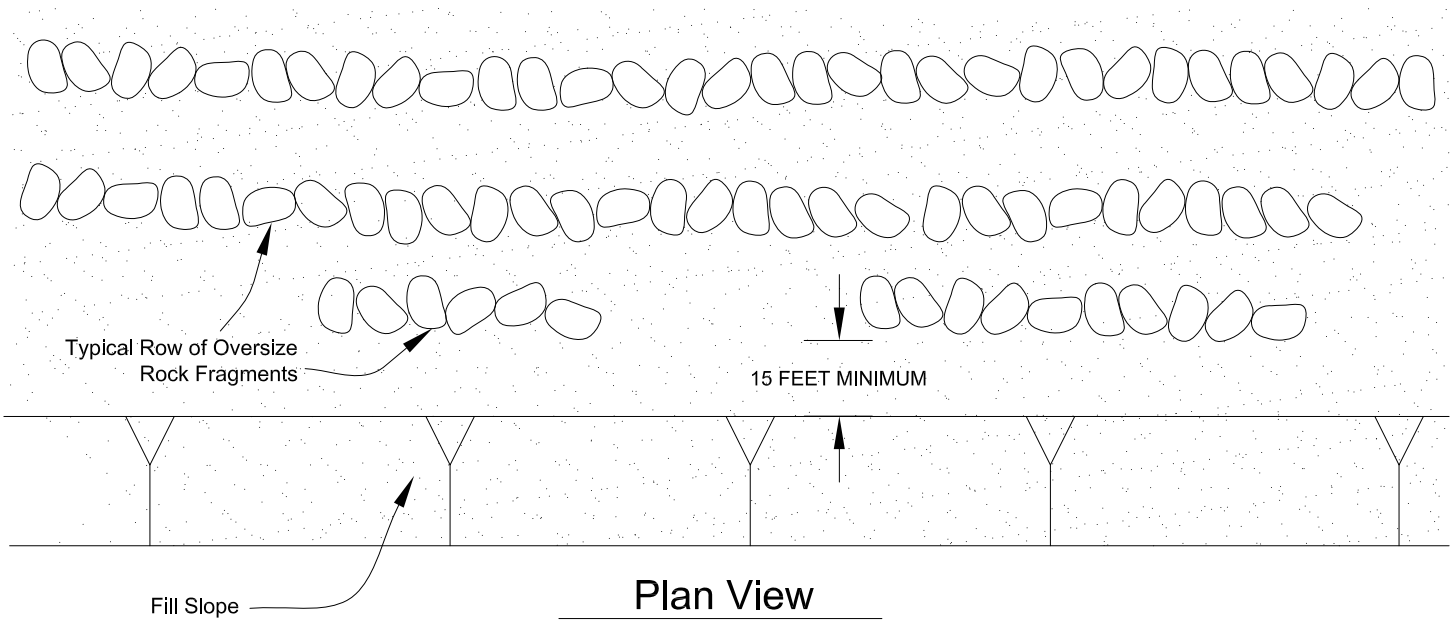

Plan View

PLACEMENT OF OVERSIZED MATERIAL

GRADING GUIDE SPECIFICATIONS

NOT TO SCALE

DRAWN: PM
CHKD: GKM

PLATE D-8

SOUTHERN CALIFORNIA GEOTECHNICAL

APPENDIX E

USGS Design Maps Summary Report

User–Specified Input

Building Code Reference Document	ASCE 7-10 Standard (which utilizes USGS hazard data available in 2008)
Site Coordinates	33.76693°N, 118.10249°W
Site Soil Classification	Site Class D – "Stiff Soil"
Risk Category	I/II/III

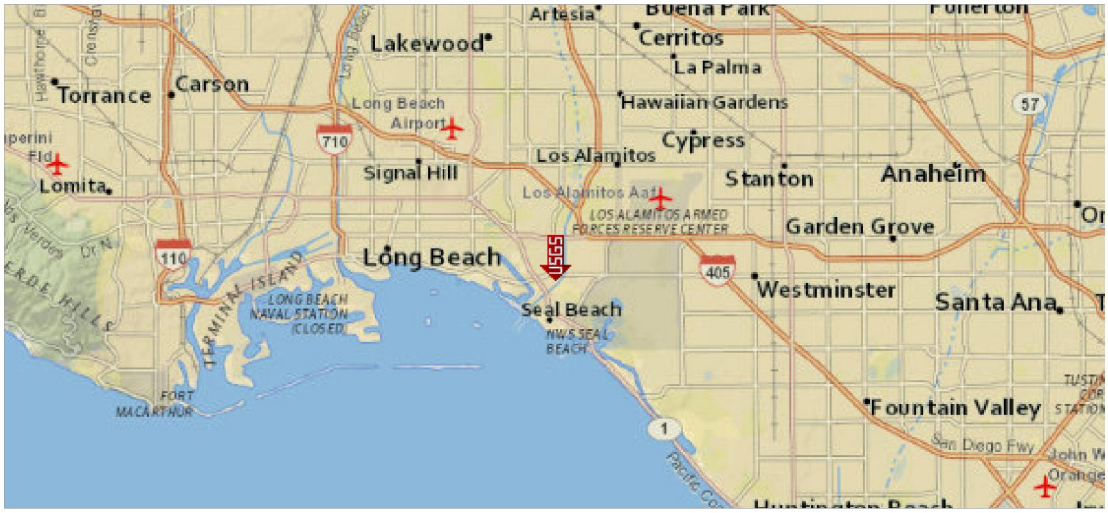

USGS–Provided Output

S_S =	1.562 g	S_{MS} =	1.562 g	S_{DS} =	1.041 g
S_1 =	0.582 g	S_{M1} =	0.873 g	S_{D1} =	0.582 g

For information on how the SS and S1 values above have been calculated from probabilistic (risk-targeted) and deterministic ground motions in the direction of maximum horizontal response, please return to the application and select the "2009 NEHRP" building code reference document.

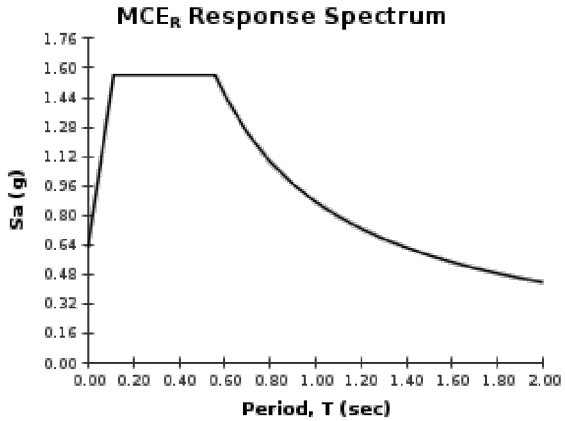

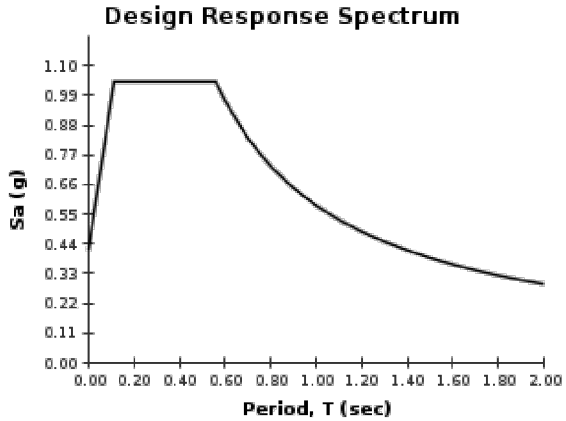

SOURCE: U.S. GEOLOGICAL SURVEY (USGS)
<http://geohazards.usgs.gov/designmaps/us/application.php>

SEISMIC DESIGN PARAMETERS

TWO PROPOSED COMMERCIAL/INDUSTRIAL BUILDINGS

LONG BEACH, CALIFORNIA

DRAWN: JLL
CHKD: JAS

SCG PROJECT
16G136-1

PLATE E-1

SOUTHERN CALIFORNIA GEOTECHNICAL

Section 11.8.3 — Additional Geotechnical Investigation Report Requirements for Seismic Design Categories D through F

From Figure 22-7 [4] PGA = 0.597

Equation (11.8–1): $PGA_M = F_{PGA}PGA = 1.000 \times 0.597 = 0.597$ g

Table 11.8–1: Site Coefficient F_{PGA}

Site Class	Mapped MCE Geometric Mean Peak Ground Acceleration, PGA				
	PGA ≤ 0.10	PGA = 0.20	PGA = 0.30	PGA = 0.40	PGA ≥ 0.50
A	0.8	0.8	0.8	0.8	0.8
B	1.0	1.0	1.0	1.0	1.0
C	1.2	1.2	1.1	1.0	1.0
D	1.6	1.4	1.2	1.1	1.0
E	2.5	1.7	1.2	0.9	0.9
F	See Section 11.4.7 of ASCE 7				

Note: Use straight–line interpolation for intermediate values of PGA

For Site Class = D and PGA = 0.597 g, F_{PGA} = 1.000

Section 21.2.1.1 — Method 1 (from Chapter 21 – Site-Specific Ground Motion Procedures for Seismic Design)

From Figure 22-17 [5] C_{RS} = 0.968

From Figure 22-18 [6] C_{R1} = 0.993

SOURCE: U.S. GEOLOGICAL SURVEY (USGS)
<http://geohazards.usgs.gov/designmaps/us/application.php>

MCE PEAK GROUND ACCELERATION

TWO PROPOSED COMMERCIAL/INDUSTRIAL BUILDINGS

LONG BEACH, CALIFORNIA

DRAWN: JLL
CHKD: JAS

SCG PROJECT
16G136-1

PLATE E-2

SOUTHERN CALIFORNIA GEOTECHNICAL

APPENDIX F

LIQUEFACTION EVALUATION

Project Name	2 C/I Buildings	MCE_G Design Acceleration	0.597	(g)
Project Location	Long Beach, CA	Design Magnitude	7.03	
Project Number	16G136	Historic High Depth to Groundwater	8.0	(ft)
Engineer	JLL	Depth to Groundwater at Time of Drilling	12	(ft)
		Borehole Diameter	6	(in)
Boring No.	B-1			

Sample Depth (ft)	Depth to Top of Layer (ft)	Depth to Bottom of Layer (ft)	Depth to Midpoint (ft)	Uncorrected SPT N-Value	Unit Weight of Soil (pcf)	Fines Content (%)	Energy Correction	C_B	C_S	C_N	Rod Length Correction	$(N_1)_{60}$	$(N_1)_{60CS}$	Overburden Stress (σ_o) (psf)	Eff. Overburden Stress (Hist. Water) (σ_o') (psf)	Eff. Overburden Stress (Curr. Water) (σ_o') (psf)	Stress Reduction Coefficient (r_d)	MSF	Ks	Cyclic Resistance Ratio (M=7.5)	Cyclic Resistance Ratio (M=7.03)	Cyclic Stress Ratio Induced by Design Earthquake	Factor of Safety	Comments
							(1)	(2)	(3)	(4)	(5)	(6)	(7)				(8)	(9)	(10)	(11)	(12)	(13)		
7.5	0	8	4	7	120	83	1.3	1.05	1.14	1.70	0.75	13.9	19.4	480	480	480	1.00	1.08	1.1	0.20	0.24	n/a	n/a	Above Ground Water
9.5	8	10	9	5	120	92	1.3	1.05	1.1	1.40	0.75	7.9	13.4	1080	1018	1080	0.98	1.04	1.08	0.14	0.16	N/A	N/A	Non-Liq: PI>18
11	10	12	11	2	120		1.3	1.05	1.1	1.36	0.75	3.1	3.1	1320	1133	1320	0.97	1.02	1.04	0.08	0.08	N/A	N/A	Non-Liq: PI>18
13.5	12	14.5	13.3	2	120	66	1.3	1.05	1.1	1.21	0.85	3.1	8.7	1590	1262	1512	0.96	1.03	1.04	0.11	0.12	N/A	N/A	Non-Liq: PI>18
16	14.5	17	15.8	1	120		1.3	1.05	1.1	1.18	0.85	1.5	1.5	1890	1406	1656	0.95	1.02	1.03	0.07	0.07	N/A	N/A	Non-Liq: PI>18
18.5	17	19.5	18.3	6	120	73	1.3	1.05	1.1	1.08	0.95	9.3	14.8	2190	1550	1800	0.94	1.05	1.03	0.15	0.17	N/A	N/A	Non-Liq: PI>18
21	19.5	22	20.8	8	120	59	1.3	1.05	1.12	1.04	0.95	12.1	17.7	2490	1694	1944	0.93	1.07	1.03	0.18	0.20	0.53	0.37	**Liquefiable**
23.5	22	24.5	23.3	4	120	23	1.3	1.05	1.1	1.01	0.95	5.7	10.6	2790	1838	2088	0.91	1.03	1.01	0.12	0.13	0.54	0.24	**Liquefiable**
26	24.5	27	25.8	20	120	73	1.3	1.05	1.3	0.98	0.95	33.2	38.7	3090	1982	2232	0.90	1.20	1.02	2.00	2.00	0.55	3.66	Non-Liquefiable
28.5	27	29.5	28.3	15	120		1.3	1.05	1.23	0.95	0.95	22.7	22.7	3390	2126	2376	0.89	1.10	1	0.25	0.27	0.55	0.49	**Liquefiable**
31	29.5	32	30.8	11	120	33	1.3	1.05	1.15	0.93	0.95	15.2	20.7	3690	2270	2520	0.88	1.09	0.99	0.21	0.23	0.55	0.42	**Liquefiable**
33.5	32	34.5	33.3	23	120	3	1.3	1.05	1.3	0.93	1	38.0	38.0	3990	2414	2664	0.86	1.20	0.96	2.00	2.00	0.55	3.62	Non-Liquefiable
36	34.5	38	36.3	33	120		1.3	1.05	1.3	0.94	1	55.0	55.0	4350	2587	2837	0.85	1.20	0.94	2.00	2.00	0.55	3.62	Non-Liquefiable
41	38	43	40.5	36	120		1.3	1.05	1.3	0.93	1	59.4	59.4	4860	2832	3082	0.82	1.20	0.91	2.00	2.00	0.55	3.65	Non-Liquefiable
46	43	48	45.5	35	120		1.3	1.05	1.3	0.91	1	56.4	56.4	5460	3120	3370	0.80	1.20	0.88	2.00	2.00	0.54	3.70	Non-Liquefiable
51	48	51.5	49.8	30	120		1.3	1.05	1.3	0.87	1	46.3	46.3	5970	3365	3614	0.77	1.20	0.86	2.00	2.00	0.53	3.76	Non-Liquefiable

Notes:

(1) Energy Correction for N_{90} of automatic hammer to standard N_{60}

(2) Borehole Diameter Correction (Skempton, 1986)

(3) Correction for split-spoon sampler with room for liners, but liners are absent, (Seed et al., 1984, 2001)

(4) Overburden Correction, Caluclated by Eq. 39 (Boulanger and Idriss, 2008)

(5) Rod Length Correction for Samples <10 m in depth

(6) N-value corrected for energy, borehole diameter, sampler with absent liners, rod length, and overburden

(7) N-value corrected for fines content per Eqs. 75 and 76 (Boulanger and Idriss, 2008)

(8) Stress Reduction Coefficient calculated by Eq. 22 (Boulanger and Idriss, 2008)

(9) Magnitude Scaling Factor calculated by Eqns. A.8 & A.10 (Boulanger and Idriss, 2014)

(10) Overburden Correction Factor calcuated by Eq. 54 (Boulanger and Idriss, 2008)

(11) Calcuated by Eq. 70 (Boulanger and Idriss, 2008)

(12) Calcuated by Eq. 72 (Boulanger and Idriss, 2008)

(13) Calcuated by Eq. 25 (Boulanger and Idriss, 2008)

LIQUEFACTION INDUCED SETTLEMENTS

Project Name	2 C/I Buildings
Project Location	Long Beach, CA
Project Number	16G136
Engineer	JLL

Boring No. B-1

Sample Depth (ft)	Depth to Top of Layer (ft)	Depth to Bottom of Layer (ft)	Depth to Midpoint (ft)	$(N_1)_{60}$	DN for fines content	$(N_1)_{60\text{-}CS}$	Liquefaction Factor of Safety	Limiting Shear Strain γ_{min}	Parameter Fα	Maximum Shear Strain γ_{max}	Height of Layer		Vertical Reconsolidation Strain ε_v		Total Deformation of Layer (in)	Comments
				(1)	(2)	(3)	(4)	(5)	(6)	(7)			(8)			
7.5	0	8	4	13.9	5.5	19.4	n/a	0.17	0.55	0.00	8.00		0.000		0.00	Above Ground Water
9.5	8	10	9	7.9	5.5	13.4	N/A	0.33	0.82	0.00	2.00		0.000		0.00	Non-Liq: PI>18
11	10	12	11	3.1	0.0	3.1	N/A	0.50	0.95	0.00	2.00		0.000		0.00	Non-Liq: PI>18
13.5	12	14.5	13.3	3.1	5.6	8.7	N/A	0.50	0.94	0.00	2.50		0.000		0.00	Non-Liq: PI>18
16	14.5	17	15.8	1.5	0.0	1.5	N/A	0.50	0.95	0.00	2.50		0.000		0.00	Non-Liq: PI>18
18.5	17	19.5	18.3	9.3	5.6	14.8	N/A	0.28	0.76	0.00	2.50		0.000		0.00	Non-Liq: PI>18
21	19.5	22	20.8	12.1	5.6	17.7	0.37	0.21	0.63	0.21	2.50		0.025		0.76	**Liquefiable**
23.5	22	24.5	23.3	5.7	4.9	10.6	0.24	0.44	0.90	0.44	2.50		0.036		1.08	**Liquefiable**
26	24.5	27	25.8	33.2	5.6	38.7	3.66	0.01	-0.71	0.00	2.50		0.000		0.00	Non-Liquefiable
28.5	27	29.5	28.3	22.7	0.0	22.7	0.49	0.12	0.37	0.12	2.50		0.021		0.62	**Liquefiable**
31	29.5	32	30.8	15.2	5.5	20.7	0.42	0.15	0.48	0.15	2.50		0.022		0.67	**Liquefiable**
33.5	32	34.5	33.3	38.0	0.0	38.0	3.62	0.01	-0.65	0.00	2.50		0.000		0.00	Non-Liquefiable
36	34.5	38	36.3	55.0	0.0	55.0	3.62	0.00	-2.00	0.00	3.50		0.000		0.00	Non-Liquefiable
41	38	43	40.5	59.4	0.0	59.4	3.65	0.00	-2.38	0.00	5.00		0.000		0.00	Non-Liquefiable
46	43	48	45.5	56.4	0.0	56.4	3.70	0.00	-2.12	0.00	5.00		0.000		0.00	Non-Liquefiable
51	48	51.5	49.8	46.3	0.0	46.3	3.76	0.00	-1.29	0.00	3.50		0.000		0.00	Non-Liquefiable
											Total Deformation (in)				3.13	

Notes:

(1) $(N_1)_{60}$ calculated previously for the individual layer

(2) Correction for fines content per Equation 76 (Boulanger and Idriss, 2008)

(3) Corrected $(N_1)_{60}$ for fines content

(4) Factor of Safety against Liquefaction, calculated previously for the individual layer

(5) Calcuated by Eq. 86 (Boulanger and Idriss, 2008)

(6) Calcuated by Eq. 89 (Boulanger and Idriss, 2008)

(7) Calcuated by Eqs. 90, 91, and 92 (Boulanger and Idriss, 2008)

(8) Volumetric Strain Induced in a Liquefiable Layer, Calcuated by Eq. 96 (Boulanger and Idriss, 2008)
(Strain N/A if Factor of Safety against Liquefaction > 1.3)

LIQUEFACTION EVALUATION

Project Name	2 C/I Buildings	MCE_G Design Acceleration	0.597	(g)
Project Location	Long Beach, CA	Design Magnitude	7.03	
Project Number	16G136	Historic High Depth to Groundwater	8.0	(ft)
Engineer	JLL	Depth to Groundwater at Time of Drilling	13	(ft)
		Borehole Diameter	6	(in)
Boring No.	B-2			

Sample Depth (ft)	Depth to Top of Layer (ft)	Depth to Bottom of Layer (ft)	Depth to Midpoint (ft)	Uncorrected SPT N-Value	Unit Weight of Soil (pcf)	Fines Content (%)	Energy Correction	C_B	C_S	C_N	Rod Length Correction	$(N_1)_{60}$	$(N_1)_{60CS}$	Overburden Stress (σ_o) (psf)	Eff. Overburden Stress (Hist. Water) (σ_o') (psf)	Eff. Overburden Stress (Curr. Water) (σ_o') (psf)	Stress Reduction Coefficient (r_d)	MSF	Ks	Cyclic Resistance Ratio (M=7.5)	Cyclic Resistance Ratio (M=7.03)	Cyclic Stress Ratio Induced by Design Earthquake	Factor of Safety	Comments
							(1)	(2)	(3)	(4)	(5)	(6)	(7)				(8)	(9)	(10)	(11)	(12)	(13)		
8.5	7	9.5	8.25	8	120		1.3	1.05	1.16	1.70	0.75	16.2	16.2	150	134	150	0.98	1.06	1.1	0.17	0.19	N/A	N/A	Non-Liq: PI>18
11	9.5	12	10.8	9	120	38	1.3	1.05	1.19	1.70	0.75	18.6	24.1	450	278	450	0.97	1.11	1.1	0.27	0.33	0.61	0.54	**Liquefiable**
13.5	12	14.5	13.3	17	120	6	1.3	1.05	1.3	1.41	0.85	36.1	36.1	750	422	734	0.96	1.20	1.1	1.41	1.86	0.66	2.81	Non-Liquefiable
16	14.5	17.5	16	20	120	6	1.3	1.05	1.3	1.30	0.85	39.2	39.2	1080	581	893	0.95	1.20	1.1	2.00	2.00	0.69	2.92	Non-Liquefiable
19.5	17.5	22	19.8	21	120	6	1.3	1.05	1.3	1.20	0.95	42.5	42.5	1530	797	1109	0.93	1.20	1.1	2.00	2.00	0.69	2.88	Non-Liquefiable
24	22	24.5	23.3	14	120	8	1.3	1.05	1.28	1.20	0.95	27.8	28.2	1950	998	1310	0.91	1.15	1.1	0.39	0.49	0.69	0.71	**Liquefiable**
25	24.5	27	25.8	21	120	92	1.3	1.05	1.3	1.11	0.95	39.2	44.7	2250	1142	1454	0.90	1.20	1.1	2.00	2.00	0.69	2.90	Non-Liquefiable
29.5	27	32	29.5	27	120	96	1.3	1.05	1.3	1.05	0.95	48.0	53.5	2700	1358	1670	0.88	1.20	1.1	2.00	2.00	0.68	2.94	Non-Liquefiable
34.5	32	37	34.5	20	120		1.3	1.05	1.3	1.03	1	36.4	36.4	3300	1646	1958	0.86	1.20	1.07	1.51	1.93	0.67	2.90	Non-Liquefiable
39.5	37	42	39.5	28	120	91	1.3	1.05	1.3	0.99	1	49.0	54.6	3900	1934	2246	0.83	1.20	1.02	2.00	2.00	0.65	3.09	Non-Liquefiable
44.5	42	47	44.5	67	120		1.3	1.05	1.3	1.01	1	120.1	120.1	4500	2222	2534	0.80	1.20	0.98	2.00	2.00	0.63	3.18	Non-Liquefiable
49.5	47	50	48.5	70	120		1.3	1.05	1.3	1.02	1	126.9	126.9	4980	2453	2765	0.78	1.20	0.95	2.00	2.00	0.61	3.26	Non-Liquefiable

Notes:

(1) Energy Correction for N_{90} of automatic hammer to standard N_{60}

(2) Borehole Diameter Correction (Skempton, 1986)

(3) Correction for split-spoon sampler with room for liners, but liners are absent, (Seed et al., 1984, 2001)

(4) Overburden Correction, Caluclated by Eq. 39 (Boulanger and Idriss, 2008)

(5) Rod Length Correction for Samples <10 m in depth

(6) N-value corrected for energy, borehole diameter, sampler with absent liners, rod length, and overburden

(7) N-value corrected for fines content per Eqs. 75 and 76 (Boulanger and Idriss, 2008)

(8) Stress Reduction Coefficient calculated by Eq. 22 (Boulanger and Idriss, 2008)

(9) Magnitude Scaling Factor calculated by Eqns. A.8 & A.10 (Boulanger and Idriss, 2014)

(10) Overburden Correction Factor calcuated by Eq. 54 (Boulanger and Idriss, 2008)

(11) Calcuated by Eq. 70 (Boulanger and Idriss, 2008)

(12) Calcuated by Eq. 72 (Boulanger and Idriss, 2008)

(13) Calcuated by Eq. 25 (Boulanger and Idriss, 2008)

LIQUEFACTION INDUCED SETTLEMENTS

Project Name	2 C/I Buildings
Project Location	Long Beach, CA
Project Number	16G136
Engineer	JLL

Boring No. B-2

Sample Depth (ft)	Depth to Top of Layer (ft)	Depth to Bottom of Layer (ft)	Depth to Midpoint (ft)	$(N_1)_{60}$	DN for fines content	$(N_1)_{60\text{-}CS}$	Liquefaction Factor of Safety	Limiting Shear Strain γ_{min}	Parameter Fα	Maximum Shear Strain γ_{max}	Height of Layer		Vertical Reconsolidation Strain ε_v		Total Deformation of Layer (in)	Comments
				(1)	(2)	(3)	(4)	(5)	(6)	(7)			(8)			
8.5	7	9.5	8.25	16.2	0.0	16.2	N/A	0.24	0.70	0.00	2.50		0.000		0.00	Non-Liq: PI>18
11	9.5	12	10.8	18.6	5.6	24.1	0.54	0.10	0.28	0.10	2.50		0.020		0.59	**Liquefiable**
13.5	12	14.5	13.3	36.1	0.0	36.1	2.81	0.02	-0.52	0.00	2.50		0.000		0.00	Non-Liquefiable
16	14.5	17.5	16	39.2	0.0	39.2	2.92	0.01	-0.74	0.00	3.00		0.000		0.00	Non-Liquefiable
18.5	17.5	22	19.8	42.5	0.0	42.5	2.88	0.00	-1.00	0.00	4.50		0.000		0.00	Non-Liquefiable
24	22	24.5	23.3	27.8	0.4	28.2	0.71	0.06	0.03	0.06	2.50		0.013		0.38	**Liquefiable**
25	24.5	27	25.8	39.2	5.5	44.7	2.90	0.00	-1.17	0.00	2.50		0.000		0.00	Non-Liquefiable
29.5	27	32	29.5	48.0	5.5	53.5	2.94	0.00	-1.87	0.00	5.00		0.000		0.00	Non-Liquefiable
34.5	32	37	34.5	36.4	0.0	36.4	2.90	0.02	-0.54	0.00	5.00		0.000		0.00	Non-Liquefiable
39.5	37	42	39.5	49.0	5.5	54.6	3.09	0.00	-1.96	0.00	5.00		0.000		0.00	Non-Liquefiable
44.5	42	47	44.5	120.1	0.0	120.1	3.18	0.00	-8.02	0.00	5.00		0.000		0.00	Non-Liquefiable
49.5	47	50	48.5	126.9	0.0	126.9	3.26	0.00	-8.70	0.00	3.00		0.000		0.00	Non-Liquefiable
											Total Deformation (in)				0.97	

Notes:

(1) $(N_1)_{60}$ calculated previously for the individual layer

(2) Correction for fines content per Equation 76 (Boulanger and Idriss, 2008)

(3) Corrected $(N_1)_{60}$ for fines content

(4) Factor of Safety against Liquefaction, calculated previously for the individual layer

(5) Calcuated by Eq. 86 (Boulanger and Idriss, 2008)

(6) Calcuated by Eq. 89 (Boulanger and Idriss, 2008)

(7) Calcuated by Eqs. 90, 91, and 92 (Boulanger and Idriss, 2008)

(8) Volumetric Strain Induced in a Liquefiable Layer, Calcuated by Eq. 96 (Boulanger and Idriss, 2008)
(Strain N/A if Factor of Safety against Liquefaction > 1.3)

LIQUEFACTION EVALUATION

Project Name	2 C/I Buildings	MCE_G Design Acceleration	0.597	(g)
Project Location	Long Beach, CA	Design Magnitude	7.03	
Project Number	16G136	Historic High Depth to Groundwater	8.0	(ft)
Engineer	JLL	Depth to Groundwater at Time of Drilling	8	(ft)
		Borehole Diameter	6	(in)
Boring No.	B-3			

Sample Depth (ft)	Depth to Top of Layer (ft)	Depth to Bottom of Layer (ft)	Depth to Midpoint (ft)	Uncorrected SPT N-Value	Unit Weight of Soil (pcf)	Fines Content (%)	Energy Correction	C_B	C_S	C_N	Rod Length Correction	$(N_1)_{60}$	$(N_1)_{60CS}$	Overburden Stress (σ_o) (psf)	Eff. Overburden Stress (Hist. Water) (σ_o') (psf)	Eff. Overburden Stress (Curr. Water) (σ_o') (psf)	Stress Reduction Coefficient (r_d)	MSF	Ks	Cyclic Resistance Ratio (M=7.5)	Cyclic Resistance Ratio (M=7.03)	Cyclic Stress Ratio Induced by Design Earthquake	Factor of Safety	Comments
							(1)	(2)	(3)	(4)	(5)	(6)	(7)				(8)	(9)	(10)	(11)	(12)	(13)		
8.5	8	9.5	8.75	10	120		1.3	1.05	1.21	1.70	0.75	21.1	21.1	90	43	43	0.98	1.09	1.1	0.22	0.26	0.79	0.33	**Liquefiable**
11	9.5	12	10.8	7	120	27	1.3	1.05	1.14	1.70	0.75	13.9	19.1	330	158	158	0.97	1.08	1.1	0.20	0.23	0.79	0.29	**Liquefiable**
13.5	12	14.5	13.3	20	120	7	1.3	1.05	1.3	1.62	0.85	48.8	48.9	630	302	302	0.96	1.20	1.1	2.00	2.00	0.78	2.57	Non-Liquefiable
16	14.5	17.5	16	28	120		1.3	1.05	1.3	1.36	0.85	57.5	57.5	960	461	461	0.95	1.20	1.1	2.00	2.00	0.77	2.61	Non-Liquefiable
19.5	17.5	22	19.8	31	120		1.3	1.05	1.3	1.22	0.95	63.6	63.6	1410	677	677	0.93	1.20	1.1	2.00	2.00	0.75	2.65	Non-Liquefiable
24.5	22	27	24.5	21	120		1.3	1.05	1.3	1.25	0.95	44.1	44.1	1980	950	950	0.91	1.20	1.1	2.00	2.00	0.73	2.72	Non-Liquefiable
29.5	27	32	29.5	17	120	97	1.3	1.05	1.3	1.18	0.95	33.7	39.2	2580	1238	1238	0.88	1.20	1.1	2.00	2.00	0.71	2.80	Non-Liquefiable
33.5	32	34	33	32	120		1.3	1.05	1.3	1.07	1	61.0	61.0	3000	1440	1440	0.86	1.20	1.1	2.00	2.00	0.70	2.86	Non-Liquefiable
34.5	34	37	35.5	32	120		1.3	1.05	1.3	1.06	1	60.0	60.0	3300	1584	1584	0.85	1.20	1.08	2.00	2.00	0.69	2.91	Non-Liquefiable
39.5	37	42	39.5	31	120		1.3	1.05	1.3	1.03	1	56.8	56.8	3780	1814	1814	0.83	1.20	1.04	2.00	2.00	0.67	2.99	Non-Liquefiable
44.5	42	47	44.5	48	120		1.3	1.05	1.3	1.00	1	85.2	85.2	4380	2102	2102	0.80	1.20	1	2.00	2.00	0.65	3.09	Non-Liquefiable
49.5	47	50	48.5	50	120		1.3	1.05	1.3	0.99	1	88.2	88.2	4860	2333	2333	0.78	1.20	0.97	2.00	2.00	0.63	3.18	Non-Liquefiable

Notes:

(1) Energy Correction for N_{90} of automatic hammer to standard N_{60}

(2) Borehole Diameter Correction (Skempton, 1986)

(3) Correction for split-spoon sampler with room for liners, but liners are absent, (Seed et al., 1984, 2001)

(4) Overburden Correction, Caluclated by Eq. 39 (Boulanger and Idriss, 2008)

(5) Rod Length Correction for Samples <10 m in depth

(6) N-value corrected for energy, borehole diameter, sampler with absent liners, rod length, and overburden

(7) N-value corrected for fines content per Eqs. 75 and 76 (Boulanger and Idriss, 2008)

(8) Stress Reduction Coefficient calculated by Eq. 22 (Boulanger and Idriss, 2008)

(9) Magnitude Scaling Factor calculated by Eqns. A.8 & A.10 (Boulanger and Idriss, 2014)

(10) Overburden Correction Factor calcuated by Eq. 54 (Boulanger and Idriss, 2008)

(11) Calcuated by Eq. 70 (Boulanger and Idriss, 2008)

(12) Calcuated by Eq. 72 (Boulanger and Idriss, 2008)

(13) Calcuated by Eq. 25 (Boulanger and Idriss, 2008)

LIQUEFACTION INDUCED SETTLEMENTS

Project Name	2 C/I Buildings
Project Location	Long Beach, CA
Project Number	16G136
Engineer	JLL

Boring No. B-3

Sample Depth (ft)	Depth to Top of Layer (ft)	Depth to Bottom of Layer (ft)	Depth to Midpoint (ft)	$(N_1)_{60}$	DN for fines content	$(N_1)_{60\text{-}CS}$	Liquefaction Factor of Safety	Limiting Shear Strain γ_{min}	Parameter Fα	Maximum Shear Strain γ_{max}	Height of Layer		Vertical Reconsolidation Strain ε_v		Total Deformation of Layer (in)	Comments
				(1)	(2)	(3)	(4)	(5)	(6)	(7)			(8)			
8.5	8	9.5	8.75	21.1	0.0	21.1	0.33	0.14	0.46	0.14	1.50		0.022		0.40	**Liquefiable**
11	9.5	12	10.8	13.9	5.2	19.1	0.29	0.18	0.57	0.18	2.50		0.024		0.72	**Liquefiable**
13.5	12	14.5	13.3	48.8	0.1	48.9	2.57	0.00	-1.50	0.00	2.50		0.000		0.00	Non-Liquefiable
16	14.5	17.5	16	57.5	0.0	57.5	2.61	0.00	-2.21	0.00	3.00		0.000		0.00	Non-Liquefiable
19.5	17.5	22	19.8	63.6	0.0	63.6	2.65	0.00	-2.73	0.00	4.50		0.000		0.00	Non-Liquefiable
24.5	22	27	24.5	44.1	0.0	44.1	2.72	0.00	-1.12	0.00	5.00		0.000		0.00	Non-Liquefiable
29.5	27	31	29.5	33.7	5.5	39.2	2.80	0.01	-0.74	0.00	4.00		0.000		0.00	Non-Liquefiable
33.5	31	34	33	61.0	0.0	61.0	2.86	0.00	-2.51	0.00	3.00		0.000		0.00	Non-Liquefiable
34.5	34	37	35.5	60.0	0.0	60.0	2.91	0.00	-2.42	0.00	3.00		0.000		0.00	Non-Liquefiable
39.5	37	42	39.5	56.8	0.0	56.8	2.99	0.00	-2.15	0.00	5.00		0.000		0.00	Non-Liquefiable
44.5	42	47	44.5	85.2	0.0	85.2	3.09	0.00	-4.68	0.00	5.00		0.000		0.00	Non-Liquefiable
49.5	47	50	48.5	88.2	0.0	88.2	3.18	0.00	-4.95	0.00	3.00		0.000		0.00	Non-Liquefiable
											Total Deformation (in)				1.12	

Notes:

(1) $(N_1)_{60}$ calculated previously for the individual layer

(2) Correction for fines content per Equation 76 (Boulanger and Idriss, 2008)

(3) Corrected $(N_1)_{60}$ for fines content

(4) Factor of Safety against Liquefaction, calculated previously for the individual layer

(5) Calcuated by Eq. 86 (Boulanger and Idriss, 2008)

(6) Calcuated by Eq. 89 (Boulanger and Idriss, 2008)

(7) Calcuated by Eqs. 90, 91, and 92 (Boulanger and Idriss, 2008)

(8) Volumetric Strain Induced in a Liquefiable Layer, Calcuated by Eq. 96 (Boulanger and Idriss, 2008)
(Strain N/A if Factor of Safety against Liquefaction > 1.3)

LIQUEFACTION EVALUATION

Project Name	2 C/I Buildings	MCE_G Design Acceleration	0.597	(g)
Project Location	Long Beach, CA	Design Magnitude	7.03	
Project Number	16G136	Historic High Depth to Groundwater	8.0	(ft)
Engineer	JLL	Depth to Groundwater at Time of Drilling	10	(ft)
		Borehole Diameter	6	(in)
Boring No.	B-4			

Sample Depth (ft)	Depth to Top of Layer (ft)	Depth to Bottom of Layer (ft)	Depth to Midpoint (ft)	Uncorrected SPT N-Value	Unit Weight of Soil (pcf)	Fines Content (%)	Energy Correction	C_B	C_S	C_N	Rod Length Correction	$(N_1)_{60}$	$(N_1)_{60CS}$	Overburden Stress (σ_o) (psf)	Eff. Overburden Stress (Hist. Water) (σ_o') (psf)	Eff. Overburden Stress (Curr. Water) (σ_o') (psf)	Stress Reduction Coefficient (r_d)	MSF	Ks	Cyclic Resistance Ratio (M=7.5)	Cyclic Resistance Ratio (M=7.03)	Cyclic Stress Ratio Induced by Design Earthquake	Factor of Safety	Comments
							(1)	(2)	(3)	(4)	(5)	(6)	(7)				(8)	(9)	(10)	(11)	(12)	(13)		
7.5	0	8	4	6	120		1.3	1.05	1.12	1.70	0.75	11.7	11.7	480	480	480	1.00	1.04	1.1	0.13	0.15	N/A	N/A	Above Ground Water
9.5	8	10	9	4	120	87	1.3	1.05	1.1	1.42	0.75	6.4	11.9	1080	1018	1080	0.98	1.04	1.07	0.13	0.15	N/A	N/A	Non-Liq: PI>18
11	10	12	11	6	120	66	1.3	1.05	1.1	1.29	0.75	8.7	14.3	1320	1133	1258	0.97	1.05	1.07	0.15	0.17	0.44	0.38	**Liquefiable**
13.5	12	14.5	13.3	10	120	40	1.3	1.05	1.16	1.20	0.85	16.1	21.7	1590	1262	1387	0.96	1.09	1.07	0.23	0.27	0.47	0.57	**Liquefiable**
16	14.5	17	15.8	13	120	41	1.3	1.05	1.21	1.13	0.85	20.6	26.2	1890	1406	1531	0.95	1.13	1.07	0.32	0.39	0.50	0.79	**Liquefiable**
18.5	17	19.5	18.3	9	120	37	1.3	1.05	1.15	1.11	0.95	14.8	20.4	2190	1550	1675	0.94	1.08	1.04	0.21	0.24	0.51	0.46	**Liquefiable**
21	19.5	22	20.8	15	120	31	1.3	1.05	1.26	1.06	0.95	25.8	31.2	2490	1694	1819	0.93	1.18	1.05	0.57	0.71	0.53	1.33	Non-Liquefiable
23.5	22	24.5	23.3	22	120		1.3	1.05	1.3	1.02	0.95	38.0	38.0	2790	1838	1963	0.91	1.20	1.04	2.00	2.00	0.54	3.71	Non-Liquefiable
26	24.5	27.5	26	20	120	21	1.3	1.05	1.3	1.00	0.95	33.7	38.3	3120	1997	2122	0.90	1.20	1.01	2.00	2.00	0.55	3.66	Non-Liquefiable
29.5	27.5	32	29.8	28	120		1.3	1.05	1.3	0.97	0.95	46.0	46.0	3570	2213	2338	0.88	1.20	0.98	2.00	2.00	0.55	3.62	Non-Liquefiable
34.5	32	37	34.5	20	120	98	1.3	1.05	1.3	0.94	1	33.3	38.8	4140	2486	2611	0.86	1.20	0.95	2.00	2.00	0.55	3.62	Non-Liquefiable
39	37	39.5	38.3	21	120		1.3	1.05	1.3	0.91	1	33.8	33.8	4590	2702	2827	0.84	1.20	0.94	0.87	0.98	0.55	1.79	Non-Liquefiable
40	39.5	42	40.8	47	120		1.3	1.05	1.3	0.97	1	80.8	80.8	4890	2846	2971	0.82	1.20	0.91	2.00	2.00	0.55	3.65	Non-Liquefiable
44.5	42	47	44.5	50	120		1.3	1.05	1.3	0.97	1	86.2	86.2	5340	3062	3187	0.80	1.20	0.89	2.00	2.00	0.54	3.69	Non-Liquefiable
49.5	47	50	48.5	68	120		1.3	1.05	1.3	1.04	1	125.1	125.1	5820	3293	3418	0.78	1.20	0.87	2.00	2.00	0.53	3.74	Non-Liquefiable

Notes:

(1) Energy Correction for N_{90} of automatic hammer to standard N_{60}

(2) Borehole Diameter Correction (Skempton, 1986)

(3) Correction for split-spoon sampler with room for liners, but liners are absent, (Seed et al., 1984, 2001)

(4) Overburden Correction, Caluclated by Eq. 39 (Boulanger and Idriss, 2008)

(5) Rod Length Correction for Samples <10 m in depth

(6) N-value corrected for energy, borehole diameter, sampler with absent liners, rod length, and overburden

(7) N-value corrected for fines content per Eqs. 75 and 76 (Boulanger and Idriss, 2008)

(8) Stress Reduction Coefficient calculated by Eq. 22 (Boulanger and Idriss, 2008)

(9) Magnitude Scaling Factor calculated by Eqns. A.8 & A.10 (Boulanger and Idriss, 2014)

(10) Overburden Correction Factor calcuated by Eq. 54 (Boulanger and Idriss, 2008)

(11) Calcuated by Eq. 70 (Boulanger and Idriss, 2008)

(12) Calcuated by Eq. 72 (Boulanger and Idriss, 2008)

(13) Calcuated by Eq. 25 (Boulanger and Idriss, 2008)

LIQUEFACTION INDUCED SETTLEMENTS

Project Name	2 C/I Buildings
Project Location	Long Beach, CA
Project Number	16G136
Engineer	JLL

Boring No. B-4

Sample Depth (ft)	Depth to Top of Layer (ft)	Depth to Bottom of Layer (ft)	Depth to Midpoint (ft)	$(N_1)_{60}$	DN for fines content	$(N_1)_{60\text{-}CS}$	Liquefaction Factor of Safety	Limiting Shear Strain γ_{min}	Parameter Fα	Maximum Shear Strain γ_{max}	Height of Layer		Vertical Reconsolidation Strain ε_v		Total Deformation of Layer (in)	Comments
				(1)	(2)	(3)	(4)	(5)	(6)	(7)			(8)			
7.5	0	8	4	11.7	0.0	11.7	N/A	0.39	0.87	0.00	8.00		0.000		0.00	Above Ground Water
9.5	8	10	9	6.4	5.5	11.9	N/A	0.38	0.86	0.00	2.00		0.000		0.00	Non-Liq: PI>18
11	10	12	11	8.7	5.6	14.3	0.38	0.30	0.78	0.30	2.00		0.030		0.71	**Liquefiable**
13.5	12	14.5	13.3	16.1	5.6	21.7	0.57	0.13	0.42	0.13	2.50		0.022		0.65	**Liquefiable**
16	14.5	17	15.8	20.6	5.6	26.2	0.79	0.08	0.16	0.06	2.50		0.013		0.39	**Liquefiable**
18.5	17	19.5	18.3	14.8	5.5	20.4	0.46	0.15	0.50	0.15	2.50		0.023		0.68	**Liquefiable**
21	19.5	22	20.8	25.8	5.4	31.2	1.33	0.04	-0.17	0.02	2.50		0.000		0.00	Non-Liquefiable
23.5	22	24.5	23.3	38.0	0.0	38.0	3.71	0.01	-0.65	0.00	2.50		0.000		0.00	Non-Liquefiable
26	24.5	27.5	26	33.7	4.6	38.3	3.66	0.01	-0.68	0.00	3.00		0.000		0.00	Non-Liquefiable
29.5	27.5	32	29.8	46.0	0.0	46.0	3.62	0.00	-1.27	0.00	4.50		0.000		0.00	Non-Liquefiable
34.5	32	37	34.5	33.3	5.5	38.8	3.62	0.01	-0.71	0.00	5.00		0.000		0.00	Non-Liquefiable
39	37	39.5	38.3	33.8	0.0	33.8	1.79	0.03	-0.35	0.00	2.50		0.000		0.00	Non-Liquefiable
40	39.5	42	40.8	80.8	0.0	80.8	3.65	0.00	-4.27	0.00	2.50		0.000		0.00	Non-Liquefiable
44.5	42	47	44.5	86.2	0.0	86.2	3.69	0.00	-4.77	0.00	5.00		0.000		0.00	Non-Liquefiable
49.5	47	50	48.5	125.1	0.0	125.1	3.74	0.00	-8.51	0.00	3.00		0.000		0.00	Non-Liquefiable
											Total Deformation (in)				2.43	

Notes:

(1) $(N_1)_{60}$ calculated previously for the individual layer

(2) Correction for fines content per Equation 76 (Boulanger and Idriss, 2008)

(3) Corrected $(N_1)_{60}$ for fines content

(4) Factor of Safety against Liquefaction, calculated previously for the individual layer

(5) Calcuated by Eq. 86 (Boulanger and Idriss, 2008)

(6) Calcuated by Eq. 89 (Boulanger and Idriss, 2008)

(7) Calcuated by Eqs. 90, 91, and 92 (Boulanger and Idriss, 2008)

(8) Volumetric Strain Induced in a Liquefiable Layer, Calcuated by Eq. 96 (Boulanger and Idriss, 2008)
(Strain N/A if Factor of Safety against Liquefaction > 1.3)

APPENDIX G

SUMMARY

OF

CONE PENETRATION TEST DATA

Project:

2-CI Buildings
400 N. Studebaker Road
Long Beach, CA
April 4, 2016

Prepared for:

Mr. Daryl Kas
Southern California Geotechnical, Inc.
22885 E. Savi Ranch Parkway, Ste E
Yorba Linda, CA 92887
Office (714) 685-1115 / Fax (714) 685-1118

Prepared by:

KEHOE TESTING & ENGINEERING
5415 Industrial Drive
Huntington Beach, CA 92649-1518
Office (714) 901-7270 / Fax (714) 901-7289
www.kehoetesting.com

TABLE OF CONTENTS

1. **INTRODUCTION**

2. **SUMMARY OF FIELD WORK**

3. **FIELD EQUIPMENT & PROCEDURES**

4. **CONE PENETRATION TEST DATA & INTERPRETATION**

APPENDIX

- CPT Plots
- CPT Classification/Soil Behavior Chart
- Interpretation Output (CPeT-IT)
- CPeT-IT Calculation Formulas

SUMMARY
OF
CONE PENETRATION TEST DATA

1. INTRODUCTION

This report presents the results of a Cone Penetration Test (CPT) program carried out for the 2-CI Buildings project located at 400 N. Studebaker Road in Long Beach, California. The work was performed by Kehoe Testing & Engineering (KTE) on April 4, 2016. The scope of work was performed as directed by Southern California Geotechnical, Inc. personnel.

2. SUMMARY OF FIELD WORK

The fieldwork consisted of performing CPT soundings at four locations to determine the soil lithology. Groundwater measurements and hole collapse depths provided in **TABLE 2.1** are for information only. The readings indicate the apparent depth to which the hole is open and the apparent water level (if encountered) in the CPT probe hole at the time of measurement upon completion of the CPT. KTE does not warranty the accuracy of the measurements and the reported water levels may not represent the true or stabilized groundwater levels.

LOCATION	DEPTH OF CPT (ft)	COMMENTS/NOTES:
CPT-1	50	Hole open to 6.0 ft (dry)
CPT-2	50	Hole open to 7.0 ft (dry)
CPT-3	50	Groundwater @ 8.5 ft
CPT-4	50	Groundwater @ 4.0 ft

TABLE 2.1 - Summary of CPT Soundings

3. FIELD EQUIPMENT & PROCEDURES

The CPT soundings were carried out by **KTE** using an integrated electronic cone system manufactured by Vertek. The CPT soundings were performed in accordance with ASTM standards (D5778). The cone penetrometers were pushed using a 30-ton CPT rig. The cone used during the program was a 15 cm^2 cone and recorded the following parameters at approximately 2.5 cm depth intervals:

- Cone Resistance (qc)
- Sleeve Friction (fs)
- Dynamic Pore Pressure (u)
- Inclination
- Penetration Speed

The above parameters were recorded and viewed in real time using a laptop computer. Data is stored at the KTE office for future analysis and reference. A complete set of baseline readings

was taken prior to each sounding to determine temperature shifts and any zero load offsets. Monitoring base line readings ensures that the cone electronics are operating properly.

4. CONE PENETRATION TEST DATA & INTERPRETATION

The Cone Penetration Test data is presented in graphical form in the attached Appendix. These plots were generated using the CPeT-IT program. Penetration depths are referenced to ground surface. The soil classification on the CPT plots is derived from the attached CPT Classification Chart (Robertson) and presents major soil lithologic changes. The stratigraphic interpretation is based on relationships between cone resistance (qc), sleeve friction (fs), and penetration pore pressure (u). The friction ratio (Rf), which is sleeve friction divided by cone resistance, is a calculated parameter that is used along with cone resistance to infer soil behavior type. Generally, cohesive soils (clays) have high friction ratios, low cone resistance and generate excess pore water pressures. Cohesionless soils (sands) have lower friction ratios, high cone bearing and generate little (or negative) excess pore water pressures.

Tables of basic CPT output from the interpretation program CPeT-IT are provided for CPT data averaged over one foot intervals in the Appendix. Spreadsheet files of the averaged basic CPT output and averaged estimated geotechnical parameters are also included for use in further geotechnical analysis. We recommend a geotechnical engineer review the assumed input parameters and the calculated output from the CPeT-IT program. A summary of the equations used for the tabulated parameters is provided in the Appendix.

It should be noted that it is not always possible to clearly identify a soil type based on qc, fs and u. In these situations, experience, judgement and an assessment of the pore pressure data should be used to infer the soil behavior type.

If you have any questions regarding this information, please do not hesitate to call our office at (714) 901-7270.

Sincerely,

KEHOE TESTING & ENGINEERING

Richard W. Koester, Jr.
General Manager

04/06/16-kk-7094

APPENDIX

Kehoe Testing and Engineering
714-901-7270
rich@kehoetesting.com
www.kehoetesting.com

CPT: CPT-1
Total depth: 50.14 ft, Date: 4/4/2016
Cone Type: Vertek

Project: **Southern California Geotechnical, Inc./2-CI Buildings**
Location: **400 N. Studebaker Rd Long Beach, CA**

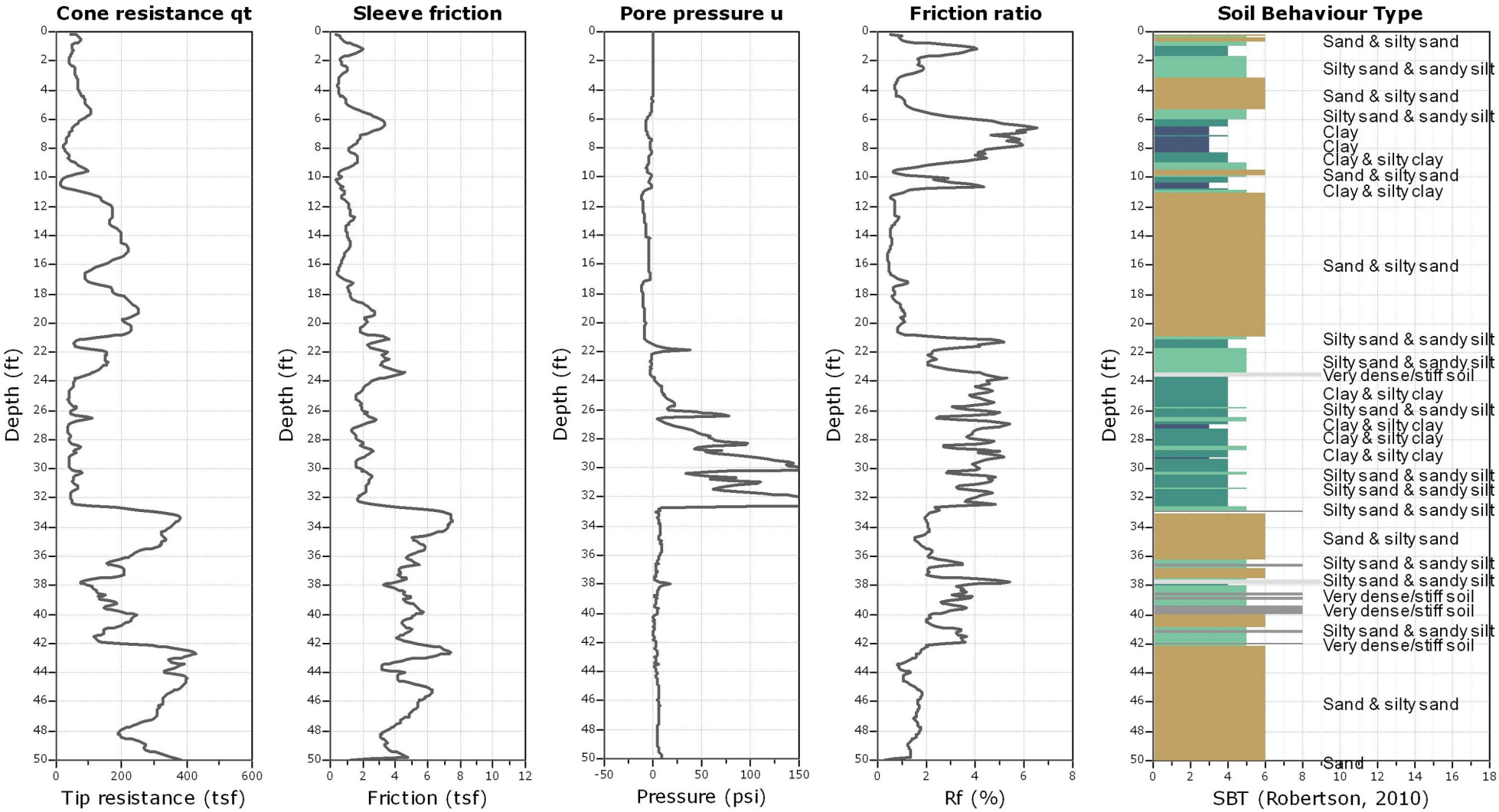

Kehoe Testing and Engineering
714-901-7270
rich@kehoetesting.com
www.kehoetesting.com

CPT: CPT-2
Total depth: 50.09 ft, Date: 4/4/2016
Cone Type: Vertek

Project: **Southern California Geotechnical, Inc./2-CI Buildings**
Location: **400 N. Studebaker Rd Long Beach, CA**

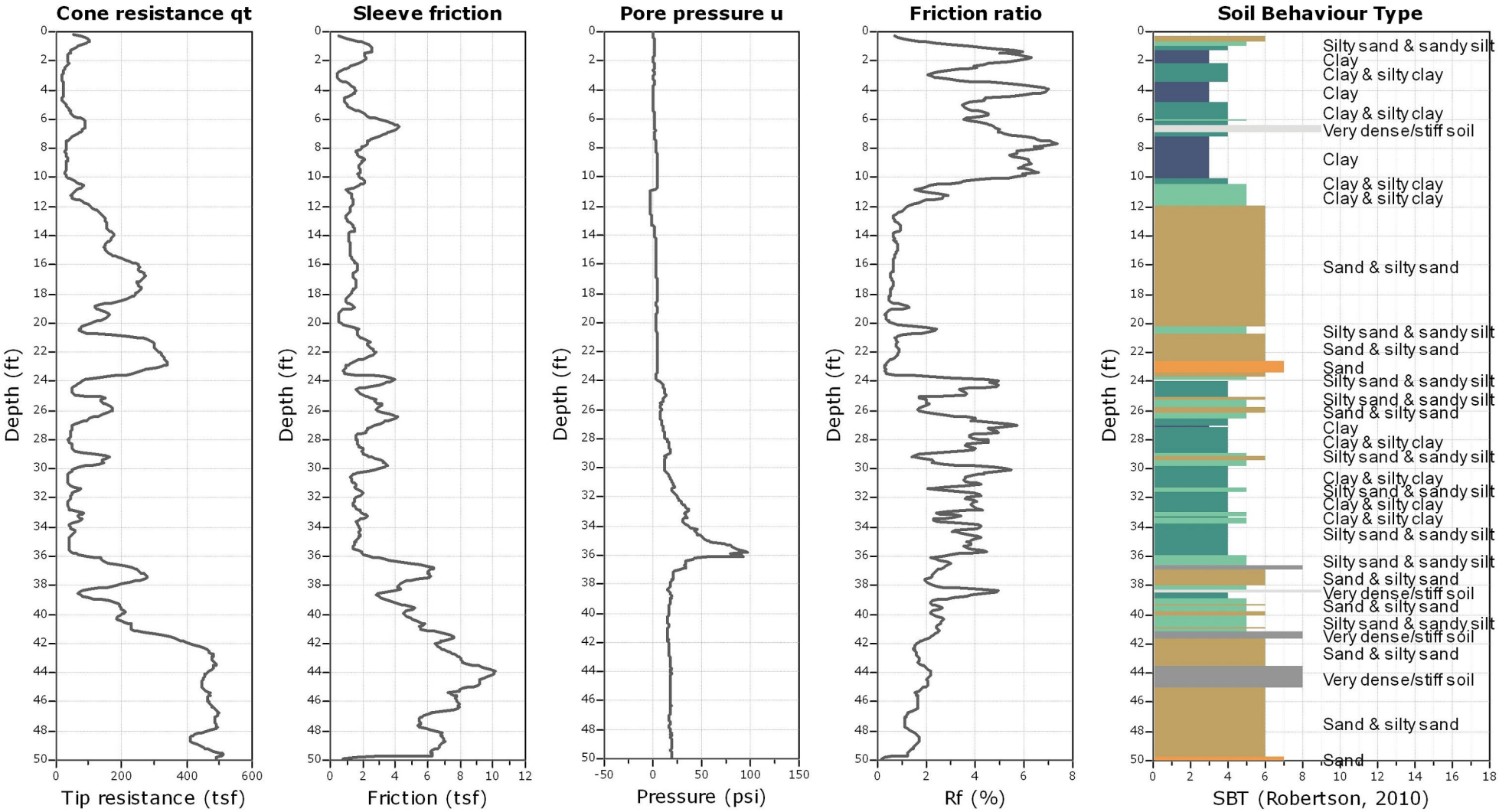

Kehoe Testing and Engineering
714-901-7270
rich@kehoetesting.com
www.kehoetesting.com

CPT: CPT-3
Total depth: 50.05 ft, Date: 4/4/2016
Cone Type: Vertek

Project: **Southern California Geotechnical, Inc./2-CI Buildings**
Location: **400 N. Studebaker Rd Long Beach, CA**

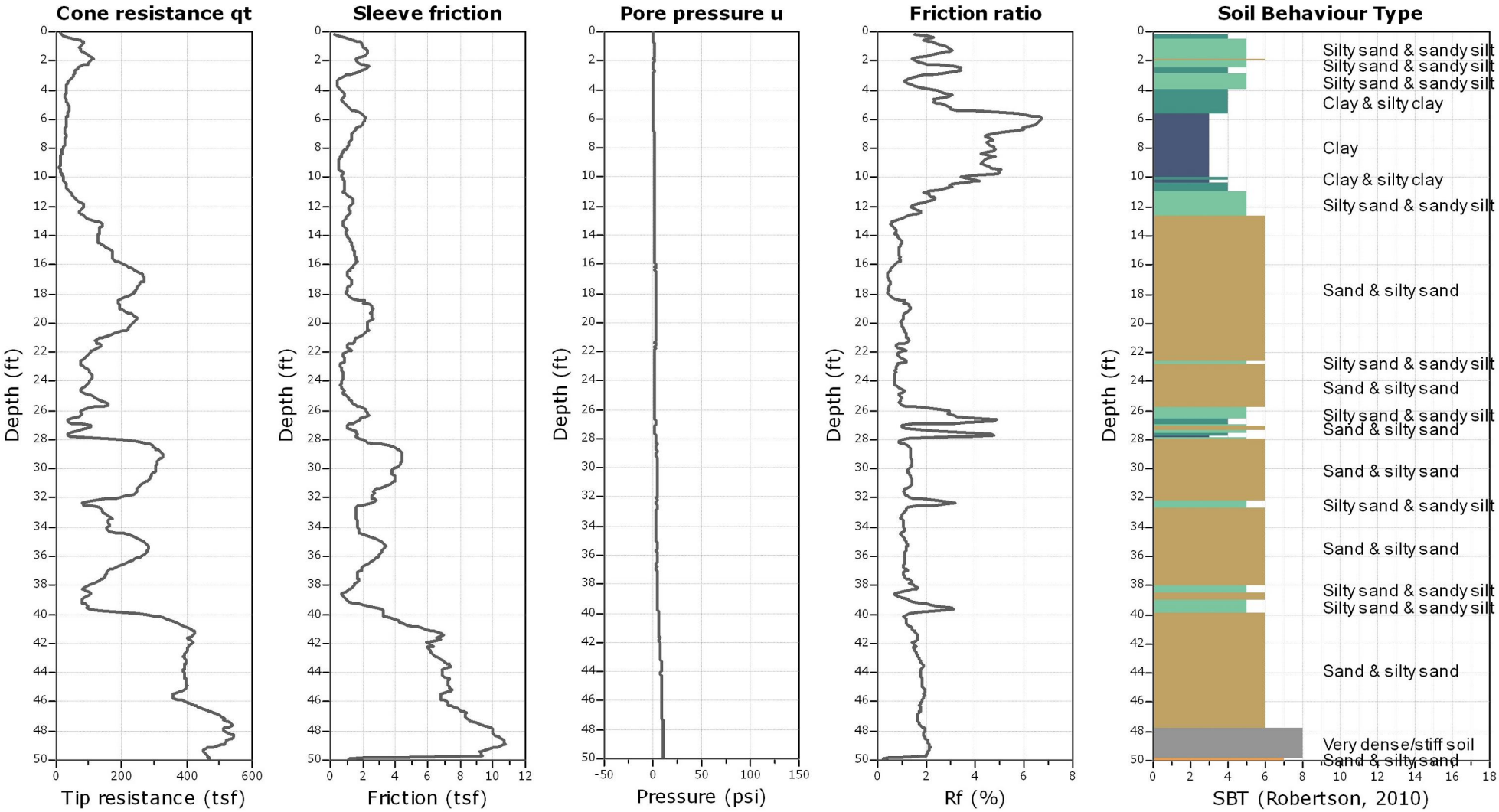

Kehoe Testing and Engineering
714-901-7270
rich@kehoetesting.com
www.kehoetesting.com

CPT: CPT-4
Total depth: 50.05 ft, Date: 4/4/2016
Cone Type: Vertek

Project: **Southern California Geotechnical, Inc./2-CI Buildings**
Location: **400 N. Studebaker Rd Long Beach, CA**

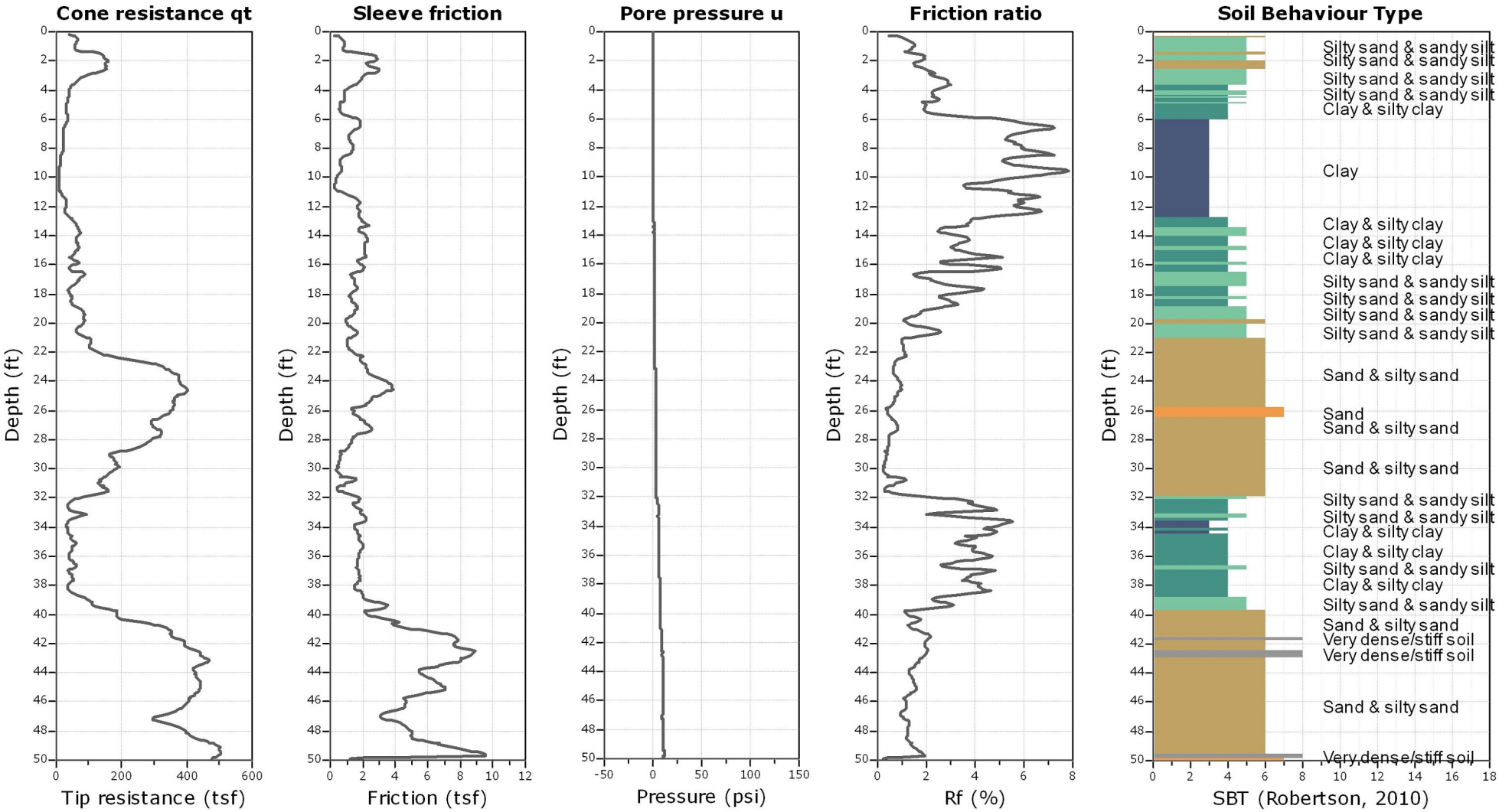

Kehoe Testing and Engineering
714-901-7270
rich@kehoetesting.com
www.kehoetesting.com

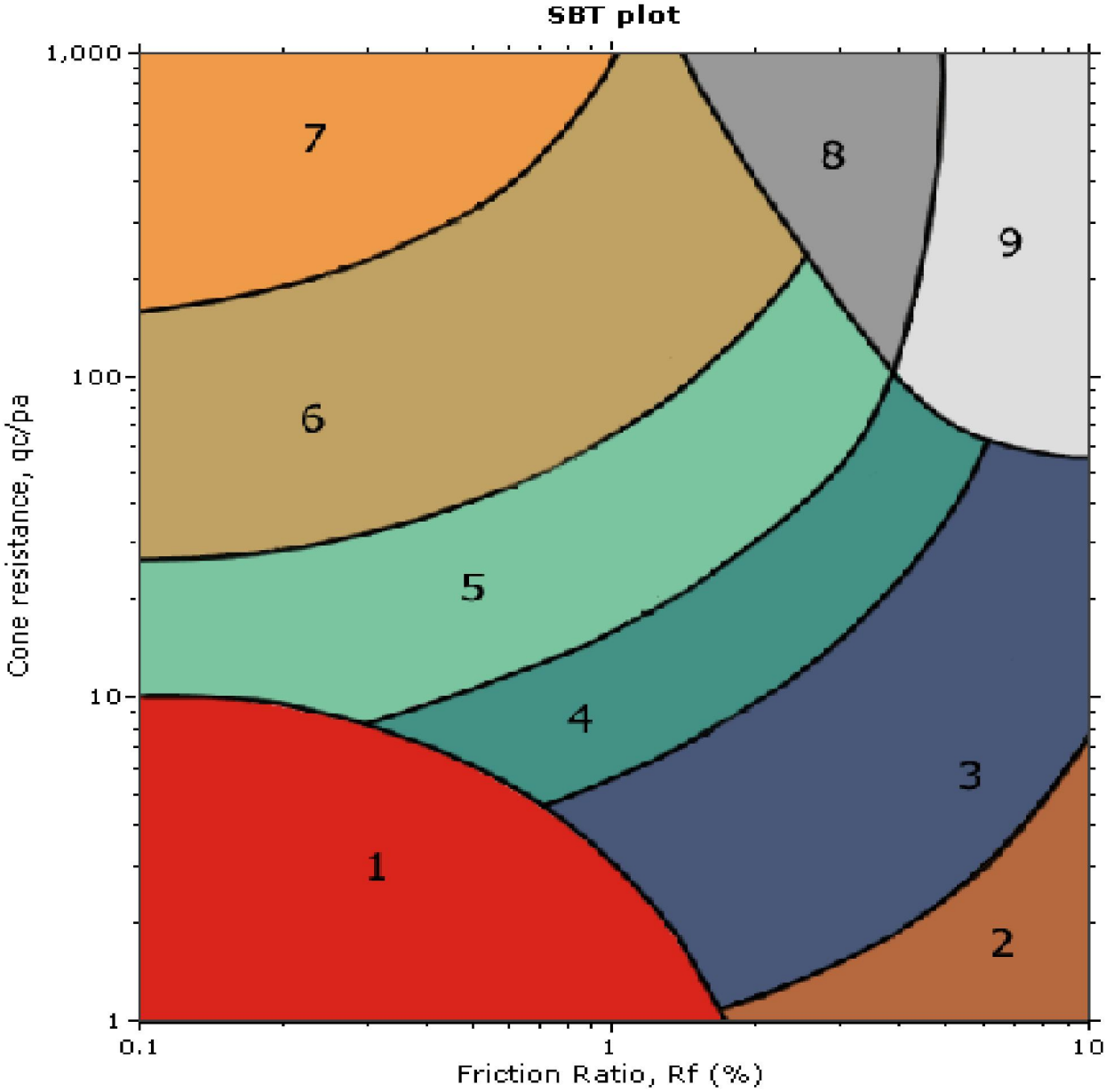

SBT legend

1. Sensitive fine grained
2. Organic material
3. Clay to silty clay
4. Clayey silt to silty clay
5. Silty sand to sandy silt
6. Clean sand to silty sand
7. Gravely sand to sand
8. Very stiff sand to clayey sand
9. Very stiff fine grained

	CPT-1	In situ data										Basic output data								
Depth (ft)	qc (tsf)	fs (tsf)	u (psi)	Other	qt (tsf)	Rf(%)	SBT	Ic SBT	ã (pcf)	ó,v (tsf)	u0 (tsf)	ó',vo (tsf)	Qt1	Fr (%)	Bq	SBTn	n	Cn	Ic	Qtn
1	47.7	1.6	-0.12	-0.39	47.6985	3.3544	4	2.51895	123.1369	0.06157	0	0.0616	773.72	3.3587	-2E-04	8	0.6286	5.9763	2.0325	269.0565
2	37.7	0.6	-0.18	-0.44	37.6978	1.5916	5	2.38771	115.3862	0.11926	0	0.1193	315.09	1.5967	-3E-04	6	0.604	3.7376	1.9596	132.7412
3	59	0.63	-0.18	-0.56	58.9978	1.0678	5	2.12835	116.8357	0.17768	0	0.1777	331.05	1.0711	-2E-04	6	0.5469	2.6532	1.8042	147.4892
4	69.8	0.52	-0.34	-0.64	69.7958	0.745	6	1.97931	115.8415	0.2356	0	0.2356	295.25	0.7476	-4E-04	6	0.5141	2.1644	1.7118	142.289
5	91.3	1.03	-1.02	-0.78	91.2875	1.1283	6	1.99314	121.4973	0.29635	0	0.2964	307.04	1.132	-8E-04	6	0.5407	1.9899	1.7754	171.1233
6	82.3	3.02	-5.57	-1	82.2318	3.6725	4	2.38346	129.1134	0.36091	0	0.3609	226.85	3.6887	-0.005	8	0.6987	2.1202	2.1836	164.0469
7	41.2	2.24	-5.9	-1	41.1278	5.4464	3	2.71335	125.2373	0.42352	0	0.4235	96.108	5.5031	-0.01	9	0.8238	2.1261	2.5038	81.79011
8	22.2	1.15	-2.55	-0.92	22.1688	5.1875	3	2.8916	118.8517	0.48295	0	0.483	44.903	5.303	-0.008	3	0.8962	2.0195	2.6861	41.39029
9	58	1.66	-3.91	-0.98	57.9521	2.8644	5	2.41048	123.8811	0.54489	0	0.5449	105.36	2.8916	-0.005	5	0.7397	1.6338	2.268	88.64336
10	32	0.71	-1.37	-1.06	31.9832	2.2199	4	2.53218	116.217	0.603	0.0312	0.5718	54.88	2.2626	-0.004	5	0.7847	1.6208	2.3826	48.06878
11	83.8	0.91	-9.48	-1.13	83.684	1.0874	6	2.0123	120.3788	0.66319	0.0624	0.6008	138.19	1.0961	-0.009	6	0.6035	1.4072	1.9036	110.4086
12	168.3	1.16	-10.17	-1.22	168.176	0.6898	6	1.65245	123.8572	0.72512	0.0936	0.6315	265.16	0.6927	-0.005	6	0.4794	1.2808	1.5741	202.6843
13	162.3	1.24	-8.27	-1.27	162.199	0.7645	6	1.69332	124.257	0.78725	0.1248	0.6625	243.66	0.7682	-0.004	6	0.4987	1.2631	1.6207	192.6773
14	199.6	1.03	-7.04	-1.29	199.514	0.5163	6	1.51565	123.4043	0.84895	0.156	0.693	286.7	0.5185	-0.003	6	0.4373	1.2033	1.4558	225.9325
15	220.9	1.06	-4.57	-1.31	220.844	0.48	6	1.46141	123.8621	0.91088	0.1872	0.7237	303.91	0.482	-0.002	6	0.4213	1.1736	1.4099	243.9312
16	140.1	0.64	-4.65	-1.35	140.043	0.457	6	1.61	119.0593	0.97041	0.2184	0.752	184.94	0.4602	-0.004	6	0.4781	1.1773	1.5553	154.7428
17	87.4	0.89	-3.11	-1.41	87.3619	1.0188	6	1.98005	120.3211	1.03057	0.2496	0.781	110.54	1.0309	-0.005	6	0.6199	1.2071	1.9239	98.49106
18	181.9	1.24	-10.95	-1.55	181.766	0.6822	6	1.62357	124.5348	1.09284	0.2808	0.812	222.49	0.6863	-0.006	6	0.4921	1.1391	1.5847	194.5065
19	248.9	2.45	-9.54	-1.63	248.783	0.9848	6	1.63688	130.283	1.15798	0.312	0.846	292.71	0.9894	-0.004	6	0.5024	1.119	1.6074	261.8675
20	215.7	2.18	-8.07	-1.71	215.601	1.0111	6	1.68754	129.0795	1.22252	0.3432	0.8793	243.8	1.0169	-0.004	6	0.5251	1.1021	1.6623	223.2853
21	113.9	3.44	-8.69	-1.81	113.794	3.023	5	2.22722	130.8585	1.28795	0.3744	0.9136	123.15	3.0576	-0.009	5	0.7331	1.1137	2.2043	118.4167
22	155.4	3.49	8.03	-1.8	155.498	2.2444	5	2.04099	131.7256	1.35381	0.4056	0.9482	162.56	2.2641	0.0011	5	0.6668	1.0759	2.0262	156.7316
23	119.2	3.2	-1.75	-1.92	119.179	2.6851	5	2.17502	130.4421	1.41903	0.4368	0.9822	119.89	2.7174	-0.005	5	0.7221	1.0552	2.1672	117.4365
24	55.5	2.51	2.33	-1.99	55.5285	4.5202	4	2.56491	126.8023	1.48243	0.468	1.0144	53.277	4.6442	-0.006	4	0.8773	1.0377	2.5706	53.00242
25	41.3	1.53	11.54	-2.07	41.4413	3.692	4	2.59187	122.4665	1.54366	0.4992	1.0445	38.199	3.8348	0.0083	4	0.8944	1.0117	2.6115	38.14672
26	46.6	2.01	16	-2.13	46.7958	4.2953	4	2.60033	124.7595	1.60604	0.5304	1.0756	42.012	4.4479	0.0138	4	0.9015	0.9853	2.6263	42.07993
27	37.7	2	16	-2.23	37.8958	5.2776	3	2.72835	124.2085	1.66815	0.5616	1.1066	32.739	5.5206	0.0163	3	0.9573	0.9581	2.7691	32.80196
28	39.2	1.62	59.65	-2.31	39.9301	4.0571	4	2.63186	122.7942	1.72955	0.5928	1.1368	33.605	4.2408	0.0969	4	0.9247	0.9359	2.6798	33.78699
29	52.9	2.38	59.32	-2.5	53.6261	4.4381	4	2.56948	126.3281	1.79271	0.624	1.1687	44.351	4.5916	0.0704	4	0.9024	0.9142	2.6173	44.78326
30	42.6	1.94	173.12	-2.58	44.719	4.3382	4	2.61727	124.3894	1.8549	0.6552	1.1997	35.729	4.5259	0.2755	4	0.9275	0.89	2.6792	36.05581
31	50.6	2.41	109.77	-2.7	51.9436	4.6397	4	2.593	126.342	1.91808	0.6864	1.2317	40.616	4.8175	0.1443	4	0.921	0.8695	2.6582	41.10621
32	40.5	1.74	150.46	-2.82	42.3416	4.1094	4	2.6175	123.4601	1.97981	0.7176	1.2622	31.977	4.311	0.2506	4	0.9379	0.8475	2.6986	32.32966
33	315.7	7.02	5.04	-2.98	315.762	2.2232	6	1.85628	137.28	2.04845	0.7488	1.2997	241.38	2.2377	-0.001	6	0.632	0.8781	1.8911	260.3543
34	350.3	7.23	7.37	-3.07	350.39	2.0634	6	1.80483	137.28	2.11709	0.78	1.3371	260.47	2.076	-7E-04	6	0.6152	0.8659	1.8422	285.0137
35	323.8	5.31	7.85	-3.12	323.896	1.6394	6	1.73978	136.5862	2.18538	0.8112	1.3742	234.11	1.6506	-8E-04	6	0.5942	0.8561	1.7829	260.3048
36	224.1	4.67	6.84	-3.16	224.184	2.0831	6	1.91734	134.749	2.25275	0.8424	1.4104	157.36	2.1043	-0.002	6	0.6692	0.8251	1.9745	173.0503
37	205.9	4.22	2.68	-3.15	205.933	2.0492	6	1.93392	133.8005	2.31965	0.8736	1.4461	140.81	2.0726	-0.003	5	0.6798	0.8087	1.9985	155.6188
38	92.3	3.12	17.17	-3.18	92.5102	3.3726	5	2.3219	129.639	2.38447	0.9048	1.4797	60.909	3.4618	0.0037	4	0.8423	0.7539	2.4205	64.2162
39	144.4	4.47	3.99	-3.29	144.449	3.0945	5	2.16976	133.3567	2.45115	0.936	1.5152	93.718	3.1479	-0.005	5	0.7819	0.7552	2.2573	101.3505
40	237.9	5.19	4.12	-3.36	237.95	2.1811	6	1.9182	135.6668	2.51898	0.9672	1.5518	151.72	2.2045	-0.003	5	0.6827	0.77	1.993	171.318
41	155.3	4.85	1.91	-3.46	155.323	3.1225	5	2.15362	134.1307	2.58605	0.9984	1.5877	96.203	3.1754	-0.006	5	0.7827	0.7279	2.2501	105.0718
42	209.7	5.36	2.84	-3.56	209.735	2.5556	5	2.00608	135.5948	2.65385	1.0296	1.6243	127.49	2.5884	-0.004	5	0.7252	0.7329	2.0956	143.4272
43	373.6	5.49	1.93	-3.64	373.624	1.4694	6	1.66566	137.1785	2.72244	1.0608	1.6616	223.21	1.4802	-0.002	6	0.5903	0.7661	1.7368	268.5517
44	331.4	4.55	3.26	-3.71	331.44	1.3728	6	1.67093	135.5121	2.79019	1.092	1.6982	193.53	1.3845	-0.003	6	0.5972	0.7539	1.7505	234.1526
45	381.1	6	5.45	-3.77	381.167	1.5741	6	1.68592	137.28	2.85883	1.1232	1.7356	217.97	1.586	-0.002	6	0.6042	0.7415	1.7642	265.1236
46	326.3	5.33	5.2	-3.85	326.364	1.6332	6	1.73654	136.6322	2.92715	1.1544	1.7728	182.45	1.6479	-0.002	6	0.6293	0.7227	1.8254	220.9124
47	303.1	4.89	6.41	-3.89	303.178	1.6129	6	1.7504	135.8221	2.99506	1.1856	1.8095	165.9	1.629	-0.002	6	0.6391	0.7097	1.8467	201.3375
48	196.4	3.39	5.18	-3.89	196.463	1.7255	6	1.88828	132.0832	3.0611	1.2168	1.8443	104.86	1.7528	-0.004	5	0.7031	0.6766	2.0101	123.6733
49	273.1	3.3	4.04	-3.87	273.149	1.2081	6	1.67784	132.6901	3.12745	1.248	1.8795	143.67	1.2221	-0.004	6	0.6195	0.7005	1.7864	178.7694
50	386.9	0	8.96	-3.92	387.01	0	0	0	120.9	3.1879	1.2792	1.9087	201.09	0	-0.002	0	1	0.5544	0	0

	CPT-2	In situ data										Basic output data								
Depth (ft)	qc (tsf)	fs (tsf)	u (psi)	Other	qt (tsf)	Rf(%)	SBT	Ic SBT	ã (pcf)	ó,v (tsf)	u0 (tsf)	ó',vo (tsf)	Qt1	Fr (%)	Bq	SBTn	n	Cn	Ic	Qtn
1	68	2.5	0.89	-0.99	68.0109	3.6759	4	2.43918	127.2676	0.06363	0	0.0636	1067.8	3.6793	0.0009	8	0.6172	5.6685	2.0038	364.0088
2	36.5	2.02	0.69	-1.05	36.5085	5.533	3	2.75433	124.1903	0.12573	0	0.1257	289.37	5.5521	0.0014	9	0.7427	4.8652	2.3266	167.2868
3	18.8	0.38	0.73	-1.11	18.8089	2.0203	4	2.6937	110.3484	0.1809	0	0.1809	102.97	2.0399	0.0028	5	0.7222	3.5808	2.2649	63.04088
4	22.1	1.55	0.44	-1.11	22.1054	7.0119	3	2.98166	121.0288	0.24142	0	0.2414	90.565	7.0893	0.0015	9	0.8587	3.5571	2.619	73.50088
5	29.1	1.01	0.44	-1.15	29.1054	3.4702	4	2.68738	118.5658	0.3007	0	0.3007	95.792	3.5064	0.0011	4	0.7742	2.6486	2.3903	72.10354
6	82	2.93	1.38	-1.21	82.0169	3.5724	4	2.37524	128.8856	0.36514	0	0.3651	223.62	3.5884	0.0012	8	0.6964	2.0979	2.1771	161.8888
7	66	3.42	2.04	-1.25	66.025	5.1799	4	2.55864	129.4881	0.42989	0	0.4299	152.59	5.2138	0.0022	9	0.7751	2.0101	2.3752	124.609
8	29.2	1.98	3.15	-1.21	29.2386	6.7719	3	2.88453	123.5024	0.49164	0	0.4916	58.472	6.8877	0.0079	3	0.8999	1.9932	2.6927	54.15234
9	30.1	1.89	4.07	-1.21	30.1498	6.2687	3	2.85135	123.2369	0.55326	0	0.5533	53.495	6.3859	0.0099	3	0.9013	1.794	2.6893	50.17912
10	34.3	1.85	4.51	-1.23	34.3552	5.3849	3	2.76459	123.3988	0.61496	0.0312	0.5838	57.799	5.4831	0.0087	4	0.8764	1.6842	2.6202	53.70326
11	57.4	0.74	-2.88	-1.29	57.3648	1.29	5	2.18718	117.9447	0.67393	0.0624	0.6115	92.703	1.3053	-0.005	5	0.6676	1.442	2.0705	77.2605
12	107.5	1.27	-2.38	-1.33	107.471	1.1817	6	1.95235	123.428	0.73564	0.0936	0.642	166.24	1.1899	-0.002	6	0.5899	1.3427	1.8626	135.4453
13	149.8	1.05	-1.96	-1.39	149.776	0.7011	6	1.69582	122.8456	0.79707	0.1248	0.6723	221.61	0.7048	-0.002	6	0.5003	1.2547	1.6236	176.662
14	175.7	1.07	0.8	-1.45	175.71	0.609	6	1.60344	123.3732	0.85875	0.156	0.7028	248.81	0.612	-6E-04	6	0.4707	1.2124	1.5421	200.3515
15	148.9	1.21	2.66	-1.54	148.933	0.8125	6	1.73865	123.8696	0.92069	0.1872	0.7335	201.79	0.8175	3E-05	6	0.5247	1.212	1.6799	169.5344
16	248.8	1.64	2.98	-1.63	248.836	0.6591	6	1.51206	127.3465	0.98436	0.2184	0.766	323.58	0.6617	-2E-05	6	0.4461	1.155	1.4697	270.5584
17	263	1.55	3.96	-1.68	263.048	0.5893	6	1.46124	127.069	1.04789	0.2496	0.7983	328.2	0.5916	0.0001	6	0.4308	1.1291	1.4254	279.5659
18	241.4	1.28	3.96	-1.73	241.448	0.5301	6	1.45868	125.4596	1.11062	0.2808	0.8298	289.62	0.5326	2E-05	6	0.4329	1.1109	1.427	252.3366
19	120.3	1.17	3.73	-1.74	120.346	0.9722	6	1.85966	123.1039	1.17218	0.312	0.8602	138.55	0.9818	-4E-04	6	0.5863	1.1291	1.8259	127.1696
20	107.5	0.55	2.91	-1.69	107.536	0.5115	6	1.73291	117.3062	1.23083	0.3432	0.8876	119.76	0.5174	-0.001	6	0.5416	1.0998	1.7051	110.4954
21	249.7	1.85	4.34	-1.73	249.753	0.7407	6	1.54623	128.2371	1.29495	0.3744	0.9206	269.9	0.7446	-3E-04	6	0.4762	1.0686	1.5291	250.9155
22	317	2.79	4.4	-1.81	317.054	0.88	6	1.53063	131.8253	1.36086	0.4056	0.9553	330.48	0.8838	-3E-04	6	0.4742	1.0497	1.5197	313.1795
23	322.5	0.93	4.22	-1.91	322.552	0.2883	7	1.19762	123.8287	1.42277	0.4368	0.986	325.7	0.2896	-4E-04	7	0.3506	1.0251	1.1915	311.1001
24	75.5	3.69	6.25	-1.98	75.5765	4.8825	4	2.50096	130.3736	1.48796	0.468	1.02	72.639	4.9805	-2E-04	4	0.8524	1.0318	2.5044	72.24585
25	95	2.17	13.65	-1.97	95.1671	2.2802	5	2.18824	127.0512	1.55149	0.4992	1.0523	88.964	2.318	0.0052	5	0.7368	1.0041	2.1971	88.83484
26	170.8	2.81	8.21	-2	170.9	1.6442	6	1.91157	130.3703	1.61667	0.5304	1.0863	155.84	1.6599	0.0004	6	0.6337	0.9835	1.9222	157.3461
27	51.2	2.84	8.95	-2.02	51.3096	5.535	4	2.65286	127.5133	1.68043	0.5616	1.1188	44.358	5.7225	0.0017	3	0.9272	0.9496	2.6885	44.53871
28	37.4	1.63	14.02	-2.1	37.5716	4.3384	4	2.6711	122.6907	1.74177	0.5928	1.149	31.184	4.5493	0.0116	4	0.9424	0.9253	2.7246	31.33261
29	121.5	2.08	17.52	-2.17	121.714	1.7089	5	2.02391	127.3414	1.80545	0.624	1.1815	101.49	1.7347	0.0053	5	0.6893	0.9268	2.0562	105.0306
30	55.9	2.95	11.79	-2.24	56.0443	5.2637	4	2.61096	128.0067	1.86945	0.6552	1.2143	44.616	5.4453	0.0036	4	0.9243	0.8805	2.6691	45.08324
31	36.8	1.49	19.52	-2.32	37.0389	4.0228	4	2.6529	121.9988	1.93045	0.6864	1.2441	28.221	4.244	0.0205	4	0.9507	0.8574	2.7347	28.44725
32	42.4	1.53	24.87	-2.35	42.7044	3.5828	4	2.57343	122.5398	1.99172	0.7176	1.2741	31.954	3.758	0.0264	4	0.9226	0.8425	2.6572	32.41626
33	75.7	1.93	35.07	-2.39	76.1293	2.5352	5	2.28891	125.6492	2.05454	0.7488	1.3057	56.73	2.6055	0.024	5	0.8104	0.8433	2.3585	59.03768
34	39.5	1.8	36.4	-2.42	39.9455	4.5061	4	2.66361	123.566	2.11633	0.78	1.3363	28.308	4.7582	0.0487	3	0.9676	0.7978	2.7676	28.52306
35	40.7	1.54	56.69	-2.5	41.3939	3.7204	4	2.59452	122.5114	2.17758	0.8112	1.3664	28.701	3.9269	0.0834	4	0.9451	0.7853	2.7046	29.10678
36	92.8	2.42	91.86	-2.58	93.9244	2.5765	5	2.2307	127.817	2.24149	0.8424	1.3991	65.53	2.6395	0.063	5	0.7974	0.8003	2.3126	69.34542
37	249.4	5.98	27.61	-2.58	249.738	2.3945	6	1.93933	136.8215	2.3099	0.8736	1.4363	172.27	2.4169	0.0045	5	0.6792	0.8126	1.9974	190.014
38	176	4.08	17.56	-2.55	176.215	2.3154	5	2.01736	133.1735	2.37649	0.9048	1.4717	118.12	2.347	0.0021	5	0.7165	0.7895	2.0908	129.7047
39	142.3	3.42	18.25	-2.6	142.523	2.3996	5	2.08753	131.3649	2.44217	0.936	1.5062	93.005	2.4414	0.0027	5	0.7498	0.7674	2.1738	101.5968
40	202.4	4.46	16.03	-2.65	202.596	2.2014	6	1.96294	134.1654	2.50925	0.9672	1.5421	129.75	2.229	0.0009	5	0.7009	0.768	2.042	145.2264
41	226	5.47	15.23	-2.74	226.186	2.4184	6	1.96749	135.9277	2.57722	0.9984	1.5788	141.63	2.4462	0.0004	5	0.7049	0.7542	2.0479	159.3861
42	406.1	6.55	15.68	-2.9	406.292	1.6121	6	1.67986	137.28	2.64586	1.0296	1.6163	249.74	1.6227	0.0003	6	0.5907	0.7786	1.7436	297.0257
43	474.1	7.98	16.85	-3.04	474.306	1.6825	6	1.66152	137.28	2.7145	1.0608	1.6537	285.17	1.6921	0.0003	6	0.5849	0.7702	1.7237	343.2503
44	461.4	10	18.24	-3.07	461.623	2.1663	8	1.76339	137.28	2.78314	1.092	1.6911	271.32	2.1794	0.0005	6	0.6274	0.7451	1.8306	323.1169
45	446.5	8.54	17.99	-3.17	446.72	1.9117	6	1.72263	137.28	2.85178	1.1232	1.7286	256.78	1.924	0.0004	6	0.6154	0.7393	1.7944	310.1327
46	465.8	7.75	17.96	-3.24	466.02	1.663	6	1.66092	137.28	2.92042	1.1544	1.766	262.23	1.6735	0.0003	6	0.5943	0.7376	1.7343	322.8084
47	325.1	5.62	15.62	-3.28	325.291	1.7277	6	1.75756	137.0118	2.98892	1.1856	1.8033	178.73	1.7437	-2E-04	6	0.6402	0.7108	1.8501	216.5243
48	462.5	6.5	17.02	-3.3	462.708	1.4048	6	1.59936	137.28	3.05756	1.2168	1.8408	249.71	1.4141	2E-05	6	0.5769	0.7266	1.6795	315.6188
49	441.2	6.72	18.82	-3.35	441.43	1.5223	6	1.63981	137.28	3.1262	1.248	1.8782	233.36	1.5332	0.0002	6	0.5964	0.7102	1.7258	294.1891
50	488.8	0	19.53	-3.31	489.039	0	0	0	120.9	3.18665	1.2792	1.9075	254.71	0	0.0003	0	1	0.5547	0	0

	CPT-3	In situ data										Basic output data								
Depth (ft)	qc (tsf)	fs (tsf)	u (psi)	Other	qt (tsf)	Rf(%)	SBT	Ic SBT	ã (pcf)	ó,v (tsf)	u0 (tsf)	ó',vo (tsf)	Qt1	Fr (%)	Bq	SBTn	n	Cn	Ic	Qtn
1	73.2	1.95	1.02	-0.01	73.2125	2.6635	5	2.31608	125.6294	0.06281	0	0.0628	1164.5	2.6658	0.001	8	0.5737	5.0542	1.8888	349.4096
2	103.2	1.59	0.85	0.03	103.21	1.5405	5	2.04312	124.9736	0.1253	0	0.1253	822.7	1.5424	0.0006	6	0.5156	3.0044	1.7292	292.7043
3	52.3	0.95	0.65	-0.05	52.308	1.8162	5	2.31126	119.5475	0.18508	0	0.1851	281.63	1.8226	0.0009	6	0.6134	2.9135	1.9791	143.5204
4	30.1	0.68	0.49	-0.11	30.106	2.2587	4	2.5575	115.7536	0.24295	0	0.243	122.92	2.2771	0.0012	5	0.7071	2.8303	2.2238	79.87932
5	35.7	0.94	0.55	-0.2	35.7067	2.6326	4	2.54192	118.5389	0.30222	0	0.3022	117.15	2.655	0.0011	5	0.7246	2.4793	2.2603	82.95615
6	32.2	2.16	0.32	-0.22	32.2039	6.7073	3	2.85219	124.3747	0.36441	0	0.3644	87.373	6.784	0.0007	9	0.857	2.4932	2.5985	75.02284
7	27.8	1.31	1.11	-0.22	27.8136	4.7099	3	2.79054	120.3581	0.42459	0	0.4246	64.507	4.7829	0.0029	4	0.8466	2.1663	2.5635	56.07477
8	21.1	1.01	1.11	-0.24	21.1136	4.7837	3	2.88407	117.7829	0.48348	0	0.4835	42.67	4.8958	0.0039	4	0.8928	2.0123	2.6773	39.23427
9	12.2	0.52	1.15	-0.22	12.2141	4.2574	3	3.03582	111.5904	0.53927	0	0.5393	21.649	4.454	0.0071	3	0.9601	1.91	2.8458	21.07387
10	21.8	0.75	1.2	-0.24	21.8147	3.4381	4	2.78065	115.6848	0.59712	0.0312	0.5659	37.492	3.5348	0.0026	4	0.8741	1.728	2.6178	34.65139
11	42.4	0.76	1.46	-0.28	42.4179	1.7917	5	2.37826	117.4036	0.65582	0.0624	0.5934	70.375	1.8198	0.001	5	0.7337	1.5286	2.2461	60.32966
12	85.2	1.13	1.46	-0.34	85.2179	1.326	5	2.0612	122.0075	0.71682	0.0936	0.6232	135.59	1.3373	0.0001	6	0.6259	1.3928	1.9595	111.2291
13	119.7	0.76	1.57	-0.38	119.719	0.6348	6	1.74697	119.9343	0.77679	0.1248	0.652	182.43	0.639	-1E-04	6	0.5148	1.2831	1.6644	144.2334
14	121.1	1.02	1.73	-0.39	121.121	0.8421	6	1.81761	122.1156	0.83785	0.156	0.6819	176.41	0.848	-3E-04	6	0.5459	1.2711	1.7422	144.4977
15	168	1.46	1.9	-0.38	168.023	0.8689	6	1.71872	125.5381	0.90062	0.1872	0.7134	234.26	0.8736	-3E-04	6	0.5153	1.2252	1.658	193.5196
16	208.3	1.46	2.17	-0.36	208.327	0.7008	6	1.58682	126.0624	0.96365	0.2184	0.7453	278.25	0.7041	-3E-04	6	0.4709	1.1795	1.5373	231.145
17	271	1.29	2.39	-0.4	271.029	0.476	6	1.39013	125.7984	1.02655	0.2496	0.777	347.52	0.4778	-3E-04	6	0.4017	1.1321	1.3518	288.8827
18	235.3	0.94	2.52	-0.4	235.331	0.3994	6	1.39125	123.138	1.08812	0.2808	0.8073	290.15	0.4013	-4E-04	6	0.4048	1.1157	1.356	246.9954
19	193.6	2.62	2.95	-0.37	193.636	1.3531	6	1.81224	130.1626	1.1532	0.312	0.8412	228.82	1.3612	-5E-04	6	0.5674	1.139	1.7787	207.2036
20	235.1	2.21	2.78	-0.36	235.134	0.9399	6	1.63861	129.391	1.21789	0.3432	0.8747	267.43	0.9448	-6E-04	6	0.506	1.1011	1.6134	243.4257
21	138	1.66	2.22	-0.34	138.027	1.2027	6	1.87756	125.9978	1.28089	0.3744	0.9065	150.85	1.2139	-0.002	6	0.5995	1.0972	1.8544	141.7923
22	105.3	1.04	1.99	-0.34	105.324	0.9874	6	1.90835	121.9169	1.34185	0.4056	0.9363	111.06	1.0002	-0.003	6	0.6149	1.0781	1.8911	105.9503
23	75.4	0.67	1.56	-0.38	75.4191	0.8884	6	1.99511	117.885	1.40079	0.4368	0.964	76.783	0.9052	-0.004	6	0.652	1.0626	1.9852	74.33357
24	102	0.74	1.57	-0.42	102.019	0.7254	6	1.83721	119.3489	1.46047	0.468	0.9925	101.32	0.7359	-0.004	6	0.5952	1.0389	1.8326	98.72868
25	107.7	0.94	1.81	-0.42	107.722	0.8726	6	1.86698	121.232	1.52108	0.4992	1.0219	103.93	0.8851	-0.003	6	0.6102	1.0215	1.8684	102.5251
26	81.2	2.24	1.93	-0.4	81.2236	2.7578	5	2.29548	126.8971	1.58453	0.5304	1.0541	75.549	2.8127	-0.005	5	0.7787	1.0029	2.3067	75.48655
27	91.1	1.01	2.44	-0.4	91.1299	1.1083	6	1.98877	121.3496	1.64521	0.5616	1.0836	82.58	1.1287	-0.004	6	0.6652	0.9843	2.0052	83.24142
28	176.2	1.88	3.26	-0.58	176.24	1.0667	6	1.76528	127.5045	1.70896	0.5928	1.1162	156.37	1.0772	-0.002	6	0.5813	0.9694	1.7808	159.9042
29	324.5	4.37	3.66	-0.68	324.545	1.3465	6	1.66948	135.1655	1.77654	0.624	1.1525	280.05	1.3539	-0.001	6	0.5464	0.9544	1.6848	291.1215
30	303	3.55	4.03	-0.66	303.049	1.1714	6	1.6392	133.4778	1.84328	0.6552	1.1881	253.52	1.1786	-0.001	6	0.5386	0.9395	1.6598	267.4446
31	264.9	3.76	4.28	-0.66	264.952	1.4191	6	1.74076	133.5706	1.91007	0.6864	1.2237	214.96	1.4294	-0.001	6	0.5815	0.9189	1.768	228.4452
32	185.3	2.56	3.96	-0.67	185.348	1.3812	6	1.83158	129.8864	1.97501	0.7176	1.2574	145.83	1.3961	-0.002	6	0.6219	0.8982	1.8697	155.6669
33	143.2	1.55	3.49	-0.68	143.243	1.0821	6	1.83429	125.5866	2.0378	0.7488	1.289	109.55	1.0977	-0.004	6	0.6285	0.8833	1.8828	117.8817
34	157.8	1.69	3.31	-0.81	157.841	1.0707	6	1.80058	126.456	2.10103	0.78	1.321	117.89	1.0852	-0.003	6	0.6181	0.8718	1.8522	128.32
35	269.1	3.21	3.68	-0.96	269.145	1.1927	6	1.67756	132.4518	2.16726	0.8112	1.3561	196.88	1.2024	-0.002	6	0.5702	0.8681	1.7222	219.0303
36	260.2	2.95	3.75	-1.03	260.246	1.1335	6	1.66995	131.7517	2.23313	0.8424	1.3907	185.52	1.1434	-0.002	6	0.571	0.8555	1.7198	208.6066
37	158.7	1.97	3.66	-1.03	158.745	1.241	6	1.8439	127.5917	2.29693	0.8736	1.4233	109.92	1.2592	-0.004	6	0.6458	0.8257	1.9121	122.0893
38	97.3	1.46	3.98	-1.01	97.3487	1.4998	5	2.05366	124.2068	2.35903	0.9048	1.4542	65.32	1.537	-0.007	5	0.7357	0.7914	2.1443	71.04614
39	75.3	1.01	4.12	-1.04	75.3504	1.3404	5	2.10503	120.8859	2.41947	0.936	1.4835	49.162	1.3849	-0.009	5	0.7629	0.7728	2.2121	53.26237
40	280.2	3.21	5.43	-1.03	280.266	1.1453	6	1.65281	132.5505	2.48575	0.9672	1.5186	182.93	1.1556	-0.002	6	0.5759	0.8122	1.717	213.2101
41	411.4	5.78	6.29	-1.07	411.477	1.4047	6	1.62635	137.28	2.55439	0.9984	1.556	262.81	1.4135	-0.001	6	0.5649	0.8043	1.6832	310.8223
42	415.4	5.91	6.65	-1.17	415.481	1.4225	6	1.62867	137.28	2.62303	1.0296	1.5934	259.1	1.4315	-0.001	6	0.5689	0.7922	1.6891	309.1199
43	392.8	6.63	7.98	-1.25	392.898	1.6875	6	1.70439	137.28	2.69167	1.0608	1.6309	239.26	1.6991	-0.001	6	0.6018	0.7708	1.7709	284.2449
44	390.2	6.89	8.2	-1.29	390.3	1.7653	6	1.72256	137.28	2.76031	1.092	1.6683	232.3	1.7779	-0.001	6	0.6121	0.7568	1.7933	277.169
45	397.4	7.31	8.33	-1.31	397.502	1.839	6	1.73359	137.28	2.82895	1.1232	1.7058	231.38	1.8522	-0.001	6	0.6193	0.744	1.8076	277.5032
46	394.3	7.15	8.51	-1.29	394.404	1.8129	6	1.73004	137.28	2.89759	1.1544	1.7432	224.59	1.8263	-0.001	6	0.6213	0.7333	1.8081	271.3308
47	505.6	8.27	9.22	-1.31	505.713	1.6353	6	1.63716	137.28	2.96623	1.1856	1.7806	282.34	1.645	-0.001	6	0.5851	0.7375	1.7085	350.3931
48	512.7	9.93	9.79	-1.43	512.82	1.9364	8	1.69898	137.28	3.03487	1.2168	1.8181	280.4	1.9479	-0.001	6	0.6117	0.7181	1.7735	345.9921
49	494.6	10.54	10.09	-1.67	494.724	2.1305	8	1.743	137.28	3.10351	1.248	1.8555	264.95	2.1439	-0.001	6	0.6322	0.7011	1.8227	325.7542
50	463.5	0	10.33	-1.83	463.626	0	0	0	120.9	3.16396	1.2792	1.8848	244.31	0	-0.001	0	1	0.5614	0	0

	CPT-4	In situ data										Basic output data								
Depth (ft)	qc (tsf)	fs (tsf)	u (psi)	Other	qt (tsf)	Rf(%)	SBT	Ic SBT	ã (pcf)	ó,v (tsf)	u0 (tsf)	ó',vo (tsf)	Qt1	Fr (%)	Bq	SBTn	n	Cn	Ic	Qtn
1	56.1	0.84	0	-0.54	56.1	1.4973	5	2.23471	118.8178	0.05941	0	0.0594	943.3	1.4989	0	6	0.526	4.5488	1.7698	240.9185
2	158.7	2.72	0.62	-0.67	158.708	1.7138	6	1.94635	129.9515	0.12438	0	0.1244	1274.9	1.7152	0.0003	6	0.4951	2.8859	1.6765	432.5283
3	95.8	2.06	0.41	-0.72	95.805	2.1502	5	2.1679	126.6869	0.18773	0	0.1877	509.34	2.1544	0.0003	6	0.5797	2.7249	1.8911	246.2407
4	39.8	0.93	0.18	-0.72	39.8022	2.3366	5	2.47248	118.7254	0.24709	0	0.2471	160.08	2.3512	0.0003	5	0.6843	2.7054	2.163	101.1352
5	31.4	0.62	0	-0.75	31.4	1.9745	4	2.5074	115.1803	0.30468	0	0.3047	102.06	1.9939	0	5	0.7091	2.4178	2.2201	71.05376
6	34.4	1.68	0.21	-0.82	34.4026	4.8834	3	2.73436	122.6969	0.36603	0	0.366	92.989	4.9359	0.0004	9	0.8142	2.3733	2.486	76.34221
7	21.8	1.25	0.18	-0.86	21.8022	5.7334	3	2.92619	119.4211	0.42574	0	0.4257	50.21	5.8476	0.0006	3	0.8943	2.2573	2.6885	45.60355
8	23.7	1.4	0.13	-0.94	23.7016	5.9068	3	2.90841	120.4541	0.48597	0	0.486	47.772	6.0304	0.0004	3	0.9049	2.022	2.7064	44.36405
9	11.3	0.58	0.09	-0.92	11.3011	5.1322	3	3.11232	112.1999	0.54207	0	0.5421	19.848	5.3908	0.0006	3	0.9892	1.9379	2.9226	19.70522
10	6.7	0.41	0.09	-0.96	6.7011	6.1184	3	3.33869	108.3872	0.59626	0.0312	0.5651	10.804	6.716	-0.004	3	1	1.8726	3.1823	10.80387
11	11.6	0.63	0.26	-0.96	11.6032	5.4295	3	3.11862	112.8693	0.6527	0.0624	0.5903	18.551	5.7532	-0.004	3	1	1.7925	2.961	18.55087
12	29.5	1.64	0.44	-1.02	29.5054	5.5583	3	2.82137	122.146	0.71377	0.0936	0.6202	46.426	5.6961	-0.002	3	0.9045	1.6213	2.6898	44.11585
13	51.2	1.94	0.71	-1.07	51.2087	3.7884	4	2.53404	124.7199	0.77613	0.1248	0.6513	77.43	3.8467	-0.001	4	0.8054	1.4781	2.4268	70.45269
14	68	2.17	0.79	-1.09	68.0097	3.1907	5	2.39456	126.2318	0.83924	0.156	0.6832	98.311	3.2306	-0.001	5	0.7602	1.3945	2.3043	88.52187
15	64.7	2.13	0.88	-1.19	64.7108	3.2916	4	2.41928	125.9743	0.90223	0.1872	0.715	89.239	3.3381	-0.002	5	0.7746	1.3547	2.3381	81.69309
16	55.9	1.93	0.97	-1.3	55.9119	3.4519	4	2.47848	124.8964	0.96468	0.2184	0.7463	73.628	3.5125	-0.003	4	0.8019	1.3231	2.405	68.70758
17	69.5	1.53	1.65	-1.42	69.5202	2.2008	5	2.27424	123.7283	1.02654	0.2496	0.7769	88.158	2.2338	-0.002	5	0.73	1.2529	2.2133	81.10289
18	44.2	1.25	1.59	-1.52	44.2195	2.8268	4	2.49233	121.1459	1.08712	0.2808	0.8063	53.493	2.8981	-0.004	5	0.8168	1.2485	2.437	50.89484
19	69.6	1.69	1.46	-1.61	69.6179	2.4275	5	2.30327	124.4595	1.14935	0.312	0.8374	81.768	2.4683	-0.003	5	0.7506	1.192	2.2594	77.13294
20	82.8	1.04	1.33	-1.75	82.8163	1.2558	5	2.05539	121.3305	1.21001	0.3432	0.8668	94.145	1.2744	-0.003	6	0.6611	1.1409	2.0208	87.99323
21	97.4	1.22	1.59	-1.81	97.4195	1.2523	6	2.00101	122.8946	1.27146	0.3744	0.8971	107.18	1.2689	-0.003	6	0.6448	1.1124	1.9745	101.0765
22	128.7	1.45	1.59	-1.86	128.719	1.1265	6	1.88021	124.8379	1.33388	0.4056	0.9283	137.23	1.1383	-0.002	6	0.6032	1.0822	1.8615	130.2816
23	328.6	2.17	2.06	-2.09	328.625	0.6603	6	1.42732	130.0738	1.39891	0.4368	0.9621	340.11	0.6632	-9E-04	6	0.4357	1.0423	1.4177	322.3387
24	377.5	3.48	2.71	-2.16	377.533	0.9218	6	1.49843	133.8681	1.46585	0.468	0.9979	376.88	0.9254	-7E-04	6	0.4662	1.0277	1.4936	365.2649
25	370.5	2.87	3	-2.15	370.537	0.7746	6	1.44461	132.4123	1.53205	0.4992	1.0329	357.27	0.7778	-8E-04	6	0.449	1.0109	1.4441	352.5433
26	354	1.44	3.17	-2.15	354.039	0.4067	7	1.25765	127.2549	1.59568	0.5304	1.0653	330.84	0.4086	-9E-04	7	0.3809	0.9974	1.2613	332.2319
27	292.3	2.3	3.06	-2.11	292.337	0.7868	6	1.51764	130.2142	1.66079	0.5616	1.0992	264.45	0.7913	-0.001	6	0.4836	0.9818	1.5266	269.6998
28	294.1	1.37	2.78	-2.1	294.134	0.4658	6	1.35702	126.4382	1.72401	0.5928	1.1312	258.49	0.4685	-0.001	6	0.4255	0.972	1.37	268.6078
29	164.7	0.7	2.64	-2.13	164.732	0.4249	6	1.53372	120.111	1.78406	0.624	1.1601	140.46	0.4296	-0.003	6	0.4981	0.9552	1.5569	147.1028
30	184.7	0.41	2.74	-2.19	184.734	0.2219	6	1.35225	116.4765	1.8423	0.6552	1.1871	154.07	0.2242	-0.003	6	0.4311	0.9516	1.3776	164.4843
31	127.2	0.92	3.49	-2.33	127.243	0.723	6	1.75966	121.4809	1.90304	0.6864	1.2166	103.02	0.734	-0.003	6	0.5924	0.9206	1.7973	109.0533
32	71.5	1.82	3.41	-2.53	71.5417	2.544	5	2.30907	125.0682	1.96558	0.7176	1.248	55.751	2.6158	-0.007	5	0.8112	0.8747	2.3678	57.51585
33	70.1	1.67	5.96	-2.61	70.173	2.3798	5	2.29479	124.3918	2.02777	0.7488	1.279	53.281	2.4507	-0.005	5	0.8101	0.8576	2.3612	55.2339
34	31	1.49	5.66	-2.63	31.0693	4.7957	3	2.76081	121.5701	2.08856	0.78	1.3086	22.147	5.1414	-0.013	3	1	0.8086	2.8711	22.14707
35	56.6	1.88	5.92	-2.69	56.6725	3.3173	4	2.46211	124.7373	2.15093	0.8112	1.3397	40.696	3.4482	-0.007	4	0.8853	0.8115	2.5508	41.81293
36	37	1.77	5.84	-2.65	37.0715	4.7746	4	2.70434	123.2609	2.21256	0.8424	1.3702	25.442	5.0776	-0.012	3	0.9904	0.7742	2.8224	25.505
37	35.7	1.76	6.03	-2.59	35.7738	4.9198	3	2.7245	123.1326	2.27412	0.8736	1.4005	23.919	5.2538	-0.013	3	1	0.7555	2.8529	23.91941
38	36.2	1.51	6.99	-2.6	36.2856	4.1614	4	2.6695	122.0462	2.33515	0.9048	1.4304	23.736	4.4477	-0.012	3	0.9864	0.7428	2.8053	23.83306
39	99.9	2.29	7.56	-2.53	99.9925	2.2902	5	2.17479	127.5657	2.39893	0.936	1.4629	66.711	2.3465	-0.004	5	0.7831	0.7759	2.2668	71.56723
40	182.4	2.26	7.31	-2.45	182.489	1.2384	6	1.80129	128.9365	2.4634	0.9672	1.4962	120.32	1.2554	-0.002	6	0.6356	0.8024	1.8764	136.511
41	332.2	5.2	7.99	-2.53	332.298	1.5649	6	1.71682	136.4955	2.53165	0.9984	1.5333	215.08	1.5769	-0.001	6	0.5999	0.8005	1.778	249.4842
42	389.1	7.61	8.99	-2.55	389.21	1.9552	6	1.76113	137.28	2.60029	1.0296	1.5707	246.14	1.9684	-1E-03	6	0.6184	0.7833	1.8219	286.1883
43	457.5	8.1	9.57	-2.57	457.617	1.77	6	1.68836	137.28	2.66893	1.0608	1.6081	282.91	1.7804	-8E-04	6	0.5918	0.7806	1.7475	335.6177
44	425.2	5.53	9.82	-2.58	425.32	1.3002	6	1.59035	137.28	2.73757	1.092	1.6456	256.8	1.3086	-9E-04	6	0.5584	0.7815	1.655	312.1028
45	442.7	7.06	10.22	-2.61	442.825	1.5943	6	1.6563	137.28	2.80621	1.1232	1.683	261.45	1.6045	-9E-04	6	0.5863	0.7618	1.7237	316.7925
46	403.7	4.7	10.05	-2.58	403.823	1.1639	6	1.56291	136.2312	2.87432	1.1544	1.7199	233.12	1.1722	-0.001	6	0.5549	0.7637	1.6367	289.3934
47	307.5	3.08	9.4	-2.62	307.615	1.0013	6	1.58203	132.4751	2.94056	1.1856	1.755	173.61	1.0109	-0.002	6	0.5694	0.7497	1.6703	215.8678
48	395.9	4.98	10.13	-2.63	396.024	1.2575	6	1.59542	136.6071	3.00886	1.2168	1.7921	219.31	1.2671	-0.001	6	0.5738	0.7391	1.6774	274.5186
49	490.9	6.86	10.75	-2.6	491.032	1.3971	6	1.58408	137.28	3.0775	1.248	1.8295	266.71	1.4059	-1E-03	6	0.5692	0.7322	1.6606	337.6671
50	475.6	0	11.08	-2.59	475.736	0	0	0	120.9	3.13795	1.2792	1.8588	254.26	0	-0.001	0	1	0.5693	0	0

Presented below is a list of formulas used for the estimation of various soil properties. The formulas are presented in SI unit system and assume that all components are expressed in the same units.

:: Unit Weight, g (kN/m³) ::

$$g = g_w \cdot \left(0.27 \cdot \log(R_f) + 0.36 \cdot \log(\frac{q_t}{p_a}) + 1.236\right)$$

where g_w = water unit weight

:: Permeability, k (m/s) ::

$I_c < 3.27$ and $I_c > 1.00$ then $k = 10^{0.952-3.04 \cdot I_c}$

$I_c \leq 4.00$ and $I_c > 3.27$ then $k = 10^{-4.52-1.37 \cdot I_c}$

:: N_{SPT} (blows per 30 cm) ::

$$N_{60} = \left(\frac{q_c}{P_a}\right) \cdot \frac{1}{10^{1.1268-0.2817 \cdot I_c}}$$

$$N_{1(60)} = Q_{tn} \cdot \frac{1}{10^{1.1268-0.2817 \cdot I_c}}$$

:: Young's Modulus, Es (MPa) ::

$$(q_t - \sigma_v) \cdot 0.015 \cdot 10^{0.55 \cdot I_c + 1.68}$$

(applicable only to $I_c < I_{c_cutoff}$)

:: Relative Density, Dr (%) ::

$$100 \cdot \sqrt{\frac{Q_{tn}}{k_{DR}}}$$

(applicable only to SBT_n: 5, 6, 7 and 8 or $I_c < I_{c_cutoff}$)

:: State Parameter, ψ ::

$$\psi = 0.56 - 0.33 \cdot \log(Q_{tn,cs})$$

:: Peak drained friction angle, φ (°) ::

$$\varphi = 17.60 + 11 \cdot \log(Q_{tn})$$

(applicable only to SBT_n: 5, 6, 7 and 8)

:: 1-D constrained modulus, M (MPa) ::

If $I_c > 2.20$

$\alpha = 14$ for $Q_{tn} > 14$

$\alpha = Q_{tn}$ for $Q_{tn} \leq 14$

$M_{CPT} = \alpha \cdot (q_t - \sigma_v)$

If $I_c \leq 2.20$

$$M_{CPT} = (q_t - \sigma_v) \cdot 0.0188 \cdot 10^{0.55 \cdot I_c + 1.68}$$

:: Small strain shear Modulus, Go (MPa) ::

$$G_0 = (q_t - \sigma_v) \cdot 0.0188 \cdot 10^{0.55 \cdot I_c + 1.68}$$

:: Shear Wave Velocity, Vs (m/s) ::

$$V_s = \left(\frac{G_0}{\rho}\right)^{0.50}$$

:: Undrained peak shear strength, Su (kPa) ::

$N_{kt} = 10.50 + 7 \cdot \log(F_r)$ or user defined

$$S_u = \frac{(q_t - \sigma_v)}{N_{kt}}$$

(applicable only to SBT_n: 1, 2, 3, 4 and 9 or $I_c > I_{c_cutoff}$)

:: Remolded undrained shear strength, Su(rem) (kPa) ::

$S_{u(rem)} = f_s$ (applicable only to SBT_n: 1, 2, 3, 4 and 9 or $I_c > I_{c_cutoff}$)

:: Overconsolidation Ratio, OCR ::

$$k_{OCR} = \left[\frac{Q_{tn}^{0.20}}{0.25 \cdot (10.50 \cdot +7 \cdot \log(F_r))}\right]^{1.25}$$ or user defined

$OCR = k_{OCR} \cdot Q_{tn}$

(applicable only to SBT_n: 1, 2, 3, 4 and 9 or $I_c > I_{c_cutoff}$)

:: In situ Stress Ratio, Ko ::

$$K_O = (1 - \sin\varphi') \cdot OCR^{\sin\varphi'}$$

(applicable only to SBT_n: 1, 2, 3, 4 and 9 or $I_c > I_{c_cutoff}$)

:: Soil Sensitivity, S_t ::

$$S_t = \frac{N_S}{F_r}$$

(applicable only to SBT_n: 1, 2, 3, 4 and 9 or $I_c > I_{c_cutoff}$)

:: Effective Stress Friction Angle, φ' (°) ::

$$\varphi' = 29.5° \cdot B_q^{0.121} \cdot (0.256 + 0.336 \cdot B_q + \log Q_t)$$

(applicable for $0.10 < B_q < 1.00$)

References

- Robertson, P.K., Cabal K.L., Guide to Cone Penetration Testing for Geotechnical Engineering, Gregg Drilling & Testing, Inc., 5th Edition, November 2012
- Robertson, P.K., Interpretation of Cone Penetration Tests - a unified approach., Can. Geotech. J. 46(11): 1337–1355 (2009)

APPENDIX H

VERTICAL ANALYSIS

Figure 1

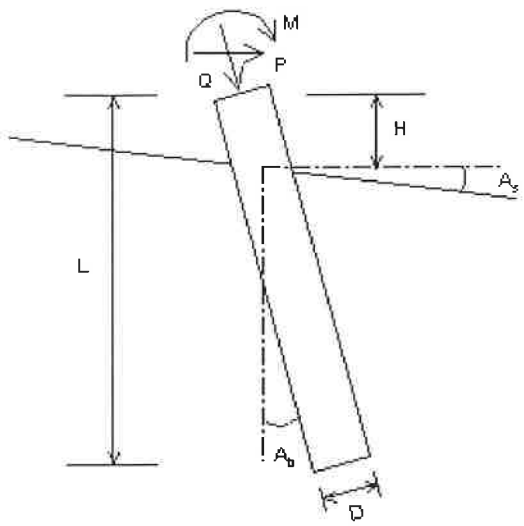

Driving Concrete Pile

Loads:
Load Factor for Vertical Loads= 1.0
Load Factor for Lateral Loads= 1.0
Loads Supported by Pile Cap= 0 %
Shear Condition: Static

(with Load Factor)
Vertical Load, Q= 29.0 -kp

Profile:
Pile Length, L= 40.0 -ft
Top Height, H= 0 -ft
Slope Angle, As= 0
Batter Angle, Ab= 0

* Zero Friction *
Zero Friction Start: 0 -ft End: 3.5 -ft
* Negative Friction *
Negative Friction Start: 3.5 -ft End: 32 -ft with Factor: 1

Soil Data:

Depth -ft	Gamma -lb/f3	Phi	C -kp/f2	K -lb/i3	e50 or Dr %	Nspt
0	120.0	0.0	0.500	276.5	0.92	9
3.5	126.9	28	0.250	231.7	0.98	8
8.5	108.0	0.0	0.350	44.2	1.74	3
12	48.4	0.0	0.350	41.5	1.81	3
19.5	46.7	30	0.00	17.4	23.30	6
24.5	57.9	34	0.00	57.7	49.28	17
35	61.2	36	0.00	105.5	69.49	34

Pile Data:

Depth -ft	Width -in	Area -in2	Per. -in	I -in4	E -kp/i2	Weight -kp/f
0.0	14	196.0	56.0	3201.3	3000	0.204
40.0						

Vertical Capacity:
Weight above Ground= 0.00 Total Weight= 5.78-kp *Soil Weight is not included
Side Resistance (Down)= -50.200-kp Side Resistance (Up)= 94.021-kp
Tip Resistance (Down)= 164.384-kp Tip Resistance (Up)= 0.000-kp
Total Ultimate Capacity (Down) Qult= 114.184-kp Total Ultimate Capacity (Up)= 99.805-kp
Total Allowable Capacity (Down) Qallow= 29.695-kp Total Allowable Capacity (Up) Qallow= 52.794-kp
OK! Qallow > Q

Settlement Calculation:
At Q= 29.00-kp Settlement= 0.14930-in
At Xallow= 1.00-in Q= 99999.00000-kp

Note: If the program cannot find a result or the result exceeds the upper limit. The result will be displayed as 99999.

ALLOWABLE CAPACITY vs FOUNDATION DEPTH

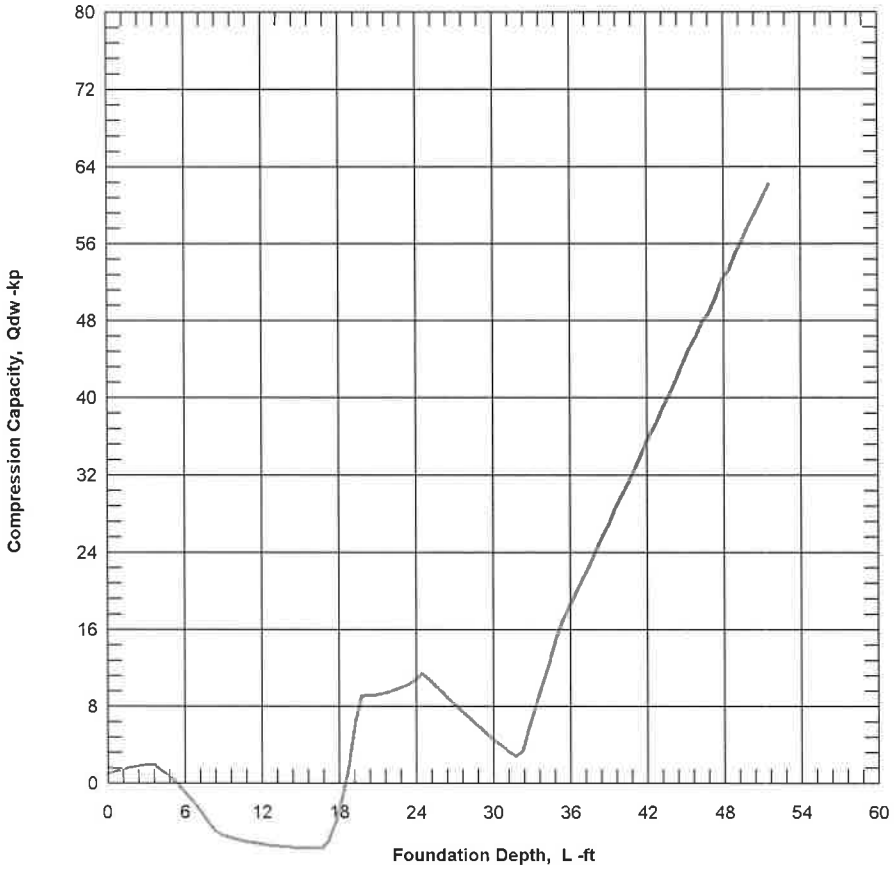

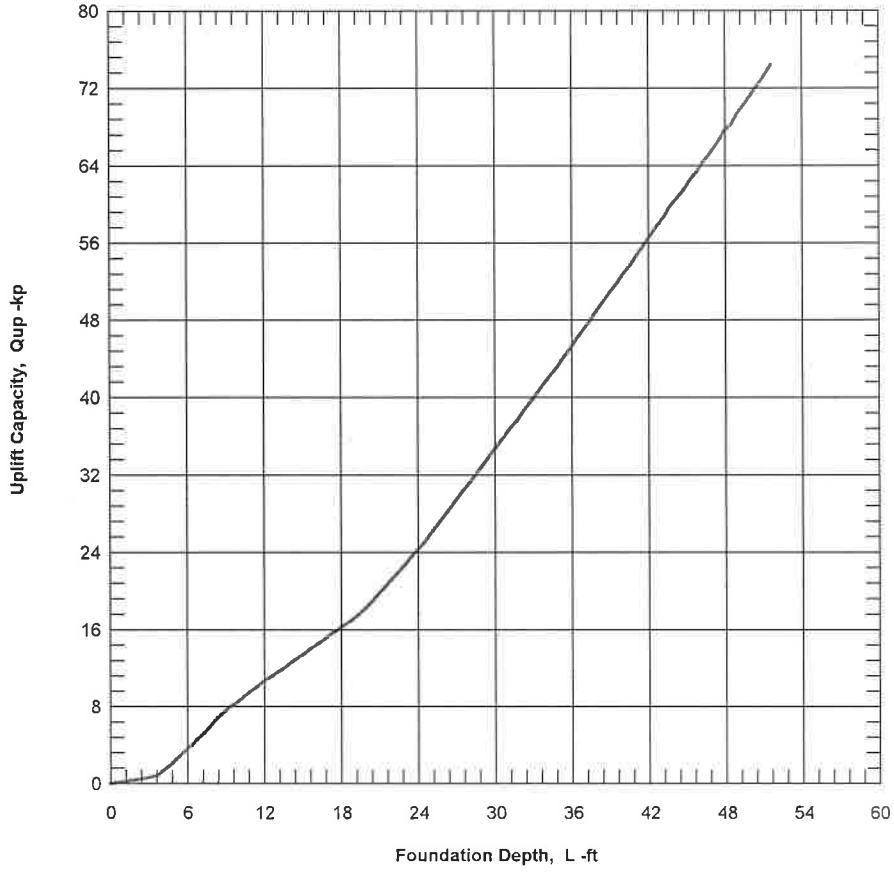

CivilTech Software

16G136 - 14-in square Driven Conc. Pile
40-ft-deep; Using B-1 data

Figure 1

```
*************************************************************
                    ALLPILE 7
      VERTICAL ANALYSIS DETAILED OUTPUT
       Copyright by CivilTech Software
              www.civiltech.com
*************************************************************
Licensed to
Date: 7/8/2019  File: P:\Geotechnical\2016 Geotechnical\16G136 Alston 2 CI Bldgs Long Beach\Deep Foundation Design\Apr 28 2016\Boring B-1\14in_driven_pile_40ftdeep_01.alp          1.0

Title 1: 16G136 - 14-in square Driven Conc. Pile
Title 2: 40-ft-deep; Using B-1 data

ALLPILE INPUT DATA:
**_____________________________________________**

* Pile Type Page *
Unit: English
Displacement pile: Higher friction. Stinger helps smoothen driving.  Pile has two sections.  H-section on tip.
Pile Type: Driving Concrete Pile

* Pile Profile *
Foundation Depth: 40.0 -ft
Top Height: 0 -ft
Slope Angle: 0
Pile Angle: 0

* Pile Properties *
Zs      Width   Area    Perim.    I       E       Weight  Mix     Out     In      Other.  Type
-ft     -in     -in2    -in       -in4    -kp/i2  -kp/f   %       Side    Side    Par.
_____________________________________________________________________________________________
0.0     14      196.0   56.0    3201.3  3000    0.204   0.0     4       4       0       Concrete (smooth)
40.0                                                                                     Pile Tip
Note:  Mix = % of Inside material/Outside material

Group Type: 0
Top Type: 1

Water Table: 12 -ft
Ground Elevation: 0 -ft

* Soil Properties *
Zs      Gamma   Phi     C       K       E50/Dr  Nspt    Type    Soil
-ft     -lb/f3  o       -kp/f2  -lb/i3   - %
0.0     120.0   0.0     0.500   276.5   0.92    9       1       Fill
3.5     126.9   28      0.250   231.7   0.98    8       3       Alluvium
8.5     108.0   0.0     0.350   44.2    1.74    3       1       Alluvium
12.0    48.4    0.0     0.350   41.5    1.81    3       1       Alluvium
19.5    46.7    30      0.00    17.4    23.30   6       4       Alluvium
24.5    57.9    34      0.00    57.7    49.28   17      4       Alluvium
35.0    61.2    36      0.00    105.5   69.49   34      4       Alluvium

Surcharge Pressure on ground: 0 -kp/f2

* Zero Friction *
Zero Friction Start: 0 -ft      End: 3.5 -ft

* Negative Friction *
Negative Friction Start: 3.5 -ft        End: 32 -ft     with Factor: 1

ALLPILE ANALYSIS AND RESULTS:
**_____________________________________________**

Pile Profile and Loading:
        Piletype: Driving Concrete Pile
        Pile Length, L= 40.0 -ft
        Top Height, H= 0 -ft
        Slope Angle, As= 0
        Batter Angle, Ab= 0.00

        *To consider the influence of different soils below the pile tip, bearing stratum is defined
        from pile tip extending to 10 Diameter of pile, which is 11.7-ft (Input Page F, Item 3)

Single Pile, Vertical Analysis:
        Vertical Load with Load factor, Q= 29.0 -kp
        Vertical Load with Load factor and Pile Cap, Q= 29.0 -kp
          Load Factor for Vertical Loads= 1.0
          Vertical Loads Supported by Pile Cap: 0 %
          Kdown= 1.3      Kup= 0.8        Ka= 1.00


From Ztip=40.0 to 51.7-ft  Average Properties: Es= 543.94-kp/f2  C=0.00-kp/f2  Friction=36.00 Cp=0.03  Ksand=1.00
Limits of Max. tip resistance, q_lim= N/A
Batter Angle, Ab= 0.00    Batter Factor, Kbat= 1.00
Qtip_dw=164.4-kp  based on qult=120.8-kp/f2  and Base Area=1.4-ft2
Qtip_up=0.0-kp  and Base Area=0.0-ft2


TIP RESISTANCE (Down) CALCULATION:
Tip Depth= 40.0-ft Critical Depth Ratio Z/D= 20 Critical Depth= 23.3-ft
Equivalent Width of Tip= 1.17-ft,    Tip Area= 1.36-ft2   Tip Diameter= 1.17-ft
Bearing stratum from pile tip extending to 10 Diameter of pile. Bearing stratum= 11.67-ft
Btip: width at pile tip= 1.17-ft (For group pile, it is equivalent width).
Phi & C are average value in bearing stratum.
Batter Angle= 0.00,    Batter Factor for Tip and Side= 1.00

Ztip    Z/D     Z_lim   q_lim   Width   Area'   Phi     C       Nq      Nc      Sv      qult    Qtip_dw
-ft             -ft     -kp/f2  -ft     -ft2    - o     -kp/f2                  -kp/f2  -kp/f2  -kp
_____________________________________________________________________________________________________
40.0    20.0    23.3    N/A     1.17    1.36    36.0    0.00    60.9    9.0     2.0     120.8   164.4

 Ztip - Depth of pile tip from ground surface (Zs)
 D - Pile average diameter (below ground) for calculation of critical depth.  D=1.17-ft
 Z/D - Critical depth (for tip resistances) as ratio of depth/diameter. Vertical stress will be constant below critical depth
 Z_lim - Critical depth, calculated from Z/D (for tip resistances)
 q_lim -  Limit of Maximum tip resistance
 Btip: width or diameter at pile tip
 Bearing stratum: A stratum from  pile tip extending to some depth. Average soil properties in the stratum are used for bearing calculation


SIDE RESISTANCE (Uplift & Down) CALCULATION:
D       Z/D     Z_lim   Sf_lim  K_dw    K_up    dz
-ft             -ft     -kp/f2                  -ft
_____________________________________________
1.17    20.0    23.33   N/A     1.3     0.8     0.080

 D - Pile average diameter for calculation of critical depth
 Z/D - Critical depth (for side resistances) as ratio of depth/diameter.  Vertical stress will be constant below critical depth
```

Z_lim - Critical depth calculated from Z/D (for side resistances)
Sf_lim - Limit of Maximum side resistance

Users Setting: Ka=1, which is constant. Ca=KcKaC=KcC

SIDE RESISTANCE (Up & Down) CALCULATION vs DEPTH:
Calculation is based on segment dZ= 0.08

Zs -ft	Prem -ft	Sv -kp/f2	Phi - o	Kf(<2) Delta	Delta - o	f_dw -kp/f2	f_up -kp/f2	C -kp/f2	Ka	Kc(<2) Ca	Ca_dw -kp/f2	Ca_up -kp/f2	Sf_dw -kp/f2	Sf_up -kp/f2	Weight -kp	Qneg -kp	Q_dw -kp	Q_up -kp	Torsion -kp-f
40.00	4.67	1.98	36.0	0.70	25.2	1.21	0.75	0.00	1.00	1.00	0.00	0.00	0.00	0.00	0.00	0.00	164.4	0.0	0.0
39.92	4.67	1.98	36.0	0.70	25.2	1.21	0.75	0.00	1.00	1.00	0.00	0.00	1.21	0.75	0.01	0.00	164.8	0.3	0.3
39.84	4.67	1.98	36.0	0.70	25.2	1.21	0.75	0.00	1.00	1.00	0.00	0.00	1.21	0.75	0.02	0.00	165.3	0.6	0.5
39.76	4.67	1.98	36.0	0.70	25.2	1.21	0.75	0.00	1.00	1.00	0.00	0.00	1.21	0.75	0.03	0.00	165.7	0.9	0.8
39.68	4.67	1.98	36.0	0.70	25.2	1.21	0.75	0.00	1.00	1.00	0.00	0.00	1.21	0.75	0.04	0.00	166.2	1.2	1.1
39.60	4.67	1.98	36.0	0.70	25.2	1.21	0.75	0.00	1.00	1.00	0.00	0.00	1.21	0.75	0.05	0.00	166.7	1.4	1.4
39.52	4.67	1.98	36.0	0.70	25.2	1.21	0.75	0.00	1.00	1.00	0.00	0.00	1.21	0.75	0.06	0.00	167.1	1.7	1.6
39.44	4.67	1.98	36.0	0.70	25.2	1.21	0.75	0.00	1.00	1.00	0.00	0.00	1.21	0.75	0.07	0.00	167.6	2.0	1.9
39.36	4.67	1.98	36.0	0.70	25.2	1.21	0.75	0.00	1.00	1.00	0.00	0.00	1.21	0.75	0.08	0.00	168.0	2.3	2.2
39.28	4.67	1.98	36.0	0.70	25.2	1.21	0.75	0.00	1.00	1.00	0.00	0.00	1.21	0.75	0.09	0.00	168.5	2.6	2.4
39.20	4.67	1.98	36.0	0.70	25.2	1.21	0.75	0.00	1.00	1.00	0.00	0.00	1.21	0.75	0.10	0.00	168.9	2.9	2.7
39.12	4.67	1.98	36.0	0.70	25.2	1.21	0.75	0.00	1.00	1.00	0.00	0.00	1.21	0.75	0.10	0.00	169.4	3.2	3.0
39.04	4.67	1.98	36.0	0.70	25.2	1.21	0.75	0.00	1.00	1.00	0.00	0.00	1.21	0.75	0.11	0.00	169.8	3.5	3.3
38.96	4.67	1.98	36.0	0.70	25.2	1.21	0.75	0.00	1.00	1.00	0.00	0.00	1.21	0.75	0.12	0.00	170.3	3.8	3.5
38.88	4.67	1.98	36.0	0.70	25.2	1.21	0.75	0.00	1.00	1.00	0.00	0.00	1.21	0.75	0.13	0.00	170.7	4.0	3.8
38.80	4.67	1.98	36.0	0.70	25.2	1.21	0.75	0.00	1.00	1.00	0.00	0.00	1.21	0.75	0.14	0.00	171.2	4.3	4.1
38.72	4.67	1.98	36.0	0.70	25.2	1.21	0.75	0.00	1.00	1.00	0.00	0.00	1.21	0.75	0.15	0.00	171.6	4.6	4.4
38.64	4.67	1.98	36.0	0.70	25.2	1.21	0.75	0.00	1.00	1.00	0.00	0.00	1.21	0.75	0.16	0.00	172.1	4.9	4.6
38.56	4.67	1.98	36.0	0.70	25.2	1.21	0.75	0.00	1.00	1.00	0.00	0.00	1.21	0.75	0.17	0.00	172.5	5.2	4.9
38.48	4.67	1.98	36.0	0.70	25.2	1.21	0.75	0.00	1.00	1.00	0.00	0.00	1.21	0.75	0.18	0.00	173.0	5.5	5.2
38.40	4.67	1.98	36.0	0.70	25.2	1.21	0.75	0.00	1.00	1.00	0.00	0.00	1.21	0.75	0.19	0.00	173.5	5.8	5.4
38.32	4.67	1.98	36.0	0.70	25.2	1.21	0.75	0.00	1.00	1.00	0.00	0.00	1.21	0.75	0.20	0.00	173.9	6.1	5.7
38.24	4.67	1.98	36.0	0.70	25.2	1.21	0.75	0.00	1.00	1.00	0.00	0.00	1.21	0.75	0.21	0.00	174.4	6.3	6.0
38.16	4.67	1.98	36.0	0.70	25.2	1.21	0.75	0.00	1.00	1.00	0.00	0.00	1.21	0.75	0.22	0.00	174.8	6.6	6.3
38.08	4.67	1.98	36.0	0.70	25.2	1.21	0.75	0.00	1.00	1.00	0.00	0.00	1.21	0.75	0.23	0.00	175.3	6.9	6.5
38.00	4.67	1.98	36.0	0.70	25.2	1.21	0.75	0.00	1.00	1.00	0.00	0.00	1.21	0.75	0.24	0.00	175.7	7.2	6.8
37.92	4.67	1.98	36.0	0.70	25.2	1.21	0.75	0.00	1.00	1.00	0.00	0.00	1.21	0.75	0.25	0.00	176.2	7.5	7.1
37.84	4.67	1.98	36.0	0.70	25.2	1.21	0.75	0.00	1.00	1.00	0.00	0.00	1.21	0.75	0.26	0.00	176.6	7.8	7.3
37.76	4.67	1.98	36.0	0.70	25.2	1.21	0.75	0.00	1.00	1.00	0.00	0.00	1.21	0.75	0.27	0.00	177.1	8.1	7.6
37.68	4.67	1.98	36.0	0.70	25.2	1.21	0.75	0.00	1.00	1.00	0.00	0.00	1.21	0.75	0.28	0.00	177.5	8.4	7.9
37.60	4.67	1.98	36.0	0.70	25.2	1.21	0.75	0.00	1.00	1.00	0.00	0.00	1.21	0.75	0.29	0.00	178.0	8.7	8.2
37.52	4.67	1.98	36.0	0.70	25.2	1.21	0.75	0.00	1.00	1.00	0.00	0.00	1.21	0.75	0.30	0.00	178.4	8.9	8.4
37.43	4.67	1.98	36.0	0.70	25.2	1.21	0.75	0.00	1.00	1.00	0.00	0.00	1.21	0.75	0.31	0.00	178.9	9.2	8.7
37.35	4.67	1.98	36.0	0.70	25.2	1.21	0.75	0.00	1.00	1.00	0.00	0.00	1.21	0.75	0.31	0.00	179.4	9.5	9.0
37.27	4.67	1.98	36.0	0.70	25.2	1.21	0.75	0.00	1.00	1.00	0.00	0.00	1.21	0.75	0.32	0.00	179.8	9.8	9.3
37.19	4.67	1.98	36.0	0.70	25.2	1.21	0.75	0.00	1.00	1.00	0.00	0.00	1.21	0.75	0.33	0.00	180.3	10.1	9.5
37.11	4.67	1.98	36.0	0.70	25.2	1.21	0.75	0.00	1.00	1.00	0.00	0.00	1.21	0.75	0.34	0.00	180.7	10.4	9.8
37.03	4.67	1.98	36.0	0.70	25.2	1.21	0.75	0.00	1.00	1.00	0.00	0.00	1.21	0.75	0.35	0.00	181.2	10.7	10.1
36.95	4.67	1.98	36.0	0.70	25.2	1.21	0.75	0.00	1.00	1.00	0.00	0.00	1.21	0.75	0.36	0.00	181.6	11.0	10.3
36.87	4.67	1.98	36.0	0.70	25.2	1.21	0.75	0.00	1.00	1.00	0.00	0.00	1.21	0.75	0.37	0.00	182.1	11.3	10.6
36.79	4.67	1.98	36.0	0.70	25.2	1.21	0.75	0.00	1.00	1.00	0.00	0.00	1.21	0.75	0.38	0.00	182.5	11.5	10.9
36.71	4.67	1.98	36.0	0.70	25.2	1.21	0.75	0.00	1.00	1.00	0.00	0.00	1.21	0.75	0.39	0.00	183.0	11.8	11.2
36.63	4.67	1.98	36.0	0.70	25.2	1.21	0.75	0.00	1.00	1.00	0.00	0.00	1.21	0.75	0.40	0.00	183.4	12.1	11.4
36.55	4.67	1.98	36.0	0.70	25.2	1.21	0.75	0.00	1.00	1.00	0.00	0.00	1.21	0.75	0.41	0.00	183.9	12.4	11.7
36.47	4.67	1.98	36.0	0.70	25.2	1.21	0.75	0.00	1.00	1.00	0.00	0.00	1.21	0.75	0.42	0.00	184.3	12.7	12.0
36.39	4.67	1.98	36.0	0.70	25.2	1.21	0.75	0.00	1.00	1.00	0.00	0.00	1.21	0.75	0.43	0.00	184.8	13.0	12.2
36.31	4.67	1.98	36.0	0.70	25.2	1.21	0.75	0.00	1.00	1.00	0.00	0.00	1.21	0.75	0.44	0.00	185.2	13.3	12.5
36.23	4.67	1.98	36.0	0.70	25.2	1.21	0.75	0.00	1.00	1.00	0.00	0.00	1.21	0.75	0.45	0.00	185.7	13.6	12.8
36.15	4.67	1.98	36.0	0.70	25.2	1.21	0.75	0.00	1.00	1.00	0.00	0.00	1.21	0.75	0.46	0.00	186.2	13.9	13.1
36.07	4.67	1.98	36.0	0.70	25.2	1.21	0.75	0.00	1.00	1.00	0.00	0.00	1.21	0.75	0.47	0.00	186.6	14.1	13.3
35.99	4.67	1.98	36.0	0.70	25.2	1.21	0.75	0.00	1.00	1.00	0.00	0.00	1.21	0.75	0.48	0.00	187.1	14.4	13.6
35.91	4.67	1.98	36.0	0.70	25.2	1.21	0.75	0.00	1.00	1.00	0.00	0.00	1.21	0.75	0.49	0.00	187.5	14.7	13.9
35.83	4.67	1.98	36.0	0.70	25.2	1.21	0.75	0.00	1.00	1.00	0.00	0.00	1.21	0.75	0.50	0.00	188.0	15.0	14.1
35.75	4.67	1.98	36.0	0.70	25.2	1.21	0.75	0.00	1.00	1.00	0.00	0.00	1.21	0.75	0.51	0.00	188.4	15.3	14.4
35.67	4.67	1.98	36.0	0.70	25.2	1.21	0.75	0.00	1.00	1.00	0.00	0.00	1.21	0.75	0.52	0.00	188.9	15.6	14.7
35.59	4.67	1.98	36.0	0.70	25.2	1.21	0.75	0.00	1.00	1.00	0.00	0.00	1.21	0.75	0.52	0.00	189.3	15.9	15.0
35.51	4.67	1.98	36.0	0.70	25.2	1.21	0.75	0.00	1.00	1.00	0.00	0.00	1.21	0.75	0.53	0.00	189.8	16.2	15.2
35.43	4.67	1.98	36.0	0.70	25.2	1.21	0.75	0.00	1.00	1.00	0.00	0.00	1.21	0.75	0.54	0.00	190.2	16.5	15.5
35.35	4.67	1.98	36.0	0.70	25.2	1.21	0.75	0.00	1.00	1.00	0.00	0.00	1.21	0.75	0.55	0.00	190.7	16.7	15.8
35.27	4.67	1.98	36.0	0.70	25.2	1.21	0.75	0.00	1.00	1.00	0.00	0.00	1.21	0.75	0.56	0.00	191.1	17.0	16.1
35.19	4.67	1.98	36.0	0.70	25.2	1.21	0.75	0.00	1.00	1.00	0.00	0.00	1.21	0.75	0.57	0.00	191.6	17.3	16.3
35.11	4.67	1.98	36.0	0.70	25.2	1.21	0.75	0.00	1.00	1.00	0.00	0.00	1.21	0.75	0.58	0.00	192.0	17.6	16.6
35.03	4.67	1.98	36.0	0.70	25.2	1.21	0.75	0.00	1.00	1.00	0.00	0.00	1.21	0.75	0.59	0.00	192.5	17.9	16.9
34.95	4.67	1.98	34.0	0.70	23.8	1.14	0.70	0.00	1.00	1.00	0.00	0.00	1.14	0.70	0.60	0.00	192.9	18.2	17.1
34.87	4.67	1.98	34.0	0.70	23.8	1.14	0.70	0.00	1.00	1.00	0.00	0.00	1.14	0.70	0.61	0.00	193.4	18.4	17.4
34.79	4.67	1.98	34.0	0.70	23.8	1.14	0.70	0.00	1.00	1.00	0.00	0.00	1.14	0.70	0.62	0.00	193.8	18.7	17.6
34.71	4.67	1.98	34.0	0.70	23.8	1.14	0.70	0.00	1.00	1.00	0.00	0.00	1.14	0.70	0.63	0.00	194.2	19.0	17.9
34.63	4.67	1.98	34.0	0.70	23.8	1.14	0.70	0.00	1.00	1.00	0.00	0.00	1.14	0.70	0.64	0.00	194.6	19.3	18.1
34.55	4.67	1.98	34.0	0.70	23.8	1.14	0.70	0.00	1.00	1.00	0.00	0.00	1.14	0.70	0.65	0.00	195.1	19.5	18.4
34.47	4.67	1.98	34.0	0.70	23.8	1.14	0.70	0.00	1.00	1.00	0.00	0.00	1.14	0.70	0.66	0.00	195.5	19.8	18.7
34.39	4.67	1.98	34.0	0.70	23.8	1.14	0.70	0.00	1.00	1.00	0.00	0.00	1.14	0.70	0.67	0.00	195.9	20.1	18.9
34.31	4.67	1.98	34.0	0.70	23.8	1.14	0.70	0.00	1.00	1.00	0.00	0.00	1.14	0.70	0.68	0.00	196.3	20.3	19.2
34.23	4.67	1.98	34.0	0.70	23.8	1.14	0.70	0.00	1.00	1.00	0.00	0.00	1.14	0.70	0.69	0.00	196.8	20.6	19.4
34.15	4.67	1.98	34.0	0.70	23.8	1.14	0.70	0.00	1.00	1.00	0.00	0.00	1.14	0.70	0.70	0.00	197.2	20.9	19.7
34.07	4.67	1.98	34.0	0.70	23.8	1.14	0.70	0.00	1.00	1.00	0.00	0.00	1.14	0.70	0.71	0.00	197.6	21.1	19.9
33.99	4.67	1.98	34.0	0.70	23.8	1.14	0.70	0.00	1.00	1.00	0.00	0.00	1.14	0.70	0.72	0.00	198.0	21.4	20.2
33.91	4.67	1.98	34.0	0.70	23.8	1.14	0.70	0.00	1.00	1.00	0.00	0.00	1.14	0.70	0.73	0.00	198.5	21.7	20.4
33.83	4.67	1.98	34.0	0.70	23.8	1.14	0.70	0.00	1.00	1.00	0.00	0.00	1.14	0.70	0.73	0.00	198.9	22.0	20.7
33.75	4.67	1.98	34.0	0.70	23.8	1.14	0.70	0.00	1.00	1.00	0.00	0.00	1.14	0.70	0.74	0.00	199.3	22.2	20.9
33.67	4.67	1.98	34.0	0.70	23.8	1.14	0.70	0.00	1.00	1.00	0.00	0.00	1.14	0.70	0.75	0.00	199.7	22.5	21.2
33.59	4.67	1.98	34.0	0.70	23.8	1.14	0.70	0.00	1.00	1.00	0.00	0.00	1.14	0.70	0.76	0.00	200.2	22.8	21.5
33.51	4.67	1.98	34.0	0.70	23.8	1.14	0.70	0.00	1.00	1.00	0.00	0.00	1.14	0.70	0.77	0.00	200.6	23.0	21.7
33.43	4.67	1.98	34.0	0.70	23.8	1.14	0.70	0.00	1.00	1.00	0.00	0.00	1.14	0.70	0.78	0.00	201.0	23.3	22.0
33.35	4.67	1.98	34.0	0.70	23.8	1.14	0.70	0.00	1.00	1.00	0.00	0.00	1.14	0.70	0.79	0.00	201.4	23.6	22.2
33.27	4.67	1.98	34.0	0.70	23.8	1.14	0.70	0.00	1.00	1.00	0.00	0.00	1.14	0.70	0.80	0.00	201.9	23.9	22.5
33.19	4.67	1.98	34.0	0.70	23.8	1.14	0.70	0.00	1.00	1.00	0.00	0.00	1.14	0.70	0.81	0.00	202.3	24.1	22.7
33.11	4.67	1.98	34.0	0.70	23.8	1.14	0.70	0.00	1.00	1.00	0.00	0.00	1.14	0.70	0.82	0.00	202.7	24.4	23.0
33.03	4.67	1.98	34.0	0.70	23.8	1.14	0.70	0.00	1.00	1.00	0.00	0.00	1.14	0.70	0.83	0.00	203.1	24.7	23.2
32.95	4.67	1.98	34.0	0.70	23.8	1.14	0.70	0.00	1.00	1.00	0.00	0.00	1.14	0.70	0.84	0.00	203.6	24.9	23.5
32.87	4.67	1.98	34.0	0.70	23.8	1.14	0.70	0.00	1.00	1.00	0.00	0.00	1.14	0.70	0.85	0.00	204.0	25.2	23.8
32.79	4.67	1.98	34.0	0.70	23.8	1.14	0.70	0.00	1.00	1.00	0.00	0.00	1.14	0.70	0.86	0.00	204.4	25.5	24.0
32.71	4.67	1.98	34.0	0.70	23.8	1.14	0.70	0.00	1.00	1.00	0.00	0.00	1.14	0.70	0.87	0.00	204.8	25.8	24.3
32.63	4.67	1.98	34.0	0.70	23.8	1.14	0.70	0.00	1.00	1.00	0.00	0.00	1.14	0.70	0.88	0.00	205.3	26.0	24.5
32.55	4.67	1.98	34.0	0.70	23.8	1.14	0.70	0.00	1.00	1.00	0.00	0.00	1.14	0.70	0.89	0.00	205.7	26.3	24.8
32.46	4.67	1.98	34.0	0.70	23.8	1.14	0.70	0.00	1.00	1.00	0.00	0.00	1.14	0.70	0.90	0.00	206.1	26.6	25.0
32.38	4.67	1.98	34.0	0.70	23.8	1.14	0.70	0.00	1.00	1.00	0.00	0.00	1.14	0.70	0.91	0.00	206.5	26.8	25.3
32.30	4.67	1.98	34.0	0.70	23.8	1.14	0.70	0.00	1.00	1.00	0.00	0.00	1.14	0.70	0.92	0.00	207.0	27.1	25.5
32.22	4.67	1.98	34.0	0.70	23.8	1.14	0.70	0.00	1.00	1.00	0.00	0.00	1.14	0.70	0.93	0.00	207.4	27.4	25.8
32.14	4.67	1.98	34.0	0.70	23.8	1.14	0.70	0.00	1.00	1.00	0.00	0.00	1.14	0.70	0.94	0.00	207.8	27.7	26.0
32.06	4.67	1.98	34.0	0.70	23.8	1.14	0.70	0.00	1.00	1.00	0.00	0.00	1.14	0.70	0.94	0.00	208.2	27.9	26.3
31.98	4.67	1.98	34.0	0.70	23.8	-1.14	0.70	0.00	1.00	1.00	0.00	0.00	-1.14	0.70	0.95	-0.43	207.8	28.2	26.2
31.90	4.67	1.98	34.0	0.70	23.8	-1.14	0.70	0.00	1.00	1.00	0.00	0.00	-1.14	0.70	0.96	-0.85	207.4	28.5	26.2
31.82	4.67	1.98	34.0	0.70	23.8	-1.14	0.70	0.00	1.00	1.00	0.00	0.00	-1.14	0.70	0.97	-1.28	207.0	28.7	26.1
31.74	4.67	1.98	34.0	0.70	23.8	-1.14	0.70	0.00	1.00	1.00	0.00	0.00	-1.14	0.70	0.98	-1.70	206.5	29.0	26.1
31.66	4.67	1.98	34.0	0.70	23.8	-1.14	0.70	0.00	1.00	1.00	0.00	0.00	-1.14	0.70	0.99	-2.13	206.1	29.3	26.0
31.58	4.67	1.98	34.0	0.70	23.8	-1.14	0.70	0.00	1.00	1.00	0.00	0.00	-1.14	0.70	1.00	-2.55	205.7	29.6	25.9

31.50	4.67	1.98	34.0	0.70	23.8	-1.14	0.70	0.00	1.00	1.00	0.00	0.00	-1.14	0.70	1.01	-2.98	205.3	29.8	25.9
31.42	4.67	1.98	34.0	0.70	23.8	-1.14	0.70	0.00	1.00	1.00	0.00	0.00	-1.14	0.70	1.02	-3.40	204.8	30.1	25.8
31.34	4.67	1.98	34.0	0.70	23.8	-1.14	0.70	0.00	1.00	1.00	0.00	0.00	-1.14	0.70	1.03	-3.83	204.4	30.4	25.8
31.26	4.67	1.98	34.0	0.70	23.8	-1.14	0.70	0.00	1.00	1.00	0.00	0.00	-1.14	0.70	1.04	-4.25	204.0	30.6	25.7
31.18	4.67	1.98	34.0	0.70	23.8	-1.14	0.70	0.00	1.00	1.00	0.00	0.00	-1.14	0.70	1.05	-4.68	203.6	30.9	25.6
31.10	4.67	1.98	34.0	0.70	23.8	-1.14	0.70	0.00	1.00	1.00	0.00	0.00	-1.14	0.70	1.06	-5.10	203.1	31.2	25.6
31.02	4.67	1.98	34.0	0.70	23.8	-1.14	0.70	0.00	1.00	1.00	0.00	0.00	-1.14	0.70	1.07	-5.53	202.7	31.5	25.5
30.94	4.67	1.98	34.0	0.70	23.8	-1.14	0.70	0.00	1.00	1.00	0.00	0.00	-1.14	0.70	1.08	-5.95	202.3	31.7	25.5
30.86	4.67	1.98	34.0	0.70	23.8	-1.14	0.70	0.00	1.00	1.00	0.00	0.00	-1.14	0.70	1.09	-6.38	201.9	32.0	25.4
30.78	4.67	1.98	34.0	0.70	23.8	-1.14	0.70	0.00	1.00	1.00	0.00	0.00	-1.14	0.70	1.10	-6.80	201.4	32.3	25.3
30.70	4.67	1.98	34.0	0.70	23.8	-1.14	0.70	0.00	1.00	1.00	0.00	0.00	-1.14	0.70	1.11	-7.23	201.0	32.5	25.3
30.62	4.67	1.98	34.0	0.70	23.8	-1.14	0.70	0.00	1.00	1.00	0.00	0.00	-1.14	0.70	1.12	-7.65	200.6	32.8	25.2
30.54	4.67	1.98	34.0	0.70	23.8	-1.14	0.70	0.00	1.00	1.00	0.00	0.00	-1.14	0.70	1.13	-8.08	200.2	33.1	25.1
30.46	4.67	1.98	34.0	0.70	23.8	-1.14	0.70	0.00	1.00	1.00	0.00	0.00	-1.14	0.70	1.14	-8.50	199.7	33.3	25.1
30.38	4.67	1.98	34.0	0.70	23.8	-1.14	0.70	0.00	1.00	1.00	0.00	0.00	-1.14	0.70	1.15	-8.93	199.3	33.6	25.0
30.30	4.67	1.98	34.0	0.70	23.8	-1.14	0.70	0.00	1.00	1.00	0.00	0.00	-1.14	0.70	1.15	-9.35	198.9	33.9	25.0
30.22	4.67	1.98	34.0	0.70	23.8	-1.14	0.70	0.00	1.00	1.00	0.00	0.00	-1.14	0.70	1.16	-9.78	198.5	34.2	24.9
30.14	4.67	1.98	34.0	0.70	23.8	-1.14	0.70	0.00	1.00	1.00	0.00	0.00	-1.14	0.70	1.17	-10.20	198.0	34.4	24.8
30.06	4.67	1.98	34.0	0.70	23.8	-1.14	0.70	0.00	1.00	1.00	0.00	0.00	-1.14	0.70	1.18	-10.63	197.6	34.7	24.8
29.98	4.67	1.98	34.0	0.70	23.8	-1.14	0.70	0.00	1.00	1.00	0.00	0.00	-1.14	0.70	1.19	-11.05	197.2	35.0	24.7
29.90	4.67	1.98	34.0	0.70	23.8	-1.14	0.70	0.00	1.00	1.00	0.00	0.00	-1.14	0.70	1.20	-11.48	196.8	35.2	24.7
29.82	4.67	1.98	34.0	0.70	23.8	-1.14	0.70	0.00	1.00	1.00	0.00	0.00	-1.14	0.70	1.21	-11.90	196.3	35.5	24.6
29.74	4.67	1.98	34.0	0.70	23.8	-1.14	0.70	0.00	1.00	1.00	0.00	0.00	-1.14	0.70	1.22	-12.33	195.9	35.8	24.5
29.66	4.67	1.98	34.0	0.70	23.8	-1.14	0.70	0.00	1.00	1.00	0.00	0.00	-1.14	0.70	1.23	-12.75	195.5	36.1	24.5
29.58	4.67	1.98	34.0	0.70	23.8	-1.14	0.70	0.00	1.00	1.00	0.00	0.00	-1.14	0.70	1.24	-13.18	195.1	36.3	24.4
29.50	4.67	1.98	34.0	0.70	23.8	-1.14	0.70	0.00	1.00	1.00	0.00	0.00	-1.14	0.70	1.25	-13.60	194.6	36.6	24.4
29.42	4.67	1.98	34.0	0.70	23.8	-1.14	0.70	0.00	1.00	1.00	0.00	0.00	-1.14	0.70	1.26	-14.03	194.2	36.9	24.3
29.34	4.67	1.98	34.0	0.70	23.8	-1.14	0.70	0.00	1.00	1.00	0.00	0.00	-1.14	0.70	1.27	-14.45	193.8	37.1	24.2
29.26	4.67	1.98	34.0	0.70	23.8	-1.14	0.70	0.00	1.00	1.00	0.00	0.00	-1.14	0.70	1.28	-14.88	193.4	37.4	24.2
29.18	4.67	1.98	34.0	0.70	23.8	-1.14	0.70	0.00	1.00	1.00	0.00	0.00	-1.14	0.70	1.29	-15.30	192.9	37.7	24.1
29.10	4.67	1.98	34.0	0.70	23.8	-1.14	0.70	0.00	1.00	1.00	0.00	0.00	-1.14	0.70	1.30	-15.73	192.5	38.0	24.1
29.02	4.67	1.98	34.0	0.70	23.8	-1.14	0.70	0.00	1.00	1.00	0.00	0.00	-1.14	0.70	1.31	-16.15	192.1	38.2	24.0
28.94	4.67	1.98	34.0	0.70	23.8	-1.14	0.70	0.00	1.00	1.00	0.00	0.00	-1.14	0.70	1.32	-16.58	191.7	38.5	23.9
28.86	4.67	1.98	34.0	0.70	23.8	-1.14	0.70	0.00	1.00	1.00	0.00	0.00	-1.14	0.70	1.33	-17.00	191.2	38.8	23.9
28.78	4.67	1.98	34.0	0.70	23.8	-1.14	0.70	0.00	1.00	1.00	0.00	0.00	-1.14	0.70	1.34	-17.43	190.8	39.0	23.8
28.70	4.67	1.98	34.0	0.70	23.8	-1.14	0.70	0.00	1.00	1.00	0.00	0.00	-1.14	0.70	1.35	-17.85	190.4	39.3	23.8
28.62	4.67	1.98	34.0	0.70	23.8	-1.14	0.70	0.00	1.00	1.00	0.00	0.00	-1.14	0.70	1.36	-18.28	190.0	39.6	23.7
28.54	4.67	1.98	34.0	0.70	23.8	-1.14	0.70	0.00	1.00	1.00	0.00	0.00	-1.14	0.70	1.36	-18.70	189.5	39.9	23.6
28.46	4.67	1.98	34.0	0.70	23.8	-1.14	0.70	0.00	1.00	1.00	0.00	0.00	-1.14	0.70	1.37	-19.13	189.1	40.1	23.6
28.38	4.67	1.98	34.0	0.70	23.8	-1.14	0.70	0.00	1.00	1.00	0.00	0.00	-1.14	0.70	1.38	-19.55	188.7	40.4	23.5
28.30	4.67	1.98	34.0	0.70	23.8	-1.14	0.70	0.00	1.00	1.00	0.00	0.00	-1.14	0.70	1.39	-19.98	188.3	40.7	23.4
28.22	4.67	1.98	34.0	0.70	23.8	-1.14	0.70	0.00	1.00	1.00	0.00	0.00	-1.14	0.70	1.40	-20.40	187.8	40.9	23.4
28.14	4.67	1.98	34.0	0.70	23.8	-1.14	0.70	0.00	1.00	1.00	0.00	0.00	-1.14	0.70	1.41	-20.83	187.4	41.2	23.3
28.06	4.67	1.98	34.0	0.70	23.8	-1.14	0.70	0.00	1.00	1.00	0.00	0.00	-1.14	0.70	1.42	-21.25	187.0	41.5	23.3
27.98	4.67	1.98	34.0	0.70	23.8	-1.14	0.70	0.00	1.00	1.00	0.00	0.00	-1.14	0.70	1.43	-21.68	186.6	41.8	23.2
27.90	4.67	1.98	34.0	0.70	23.8	-1.14	0.70	0.00	1.00	1.00	0.00	0.00	-1.14	0.70	1.44	-22.10	186.1	42.0	23.1
27.82	4.67	1.98	34.0	0.70	23.8	-1.14	0.70	0.00	1.00	1.00	0.00	0.00	-1.14	0.70	1.45	-22.53	185.7	42.3	23.1
27.74	4.67	1.98	34.0	0.70	23.8	-1.14	0.70	0.00	1.00	1.00	0.00	0.00	-1.14	0.70	1.46	-22.95	185.3	42.6	23.0
27.66	4.67	1.98	34.0	0.70	23.8	-1.14	0.70	0.00	1.00	1.00	0.00	0.00	-1.14	0.70	1.47	-23.38	184.9	42.8	23.0
27.58	4.67	1.98	34.0	0.70	23.8	-1.14	0.70	0.00	1.00	1.00	0.00	0.00	-1.14	0.70	1.48	-23.80	184.4	43.1	22.9
27.49	4.67	1.98	34.0	0.70	23.8	-1.14	0.70	0.00	1.00	1.00	0.00	0.00	-1.14	0.70	1.49	-24.23	184.0	43.4	22.8
27.41	4.67	1.98	34.0	0.70	23.8	-1.14	0.70	0.00	1.00	1.00	0.00	0.00	-1.14	0.70	1.50	-24.65	183.6	43.7	22.8
27.33	4.67	1.98	34.0	0.70	23.8	-1.14	0.70	0.00	1.00	1.00	0.00	0.00	-1.14	0.70	1.51	-25.08	183.2	43.9	22.7
27.25	4.67	1.98	34.0	0.70	23.8	-1.14	0.70	0.00	1.00	1.00	0.00	0.00	-1.14	0.70	1.52	-25.50	182.7	44.2	22.7
27.17	4.67	1.98	34.0	0.70	23.8	-1.14	0.70	0.00	1.00	1.00	0.00	0.00	-1.14	0.70	1.53	-25.93	182.3	44.5	22.6
27.09	4.67	1.98	34.0	0.70	23.8	-1.14	0.70	0.00	1.00	1.00	0.00	0.00	-1.14	0.70	1.54	-26.35	181.9	44.7	22.5
27.01	4.67	1.98	34.0	0.70	23.8	-1.14	0.70	0.00	1.00	1.00	0.00	0.00	-1.14	0.70	1.55	-26.78	181.5	45.0	22.5
26.93	4.67	1.98	34.0	0.70	23.8	-1.14	0.70	0.00	1.00	1.00	0.00	0.00	-1.14	0.70	1.56	-27.20	181.0	45.3	22.4
26.85	4.67	1.98	34.0	0.70	23.8	-1.14	0.70	0.00	1.00	1.00	0.00	0.00	-1.14	0.70	1.57	-27.63	180.6	45.6	22.4
26.77	4.67	1.98	34.0	0.70	23.8	-1.14	0.70	0.00	1.00	1.00	0.00	0.00	-1.14	0.70	1.57	-28.05	180.2	45.8	22.3
26.69	4.67	1.98	34.0	0.70	23.8	-1.14	0.70	0.00	1.00	1.00	0.00	0.00	-1.14	0.70	1.58	-28.48	179.8	46.1	22.2
26.61	4.67	1.98	34.0	0.70	23.8	-1.14	0.70	0.00	1.00	1.00	0.00	0.00	-1.14	0.70	1.59	-28.91	179.3	46.4	22.2
26.53	4.67	1.98	34.0	0.70	23.8	-1.14	0.70	0.00	1.00	1.00	0.00	0.00	-1.14	0.70	1.60	-29.33	178.9	46.6	22.1
26.45	4.67	1.98	34.0	0.70	23.8	-1.14	0.70	0.00	1.00	1.00	0.00	0.00	-1.14	0.70	1.61	-29.76	178.5	46.9	22.1
26.37	4.67	1.98	34.0	0.70	23.8	-1.14	0.70	0.00	1.00	1.00	0.00	0.00	-1.14	0.70	1.62	-30.18	178.1	47.2	22.0
26.29	4.67	1.98	34.0	0.70	23.8	-1.14	0.70	0.00	1.00	1.00	0.00	0.00	-1.14	0.70	1.63	-30.61	177.6	47.4	21.9
26.21	4.67	1.98	34.0	0.70	23.8	-1.14	0.70	0.00	1.00	1.00	0.00	0.00	-1.14	0.70	1.64	-31.03	177.2	47.7	21.9
26.13	4.67	1.98	34.0	0.70	23.8	-1.14	0.70	0.00	1.00	1.00	0.00	0.00	-1.14	0.70	1.65	-31.46	176.8	48.0	21.8
26.05	4.67	1.98	34.0	0.70	23.8	-1.14	0.70	0.00	1.00	1.00	0.00	0.00	-1.14	0.70	1.66	-31.88	176.3	48.3	21.7
25.97	4.67	1.98	34.0	0.70	23.8	-1.14	0.70	0.00	1.00	1.00	0.00	0.00	-1.14	0.70	1.67	-32.31	175.9	48.5	21.7
25.89	4.67	1.98	34.0	0.70	23.8	-1.14	0.70	0.00	1.00	1.00	0.00	0.00	-1.14	0.70	1.68	-32.73	175.5	48.8	21.6
25.81	4.67	1.98	34.0	0.70	23.8	-1.14	0.70	0.00	1.00	1.00	0.00	0.00	-1.14	0.70	1.69	-33.16	175.1	49.1	21.6
25.73	4.67	1.98	34.0	0.70	23.8	-1.14	0.70	0.00	1.00	1.00	0.00	0.00	-1.14	0.70	1.70	-33.58	174.6	49.3	21.5
25.65	4.67	1.98	34.0	0.70	23.8	-1.14	0.70	0.00	1.00	1.00	0.00	0.00	-1.14	0.70	1.71	-34.01	174.2	49.6	21.4
25.57	4.67	1.98	34.0	0.70	23.8	-1.14	0.70	0.00	1.00	1.00	0.00	0.00	-1.14	0.70	1.72	-34.43	173.8	49.9	21.4
25.49	4.67	1.98	34.0	0.70	23.8	-1.14	0.70	0.00	1.00	1.00	0.00	0.00	-1.14	0.70	1.73	-34.86	173.4	50.2	21.3
25.41	4.67	1.98	34.0	0.70	23.8	-1.14	0.70	0.00	1.00	1.00	0.00	0.00	-1.14	0.70	1.74	-35.28	172.9	50.4	21.3
25.33	4.67	1.98	34.0	0.70	23.8	-1.14	0.70	0.00	1.00	1.00	0.00	0.00	-1.14	0.70	1.75	-35.71	172.5	50.7	21.2
25.25	4.67	1.98	34.0	0.70	23.8	-1.14	0.70	0.00	1.00	1.00	0.00	0.00	-1.14	0.70	1.76	-36.13	172.1	51.0	21.1
25.17	4.67	1.98	34.0	0.70	23.8	-1.14	0.70	0.00	1.00	1.00	0.00	0.00	-1.14	0.70	1.77	-36.56	171.7	51.2	21.1
25.09	4.67	1.98	34.0	0.70	23.8	-1.14	0.70	0.00	1.00	1.00	0.00	0.00	-1.14	0.70	1.78	-36.98	171.2	51.5	21.0
25.01	4.67	1.98	34.0	0.70	23.8	-1.14	0.70	0.00	1.00	1.00	0.00	0.00	-1.14	0.70	1.78	-37.41	170.8	51.8	21.0
24.93	4.67	1.98	34.0	0.70	23.8	-1.14	0.70	0.00	1.00	1.00	0.00	0.00	-1.14	0.70	1.79	-37.83	170.4	52.1	20.9
24.85	4.67	1.98	34.0	0.70	23.8	-1.14	0.70	0.00	1.00	1.00	0.00	0.00	-1.14	0.70	1.80	-38.26	170.0	52.3	20.8
24.77	4.67	1.98	34.0	0.70	23.8	-1.14	0.70	0.00	1.00	1.00	0.00	0.00	-1.14	0.70	1.81	-38.68	169.5	52.6	20.8
24.69	4.67	1.98	34.0	0.70	23.8	-1.14	0.70	0.00	1.00	1.00	0.00	0.00	-1.14	0.70	1.82	-39.11	169.1	52.9	20.7
24.61	4.67	1.98	34.0	0.70	23.8	-1.14	0.70	0.00	1.00	1.00	0.00	0.00	-1.14	0.70	1.83	-39.53	168.7	53.1	20.7
24.53	4.67	1.98	34.0	0.70	23.8	-1.14	0.70	0.00	1.00	1.00	0.00	0.00	-1.14	0.70	1.84	-39.96	168.3	53.4	20.6
24.45	4.67	1.98	30.0	0.70	21.0	-0.99	0.61	0.00	1.00	1.00	0.00	0.00	-0.99	0.61	1.85	-40.33	167.9	53.7	20.5
24.37	4.67	1.98	30.0	0.70	21.0	-0.99	0.61	0.00	1.00	1.00	0.00	0.00	-0.99	0.61	1.86	-40.70	167.5	53.9	20.5
24.29	4.67	1.98	30.0	0.70	21.0	-0.99	0.61	0.00	1.00	1.00	0.00	0.00	-0.99	0.61	1.87	-41.07	167.2	54.1	20.4
24.21	4.67	1.98	30.0	0.70	21.0	-0.99	0.61	0.00	1.00	1.00	0.00	0.00	-0.99	0.61	1.88	-41.44	166.8	54.4	20.4
24.13	4.67	1.98	30.0	0.70	21.0	-0.99	0.61	0.00	1.00	1.00	0.00	0.00	-0.99	0.61	1.89	-41.81	166.4	54.6	20.3
24.05	4.67	1.98	30.0	0.70	21.0	-0.99	0.61	0.00	1.00	1.00	0.00	0.00	-0.99	0.61	1.90	-42.18	166.1	54.8	20.3
23.97	4.67	1.98	30.0	0.70	21.0	-0.99	0.61	0.00	1.00	1.00	0.00	0.00	-0.99	0.61	1.91	-42.55	165.7	55.1	20.2
23.89	4.67	1.98	30.0	0.70	21.0	-0.99	0.61	0.00	1.00	1.00	0.00	0.00	-0.99	0.61	1.92	-42.92	165.3	55.3	20.2
23.81	4.67	1.98	30.0	0.70	21.0	-0.99	0.61	0.00	1.00	1.00	0.00	0.00	-0.99	0.61	1.93	-43.29	164.9	55.5	20.1
23.73	4.67	1.98	30.0	0.70	21.0	-0.99	0.61	0.00	1.00	1.00	0.00	0.00	-0.99	0.61	1.94	-43.66	164.6	55.8	20.1
23.65	4.67	1.98	30.0	0.70	21.0	-0.99	0.61	0.00	1.00	1.00	0.00	0.00	-0.99	0.61	1.95	-44.03	164.2	56.0	20.0
23.57	4.67	1.98	30.0	0.70	21.0	-0.99	0.61	0.00	1.00	1.00	0.00	0.00	-0.99	0.61	1.96	-44.40	163.8	56.3	20.0
23.49	4.67	1.98	30.0	0.70	21.0	-0.99	0.61	0.00	1.00	1.00	0.00	0.00	-0.99	0.61	1.97	-44.77	163.5	56.5	19.9
23.41	4.67	1.98	30.0	0.70	21.0	-0.99	0.61	0.00	1.00	1.00	0.00	0.00	-0.99	0.61	1.98	-45.14	163.1	56.7	19.9
23.33	4.67	1.98	30.0	0.70	21.0	-0.99	0.61	0.00	1.00	1.00	0.00	0.00	-0.99	0.61	1.99	-45.51	162.7	57.0	19.8
23.25	4.67	1.98	30.0	0.70	21.0	-0.99	0.61	0.00	1.00	1.00	0.00	0.00	-0.99	0.61	1.99	-45.88	162.4	57.2	19.8
23.17	4.67	1.97	30.0	0.70	21.0	-0.99	0.61	0.00	1.00	1.00	0.00	0.00	-0.99	0.61	2.00	-46.24	162.0	57.4	19.7
23.09	4.67	1.97	30.0	0.70	21.0	-0.98	0.61	0.00	1.00	1.00	0.00	0.00	-0.98	0.61	2.01	-46.61	161.6	57.7	19.6
23.01	4.67	1.97	30.0	0.70	21.0	-0.98	0.60	0.00	1.00	1.00	0.00	0.00	-0.98	0.60	2.02	-46.98	161.3	57.9	19.6
22.93	4.67	1.96	30.0	0.70	21.0	-0.98	0.60	0.00	1.00	1.00	0.00	0.00	-0.98	0.60	2.03	-47.35	160.9	58.2	19.5
22.85	4.67	1.96	30.0	0.70	21.0	-0.98	0.60	0.00	1.00	1.00	0.00	0.00	-0.98	0.60	2.04	-47.71	160.5	58.4	19.5
22.77	4.67	1.96	30.0	0.70	21.0	-0.98	0.60	0.00	1.00	1.00	0.00	0.00	-0.98	0.60	2.05	-48.08	160.2	58.6	19.4
22.69	4.67	1.95	30.0	0.70	21.0	-0.97	0.60	0.00	1.00	1.00	0.00	0.00	-0.97	0.60	2.06	-48.44	159.8	58.9	19.4
22.61	4.67	1.95	30.0	0.70	21.0	-0.97	0.60	0.00	1.00	1.00	0.00	0.00	-0.97	0.60	2.07	-48.80	159.4	59.1	19.3
22.53	4.67	1.94	30.0	0.70	21.0	-0.97	0.60	0.00	1.00	1.00	0.00	0.00	-0.97	0.60	2.08	-49.17	159.1	59.3	19.3
22.44	4.67	1.94	30.0	0.70	21.0	-0.97	0.60	0.00	1.00	1.00	0.00	0.00	-0.97	0.60	2.09	-49.53	158.7	59.6	19.2
22.36	4.67	1.94	30.0	0.70	21.0	-0.97	0.59	0.00	1.00	1.00	0.00	0.00	-0.97	0.59	2.10	-49.89	158.3	59.8	19.2
22.28	4.67	1.93	30.0	0.70	21.0	-0.96	0.59	0.00	1.00	1.00	0.00	0.00	-0.96	0.59	2.11	-50.25	158.0	60.0	19.1
22.20	4.67	1.93	30.0	0.70	21.0	-0.96	0.59	0.00	1.00	1.00	0.00	0.00	-0.96	0.59	2.12	-50.61	157.6	60.2	19.1

22.12	4.67	1.93	30.0	0.70	21.0	-0.96	0.59	0.00	1.00	1.00	0.00	0.00	-0.96	0.59	2.13	-50.97	157.3	60.5	19.0
22.04	4.67	1.92	30.0	0.70	21.0	-0.96	0.59	0.00	1.00	1.00	0.00	0.00	-0.96	0.59	2.14	-51.33	156.9	60.7	19.0
21.96	4.67	1.92	30.0	0.70	21.0	-0.96	0.59	0.00	1.00	1.00	0.00	0.00	-0.96	0.59	2.15	-51.69	156.5	60.9	18.9
21.88	4.67	1.91	30.0	0.70	21.0	-0.96	0.59	0.00	1.00	1.00	0.00	0.00	-0.96	0.59	2.16	-52.05	156.2	61.2	18.9
21.80	4.67	1.91	30.0	0.70	21.0	-0.95	0.59	0.00	1.00	1.00	0.00	0.00	-0.95	0.59	2.17	-52.40	155.8	61.4	18.8
21.72	4.67	1.91	30.0	0.70	21.0	-0.95	0.59	0.00	1.00	1.00	0.00	0.00	-0.95	0.59	2.18	-52.76	155.5	61.6	18.8
21.64	4.67	1.90	30.0	0.70	21.0	-0.95	0.58	0.00	1.00	1.00	0.00	0.00	-0.95	0.58	2.19	-53.11	155.1	61.9	18.7
21.56	4.67	1.90	30.0	0.70	21.0	-0.95	0.58	0.00	1.00	1.00	0.00	0.00	-0.95	0.58	2.20	-53.47	154.8	62.1	18.7
21.48	4.67	1.90	30.0	0.70	21.0	-0.95	0.58	0.00	1.00	1.00	0.00	0.00	-0.95	0.58	2.20	-53.82	154.4	62.3	18.6
21.40	4.67	1.89	30.0	0.70	21.0	-0.94	0.58	0.00	1.00	1.00	0.00	0.00	-0.94	0.58	2.21	-54.18	154.1	62.5	18.6
21.32	4.67	1.89	30.0	0.70	21.0	-0.94	0.58	0.00	1.00	1.00	0.00	0.00	-0.94	0.58	2.22	-54.53	153.7	62.8	18.5
21.24	4.67	1.88	30.0	0.70	21.0	-0.94	0.58	0.00	1.00	1.00	0.00	0.00	-0.94	0.58	2.23	-54.88	153.4	63.0	18.5
21.16	4.67	1.88	30.0	0.70	21.0	-0.94	0.58	0.00	1.00	1.00	0.00	0.00	-0.94	0.58	2.24	-55.23	153.0	63.2	18.4
21.08	4.67	1.88	30.0	0.70	21.0	-0.94	0.58	0.00	1.00	1.00	0.00	0.00	-0.94	0.58	2.25	-55.58	152.6	63.4	18.4
21.00	4.67	1.87	30.0	0.70	21.0	-0.93	0.58	0.00	1.00	1.00	0.00	0.00	-0.93	0.58	2.26	-55.93	152.3	63.7	18.3
20.92	4.67	1.87	30.0	0.70	21.0	-0.93	0.57	0.00	1.00	1.00	0.00	0.00	-0.93	0.57	2.27	-56.28	152.0	63.9	18.3
20.84	4.67	1.87	30.0	0.70	21.0	-0.93	0.57	0.00	1.00	1.00	0.00	0.00	-0.93	0.57	2.28	-56.63	151.6	64.1	18.2
20.76	4.67	1.86	30.0	0.70	21.0	-0.93	0.57	0.00	1.00	1.00	0.00	0.00	-0.93	0.57	2.29	-56.98	151.3	64.3	18.2
20.68	4.67	1.86	30.0	0.70	21.0	-0.93	0.57	0.00	1.00	1.00	0.00	0.00	-0.93	0.57	2.30	-57.32	150.9	64.6	18.1
20.60	4.67	1.85	30.0	0.70	21.0	-0.93	0.57	0.00	1.00	1.00	0.00	0.00	-0.93	0.57	2.31	-57.67	150.6	64.8	18.1
20.52	4.67	1.85	30.0	0.70	21.0	-0.92	0.57	0.00	1.00	1.00	0.00	0.00	-0.92	0.57	2.32	-58.01	150.2	65.0	18.0
20.44	4.67	1.85	30.0	0.70	21.0	-0.92	0.57	0.00	1.00	1.00	0.00	0.00	-0.92	0.57	2.33	-58.36	149.9	65.2	18.0
20.36	4.67	1.84	30.0	0.70	21.0	-0.92	0.57	0.00	1.00	1.00	0.00	0.00	-0.92	0.57	2.34	-58.70	149.5	65.4	17.9
20.28	4.67	1.84	30.0	0.70	21.0	-0.92	0.56	0.00	1.00	1.00	0.00	0.00	-0.92	0.56	2.35	-59.05	149.2	65.7	17.9
20.20	4.67	1.84	30.0	0.70	21.0	-0.92	0.56	0.00	1.00	1.00	0.00	0.00	-0.92	0.56	2.36	-59.39	148.8	65.9	17.8
20.12	4.67	1.83	30.0	0.70	21.0	-0.91	0.56	0.00	1.00	1.00	0.00	0.00	-0.91	0.56	2.37	-59.73	148.5	66.1	17.8
20.04	4.67	1.83	30.0	0.70	21.0	-0.91	0.56	0.00	1.00	1.00	0.00	0.00	-0.91	0.56	2.38	-60.07	148.2	66.3	17.7
19.96	4.67	1.82	30.0	0.70	21.0	-0.91	0.56	0.00	1.00	1.00	0.00	0.00	-0.91	0.56	2.39	-60.41	147.8	66.5	17.7
19.88	4.67	1.82	30.0	0.70	21.0	-0.91	0.56	0.00	1.00	1.00	0.00	0.00	-0.91	0.56	2.40	-60.75	147.5	66.8	17.6
19.80	4.67	1.82	30.0	0.70	21.0	-0.91	0.56	0.00	1.00	1.00	0.00	0.00	-0.91	0.56	2.41	-61.09	147.1	67.0	17.6
19.72	4.67	1.81	30.0	0.70	21.0	-0.90	0.56	0.00	1.00	1.00	0.00	0.00	-0.90	0.56	2.41	-61.43	146.8	67.2	17.5
19.64	4.67	1.81	30.0	0.70	21.0	-0.90	0.56	0.00	1.00	1.00	0.00	0.00	-0.90	0.56	2.42	-61.77	146.5	67.4	17.5
19.56	4.67	1.81	30.0	0.70	21.0	-0.90	0.55	0.00	1.00	1.00	0.00	0.00	-0.90	0.55	2.43	-62.11	146.1	67.6	17.4
19.48	4.67	1.80	0.0	0.70	0.0	0.00	0.00	0.35	1.00	1.00	-0.35	0.35	-0.35	0.35	2.44	-62.24	146.0	67.8	17.4
19.40	4.67	1.80	0.0	0.70	0.0	0.00	0.00	0.35	1.00	1.00	-0.35	0.35	-0.35	0.35	2.45	-62.37	145.9	67.9	17.4
19.32	4.67	1.79	0.0	0.70	0.0	0.00	0.00	0.35	1.00	1.00	-0.35	0.35	-0.35	0.35	2.46	-62.50	145.7	68.1	17.4
19.24	4.67	1.79	0.0	0.70	0.0	0.00	0.00	0.35	1.00	1.00	-0.35	0.35	-0.35	0.35	2.47	-62.63	145.6	68.2	17.4
19.16	4.67	1.79	0.0	0.70	0.0	0.00	0.00	0.35	1.00	1.00	-0.35	0.35	-0.35	0.35	2.48	-62.76	145.5	68.3	17.4
19.08	4.67	1.78	0.0	0.70	0.0	0.00	0.00	0.35	1.00	1.00	-0.35	0.35	-0.35	0.35	2.49	-62.89	145.3	68.5	17.4
19.00	4.67	1.78	0.0	0.70	0.0	0.00	0.00	0.35	1.00	1.00	-0.35	0.35	-0.35	0.35	2.50	-63.02	145.2	68.6	17.4
18.92	4.67	1.77	0.0	0.70	0.0	0.00	0.00	0.35	1.00	1.00	-0.35	0.35	-0.35	0.35	2.51	-63.15	145.1	68.8	17.4
18.84	4.67	1.77	0.0	0.70	0.0	0.00	0.00	0.35	1.00	1.00	-0.35	0.35	-0.35	0.35	2.52	-63.28	144.9	68.9	17.4
18.76	4.67	1.77	0.0	0.70	0.0	0.00	0.00	0.35	1.00	1.00	-0.35	0.35	-0.35	0.35	2.53	-63.42	144.8	69.0	17.4
18.68	4.67	1.76	0.0	0.70	0.0	0.00	0.00	0.35	1.00	1.00	-0.35	0.35	-0.35	0.35	2.54	-63.55	144.7	69.2	17.4
18.60	4.67	1.76	0.0	0.70	0.0	0.00	0.00	0.35	1.00	1.00	-0.35	0.35	-0.35	0.35	2.55	-63.68	144.6	69.3	17.4
18.52	4.67	1.76	0.0	0.70	0.0	0.00	0.00	0.35	1.00	1.00	-0.35	0.35	-0.35	0.35	2.56	-63.81	144.4	69.5	17.4
18.44	4.67	1.75	0.0	0.70	0.0	0.00	0.00	0.35	1.00	1.00	-0.35	0.35	-0.35	0.35	2.57	-63.94	144.3	69.6	17.4
18.36	4.67	1.75	0.0	0.70	0.0	0.00	0.00	0.35	1.00	1.00	-0.35	0.35	-0.35	0.35	2.58	-64.07	144.2	69.7	17.4
18.28	4.67	1.74	0.0	0.70	0.0	0.00	0.00	0.35	1.00	1.00	-0.35	0.35	-0.35	0.35	2.59	-64.20	144.0	69.9	17.4
18.20	4.67	1.74	0.0	0.70	0.0	0.00	0.00	0.35	1.00	1.00	-0.35	0.35	-0.35	0.35	2.60	-64.33	143.9	70.0	17.4
18.12	4.67	1.74	0.0	0.70	0.0	0.00	0.00	0.35	1.00	1.00	-0.35	0.35	-0.35	0.35	2.61	-64.46	143.8	70.2	17.4
18.04	4.67	1.73	0.0	0.70	0.0	0.00	0.00	0.35	1.00	1.00	-0.35	0.35	-0.35	0.35	2.62	-64.59	143.6	70.3	17.4
17.96	4.67	1.73	0.0	0.70	0.0	0.00	0.00	0.35	1.00	1.00	-0.35	0.35	-0.35	0.35	2.62	-64.72	143.5	70.4	17.4
17.88	4.67	1.72	0.0	0.70	0.0	0.00	0.00	0.35	1.00	1.00	-0.35	0.35	-0.35	0.35	2.63	-64.86	143.4	70.6	17.4
17.80	4.67	1.72	0.0	0.70	0.0	0.00	0.00	0.35	1.00	1.00	-0.35	0.35	-0.35	0.35	2.64	-64.99	143.2	70.7	17.4
17.72	4.67	1.72	0.0	0.70	0.0	0.00	0.00	0.35	1.00	1.00	-0.35	0.35	-0.35	0.35	2.65	-65.12	143.1	70.9	17.4
17.64	4.67	1.71	0.0	0.70	0.0	0.00	0.00	0.35	1.00	1.00	-0.35	0.35	-0.35	0.35	2.66	-65.25	143.0	71.0	17.4
17.56	4.67	1.71	0.0	0.70	0.0	0.00	0.00	0.35	1.00	1.00	-0.35	0.35	-0.35	0.35	2.67	-65.38	142.9	71.1	17.4
17.47	4.67	1.71	0.0	0.70	0.0	0.00	0.00	0.35	1.00	1.00	-0.35	0.35	-0.35	0.35	2.68	-65.51	142.7	71.3	17.4
17.39	4.67	1.70	0.0	0.70	0.0	0.00	0.00	0.35	1.00	1.00	-0.35	0.35	-0.35	0.35	2.69	-65.64	142.6	71.4	17.4
17.31	4.67	1.70	0.0	0.70	0.0	0.00	0.00	0.35	1.00	1.00	-0.35	0.35	-0.35	0.35	2.70	-65.77	142.5	71.6	17.4
17.23	4.67	1.69	0.0	0.70	0.0	0.00	0.00	0.35	1.00	1.00	-0.35	0.35	-0.35	0.35	2.71	-65.90	142.3	71.7	17.4
17.15	4.67	1.69	0.0	0.70	0.0	0.00	0.00	0.35	1.00	1.00	-0.35	0.35	-0.35	0.35	2.72	-66.03	142.2	71.8	17.4
17.07	4.67	1.69	0.0	0.70	0.0	0.00	0.00	0.35	1.00	1.00	-0.35	0.35	-0.35	0.35	2.73	-66.16	142.1	72.0	17.4
16.99	4.67	1.68	0.0	0.70	0.0	0.00	0.00	0.35	1.00	1.00	-0.35	0.35	-0.35	0.35	2.74	-66.30	141.9	72.1	17.4
16.91	4.67	1.68	0.0	0.70	0.0	0.00	0.00	0.35	1.00	1.00	-0.35	0.35	-0.35	0.35	2.75	-66.43	141.8	72.3	17.4
16.83	4.67	1.67	0.0	0.70	0.0	0.00	0.00	0.35	1.00	1.00	-0.35	0.35	-0.35	0.35	2.76	-66.56	141.7	72.4	17.4
16.75	4.67	1.67	0.0	0.70	0.0	0.00	0.00	0.35	1.00	1.00	-0.35	0.35	-0.35	0.35	2.77	-66.69	141.5	72.6	17.4
16.67	4.67	1.67	0.0	0.70	0.0	0.00	0.00	0.35	1.00	1.00	-0.35	0.35	-0.35	0.35	2.78	-66.82	141.4	72.7	17.4
16.59	4.67	1.66	0.0	0.70	0.0	0.00	0.00	0.35	1.00	1.00	-0.35	0.35	-0.35	0.35	2.79	-66.95	141.3	72.8	17.4
16.51	4.67	1.66	0.0	0.70	0.0	0.00	0.00	0.35	1.00	1.00	-0.35	0.35	-0.35	0.35	2.80	-67.08	141.1	73.0	17.4
16.43	4.67	1.65	0.0	0.70	0.0	0.00	0.00	0.35	1.00	1.00	-0.35	0.35	-0.35	0.35	2.81	-67.21	141.0	73.1	17.4
16.35	4.67	1.65	0.0	0.70	0.0	0.00	0.00	0.35	1.00	1.00	-0.35	0.35	-0.35	0.35	2.82	-67.34	140.9	73.3	17.4
16.27	4.67	1.65	0.0	0.70	0.0	0.00	0.00	0.35	1.00	1.00	-0.35	0.35	-0.35	0.35	2.83	-67.47	140.8	73.4	17.4
16.19	4.67	1.64	0.0	0.70	0.0	0.00	0.00	0.35	1.00	1.00	-0.35	0.35	-0.35	0.35	2.83	-67.61	140.6	73.5	17.4
16.11	4.67	1.64	0.0	0.70	0.0	0.00	0.00	0.35	1.00	1.00	-0.35	0.35	-0.35	0.35	2.84	-67.74	140.5	73.7	17.4
16.03	4.67	1.64	0.0	0.70	0.0	0.00	0.00	0.35	1.00	1.00	-0.35	0.35	-0.35	0.35	2.85	-67.87	140.4	73.8	17.4
15.95	4.67	1.63	0.0	0.70	0.0	0.00	0.00	0.35	1.00	1.00	-0.35	0.35	-0.35	0.35	2.86	-68.00	140.2	74.0	17.4
15.87	4.67	1.63	0.0	0.70	0.0	0.00	0.00	0.35	1.00	1.00	-0.35	0.35	-0.35	0.35	2.87	-68.13	140.1	74.1	17.4
15.79	4.67	1.62	0.0	0.70	0.0	0.00	0.00	0.35	1.00	1.00	-0.35	0.35	-0.35	0.35	2.88	-68.26	140.0	74.2	17.4
15.71	4.67	1.62	0.0	0.70	0.0	0.00	0.00	0.35	1.00	1.00	-0.35	0.35	-0.35	0.35	2.89	-68.39	139.8	74.4	17.4
15.63	4.67	1.62	0.0	0.70	0.0	0.00	0.00	0.35	1.00	1.00	-0.35	0.35	-0.35	0.35	2.90	-68.52	139.7	74.5	17.4
15.55	4.67	1.61	0.0	0.70	0.0	0.00	0.00	0.35	1.00	1.00	-0.35	0.35	-0.35	0.35	2.91	-68.65	139.6	74.7	17.4
15.47	4.67	1.61	0.0	0.70	0.0	0.00	0.00	0.35	1.00	1.00	-0.35	0.35	-0.35	0.35	2.92	-68.78	139.4	74.8	17.4
15.39	4.67	1.60	0.0	0.70	0.0	0.00	0.00	0.35	1.00	1.00	-0.35	0.35	-0.35	0.35	2.93	-68.91	139.3	74.9	17.4
15.31	4.67	1.60	0.0	0.70	0.0	0.00	0.00	0.35	1.00	1.00	-0.35	0.35	-0.35	0.35	2.94	-69.05	139.2	75.1	17.4
15.23	4.67	1.60	0.0	0.70	0.0	0.00	0.00	0.35	1.00	1.00	-0.35	0.35	-0.35	0.35	2.95	-69.18	139.1	75.2	17.4
15.15	4.67	1.59	0.0	0.70	0.0	0.00	0.00	0.35	1.00	1.00	-0.35	0.35	-0.35	0.35	2.96	-69.31	138.9	75.4	17.4
15.07	4.67	1.59	0.0	0.70	0.0	0.00	0.00	0.35	1.00	1.00	-0.35	0.35	-0.35	0.35	2.97	-69.44	138.8	75.5	17.4
14.99	4.67	1.58	0.0	0.70	0.0	0.00	0.00	0.35	1.00	1.00	-0.35	0.35	-0.35	0.35	2.98	-69.57	138.7	75.6	17.4
14.91	4.67	1.58	0.0	0.70	0.0	0.00	0.00	0.35	1.00	1.00	-0.35	0.35	-0.35	0.35	2.99	-69.70	138.5	75.8	17.4
14.83	4.67	1.58	0.0	0.70	0.0	0.00	0.00	0.35	1.00	1.00	-0.35	0.35	-0.35	0.35	3.00	-69.83	138.4	75.9	17.4
14.75	4.67	1.57	0.0	0.70	0.0	0.00	0.00	0.35	1.00	1.00	-0.35	0.35	-0.35	0.35	3.01	-69.96	138.3	76.1	17.4
14.67	4.67	1.57	0.0	0.70	0.0	0.00	0.00	0.35	1.00	1.00	-0.35	0.35	-0.35	0.35	3.02	-70.09	138.1	76.2	17.4
14.59	4.67	1.57	0.0	0.70	0.0	0.00	0.00	0.35	1.00	1.00	-0.35	0.35	-0.35	0.35	3.03	-70.22	138.0	76.3	17.4
14.51	4.67	1.56	0.0	0.70	0.0	0.00	0.00	0.35	1.00	1.00	-0.35	0.35	-0.35	0.35	3.04	-70.35	137.9	76.5	17.4
14.43	4.67	1.56	0.0	0.70	0.0	0.00	0.00	0.35	1.00	1.00	-0.35	0.35	-0.35	0.35	3.04	-70.49	137.7	76.6	17.4
14.35	4.67	1.55	0.0	0.70	0.0	0.00	0.00	0.35	1.00	1.00	-0.35	0.35	-0.35	0.35	3.05	-70.62	137.6	76.8	17.4
14.27	4.67	1.55	0.0	0.70	0.0	0.00	0.00	0.35	1.00	1.00	-0.35	0.35	-0.35	0.35	3.06	-70.75	137.5	76.9	17.4
14.19	4.67	1.55	0.0	0.70	0.0	0.00	0.00	0.35	1.00	1.00	-0.35	0.35	-0.35	0.35	3.07	-70.88	137.4	77.0	17.4
14.11	4.67	1.54	0.0	0.70	0.0	0.00	0.00	0.35	1.00	1.00	-0.35	0.35	-0.35	0.35	3.08	-71.01	137.2	77.2	17.4
14.03	4.67	1.54	0.0	0.70	0.0	0.00	0.00	0.35	1.00	1.00	-0.35	0.35	-0.35	0.35	3.09	-71.14	137.1	77.3	17.4
13.95	4.67	1.53	0.0	0.70	0.0	0.00	0.00	0.35	1.00	1.00	-0.35	0.35	-0.35	0.35	3.10	-71.27	137.0	77.5	17.4
13.87	4.67	1.53	0.0	0.70	0.0	0.00	0.00	0.35	1.00	1.00	-0.35	0.35	-0.35	0.35	3.11	-71.40	136.8	77.6	17.4
13.79	4.67	1.53	0.0	0.70	0.0	0.00	0.00	0.35	1.00	1.00	-0.35	0.35	-0.35	0.35	3.12	-71.53	136.7	77.7	17.4
13.71	4.67	1.52	0.0	0.70	0.0	0.00	0.00	0.35	1.00	1.00	-0.35	0.35	-0.35	0.35	3.13	-71.66	136.6	77.9	17.4
13.63	4.67	1.52	0.0	0.70	0.0	0.00	0.00	0.35	1.00	1.00	-0.35	0.35	-0.35	0.35	3.14	-71.79	136.4	78.0	17.4
13.55	4.67	1.51	0.0	0.70	0.0	0.00	0.00	0.35	1.00	1.00	-0.35	0.35	-0.35	0.35	3.15	-71.93	136.3	78.2	17.4
13.47	4.67	1.51	0.0	0.70	0.0	0.00	0.00	0.35	1.00	1.00	-0.35	0.35	-0.35	0.35	3.16	-72.06	136.2	78.3	17.4
13.39	4.67	1.51	0.0	0.70	0.0	0.00	0.00	0.35	1.00	1.00	-0.35	0.35	-0.35	0.35	3.17	-72.19	136.0	78.5	17.4
13.31	4.67	1.50	0.0	0.70	0.0	0.00	0.00	0.35	1.00	1.00	-0.35	0.35	-0.35	0.35	3.18	-72.32	135.9	78.6	17.4
13.23	4.67	1.50	0.0	0.70	0.0	0.00	0.00	0.35	1.00	1.00	-0.35	0.35	-0.35	0.35	3.19	-72.45	135.8	78.7	17.4
13.15	4.67	1.50	0.0	0.70	0.0	0.00	0.00	0.35	1.00	1.00	-0.35	0.35	-0.35	0.35	3.20	-72.58	135.6	78.9	17.4
13.07	4.67	1.49	0.0	0.70	0.0	0.00	0.00	0.35	1.00	1.00	-0.35	0.35	-0.35	0.35	3.21	-72.71	135.5	79.0	17.4
12.99	4.67	1.49	0.0	0.70	0.0	0.00	0.00	0.35	1.00	1.00	-0.35	0.35	-0.35	0.35	3.22	-72.84	135.4	79.2	17.4
12.91	4.67	1.48	0.0	0.70	0.0	0.00	0.00	0.35	1.00	1.00	-0.35	0.35	-0.35	0.35	3.23	-72.97	135.3	79.3	17.4
12.83	4.67	1.48	0.0	0.70	0.0	0.00	0.00	0.35	1.00	1.00	-0.35	0.35	-0.35	0.35	3.24	-73.10	135.1	79.4	17.4

12.75	4.67	1.48	0.0	0.70	0.0	0.00	0.00	0.35	1.00	1.00	-0.35	0.35	-0.35	0.35	3.25	-73.24	135.0	79.6	17.4
12.67	4.67	1.47	0.0	0.70	0.0	0.00	0.00	0.35	1.00	1.00	-0.35	0.35	-0.35	0.35	3.25	-73.37	134.9	79.7	17.4
12.59	4.67	1.47	0.0	0.70	0.0	0.00	0.00	0.35	1.00	1.00	-0.35	0.35	-0.35	0.35	3.26	-73.50	134.7	79.9	17.4
12.51	4.67	1.46	0.0	0.70	0.0	0.00	0.00	0.35	1.00	1.00	-0.35	0.35	-0.35	0.35	3.27	-73.63	134.6	80.0	17.4
12.42	4.67	1.46	0.0	0.70	0.0	0.00	0.00	0.35	1.00	1.00	-0.35	0.35	-0.35	0.35	3.28	-73.76	134.5	80.1	17.4
12.34	4.67	1.46	0.0	0.70	0.0	0.00	0.00	0.35	1.00	1.00	-0.35	0.35	-0.35	0.35	3.29	-73.89	134.3	80.3	17.4
12.26	4.67	1.45	0.0	0.70	0.0	0.00	0.00	0.35	1.00	1.00	-0.35	0.35	-0.35	0.35	3.30	-74.02	134.2	80.4	17.4
12.18	4.67	1.45	0.0	0.70	0.0	0.00	0.00	0.35	1.00	1.00	-0.35	0.35	-0.35	0.35	3.31	-74.15	134.1	80.6	17.4
12.10	4.67	1.45	0.0	0.70	0.0	0.00	0.00	0.35	1.00	1.00	-0.35	0.35	-0.35	0.35	3.32	-74.28	133.9	80.7	17.4
12.02	4.67	1.44	0.0	0.70	0.0	0.00	0.00	0.35	1.00	1.00	-0.35	0.35	-0.35	0.35	3.33	-74.41	133.8	80.8	17.4
11.94	4.67	1.43	0.0	0.70	0.0	0.00	0.00	0.35	1.00	1.00	-0.35	0.35	-0.35	0.35	3.35	-74.54	133.7	81.0	17.4
11.86	4.67	1.42	0.0	0.70	0.0	0.00	0.00	0.35	1.00	1.00	-0.35	0.35	-0.35	0.35	3.36	-74.68	133.6	81.1	17.4
11.78	4.67	1.42	0.0	0.70	0.0	0.00	0.00	0.35	1.00	1.00	-0.35	0.35	-0.35	0.35	3.38	-74.81	133.4	81.3	17.4
11.70	4.67	1.41	0.0	0.70	0.0	0.00	0.00	0.35	1.00	1.00	-0.35	0.35	-0.35	0.35	3.40	-74.94	133.3	81.4	17.4
11.62	4.67	1.40	0.0	0.70	0.0	0.00	0.00	0.35	1.00	1.00	-0.35	0.35	-0.35	0.35	3.41	-75.07	133.2	81.6	17.4
11.54	4.67	1.39	0.0	0.70	0.0	0.00	0.00	0.35	1.00	1.00	-0.35	0.35	-0.35	0.35	3.43	-75.20	133.0	81.7	17.4
11.46	4.67	1.38	0.0	0.70	0.0	0.00	0.00	0.35	1.00	1.00	-0.35	0.35	-0.35	0.35	3.45	-75.33	132.9	81.9	17.4
11.38	4.67	1.37	0.0	0.70	0.0	0.00	0.00	0.35	1.00	1.00	-0.35	0.35	-0.35	0.35	3.46	-75.46	132.8	82.0	17.4
11.30	4.67	1.36	0.0	0.70	0.0	0.00	0.00	0.35	1.00	1.00	-0.35	0.35	-0.35	0.35	3.48	-75.59	132.6	82.2	17.4
11.22	4.67	1.35	0.0	0.70	0.0	0.00	0.00	0.35	1.00	1.00	-0.35	0.35	-0.35	0.35	3.49	-75.72	132.5	82.3	17.4
11.14	4.67	1.35	0.0	0.70	0.0	0.00	0.00	0.35	1.00	1.00	-0.35	0.35	-0.35	0.35	3.51	-75.85	132.4	82.5	17.4
11.06	4.67	1.34	0.0	0.70	0.0	0.00	0.00	0.35	1.00	1.00	-0.35	0.35	-0.35	0.35	3.53	-75.98	132.2	82.6	17.4
10.98	4.67	1.33	0.0	0.70	0.0	0.00	0.00	0.35	1.00	1.00	-0.35	0.35	-0.35	0.35	3.54	-76.12	132.1	82.8	17.4
10.90	4.67	1.32	0.0	0.70	0.0	0.00	0.00	0.35	1.00	1.00	-0.35	0.35	-0.35	0.35	3.56	-76.25	132.0	82.9	17.4
10.82	4.67	1.31	0.0	0.70	0.0	0.00	0.00	0.35	1.00	1.00	-0.35	0.35	-0.35	0.35	3.58	-76.38	131.9	83.0	17.4
10.74	4.67	1.30	0.0	0.70	0.0	0.00	0.00	0.35	1.00	1.00	-0.35	0.35	-0.35	0.35	3.59	-76.51	131.7	83.2	17.4
10.66	4.67	1.29	0.0	0.70	0.0	0.00	0.00	0.35	1.00	1.00	-0.35	0.35	-0.35	0.35	3.61	-76.64	131.6	83.3	17.4
10.58	4.67	1.29	0.0	0.70	0.0	0.00	0.00	0.35	1.00	1.00	-0.35	0.35	-0.35	0.35	3.63	-76.77	131.5	83.5	17.4
10.50	4.67	1.28	0.0	0.70	0.0	0.00	0.00	0.35	1.00	1.00	-0.35	0.35	-0.35	0.35	3.64	-76.90	131.3	83.6	17.4
10.42	4.67	1.27	0.0	0.70	0.0	0.00	0.00	0.35	1.00	1.00	-0.35	0.35	-0.35	0.35	3.66	-77.03	131.2	83.8	17.4
10.34	4.67	1.26	0.0	0.70	0.0	0.00	0.00	0.35	1.00	1.00	-0.35	0.35	-0.35	0.35	3.67	-77.16	131.1	83.9	17.4
10.26	4.67	1.25	0.0	0.70	0.0	0.00	0.00	0.35	1.00	1.00	-0.35	0.35	-0.35	0.35	3.69	-77.29	130.9	84.1	17.4
10.18	4.67	1.24	0.0	0.70	0.0	0.00	0.00	0.35	1.00	1.00	-0.35	0.35	-0.35	0.35	3.71	-77.42	130.8	84.2	17.4
10.10	4.67	1.23	0.0	0.70	0.0	0.00	0.00	0.35	1.00	1.00	-0.35	0.35	-0.35	0.35	3.72	-77.56	130.7	84.4	17.4
10.02	4.67	1.22	0.0	0.70	0.0	0.00	0.00	0.35	1.00	1.00	-0.35	0.35	-0.35	0.35	3.74	-77.69	130.5	84.5	17.4
9.94	4.67	1.22	0.0	0.70	0.0	0.00	0.00	0.35	1.00	1.00	-0.35	0.35	-0.35	0.35	3.76	-77.82	130.4	84.7	17.4
9.86	4.67	1.21	0.0	0.70	0.0	0.00	0.00	0.35	1.00	1.00	-0.35	0.35	-0.35	0.35	3.77	-77.95	130.3	84.8	17.4
9.78	4.67	1.20	0.0	0.70	0.0	0.00	0.00	0.35	1.00	1.00	-0.35	0.35	-0.35	0.35	3.79	-78.08	130.1	85.0	17.4
9.70	4.67	1.19	0.0	0.70	0.0	0.00	0.00	0.35	1.00	1.00	-0.35	0.35	-0.35	0.35	3.81	-78.21	130.0	85.1	17.4
9.62	4.67	1.18	0.0	0.70	0.0	0.00	0.00	0.35	1.00	1.00	-0.35	0.35	-0.35	0.35	3.82	-78.34	129.9	85.3	17.4
9.54	4.67	1.17	0.0	0.70	0.0	0.00	0.00	0.35	1.00	1.00	-0.35	0.35	-0.35	0.35	3.84	-78.47	129.8	85.4	17.4
9.46	4.67	1.16	0.0	0.70	0.0	0.00	0.00	0.35	1.00	1.00	-0.35	0.35	-0.35	0.35	3.85	-78.60	129.6	85.6	17.4
9.38	4.67	1.16	0.0	0.70	0.0	0.00	0.00	0.35	1.00	1.00	-0.35	0.35	-0.35	0.35	3.87	-78.73	129.5	85.7	17.4
9.30	4.67	1.15	0.0	0.70	0.0	0.00	0.00	0.35	1.00	1.00	-0.35	0.35	-0.35	0.35	3.89	-78.86	129.4	85.8	17.4
9.22	4.67	1.14	0.0	0.70	0.0	0.00	0.00	0.35	1.00	1.00	-0.35	0.35	-0.35	0.35	3.90	-79.00	129.2	86.0	17.4
9.14	4.67	1.13	0.0	0.70	0.0	0.00	0.00	0.35	1.00	1.00	-0.35	0.35	-0.35	0.35	3.92	-79.13	129.1	86.1	17.4
9.06	4.67	1.12	0.0	0.70	0.0	0.00	0.00	0.35	1.00	1.00	-0.35	0.35	-0.35	0.35	3.94	-79.26	129.0	86.3	17.4
8.98	4.67	1.11	0.0	0.70	0.0	0.00	0.00	0.35	1.00	1.00	-0.35	0.35	-0.35	0.35	3.95	-79.39	128.8	86.4	17.4
8.90	4.67	1.10	0.0	0.70	0.0	0.00	0.00	0.35	1.00	1.00	-0.35	0.35	-0.35	0.35	3.97	-79.52	128.7	86.6	17.4
8.82	4.67	1.09	0.0	0.70	0.0	0.00	0.00	0.35	1.00	1.00	-0.35	0.35	-0.35	0.35	3.99	-79.65	128.6	86.7	17.4
8.74	4.67	1.09	0.0	0.70	0.0	0.00	0.00	0.35	1.00	1.00	-0.35	0.35	-0.35	0.35	4.00	-79.78	128.4	86.9	17.4
8.66	4.67	1.08	0.0	0.70	0.0	0.00	0.00	0.35	1.00	1.00	-0.35	0.35	-0.35	0.35	4.02	-79.91	128.3	87.0	17.4
8.58	4.67	1.07	0.0	0.70	0.0	0.00	0.00	0.35	1.00	1.00	-0.35	0.35	-0.35	0.35	4.03	-80.04	128.2	87.2	17.4
8.50	4.67	1.06	28.0	0.70	19.6	-0.49	0.30	0.25	1.00	1.00	-0.25	0.25	-0.74	0.55	4.05	-80.32	127.9	87.4	17.4
8.42	4.67	1.05	28.0	0.70	19.6	-0.49	0.30	0.25	1.00	1.00	-0.25	0.25	-0.74	0.55	4.07	-80.60	127.6	87.6	17.4
8.34	4.67	1.04	28.0	0.70	19.6	-0.48	0.30	0.25	1.00	1.00	-0.25	0.25	-0.73	0.55	4.08	-80.87	127.4	87.8	17.4
8.26	4.67	1.03	28.0	0.70	19.6	-0.48	0.29	0.25	1.00	1.00	-0.25	0.25	-0.73	0.54	4.10	-81.14	127.1	88.1	17.3
8.18	4.67	1.02	28.0	0.70	19.6	-0.47	0.29	0.25	1.00	1.00	-0.25	0.25	-0.72	0.54	4.12	-81.41	126.8	88.3	17.3
8.10	4.67	1.01	28.0	0.70	19.6	-0.47	0.29	0.25	1.00	1.00	-0.25	0.25	-0.72	0.54	4.13	-81.68	126.6	88.5	17.3
8.02	4.67	1.00	28.0	0.70	19.6	-0.46	0.28	0.25	1.00	1.00	-0.25	0.25	-0.71	0.53	4.15	-81.94	126.3	88.7	17.3
7.94	4.67	0.99	28.0	0.70	19.6	-0.46	0.28	0.25	1.00	1.00	-0.25	0.25	-0.71	0.53	4.16	-82.21	126.0	88.9	17.2
7.86	4.67	0.98	28.0	0.70	19.6	-0.45	0.28	0.25	1.00	1.00	-0.25	0.25	-0.70	0.53	4.18	-82.47	125.8	89.1	17.2
7.78	4.67	0.97	28.0	0.70	19.6	-0.45	0.28	0.25	1.00	1.00	-0.25	0.25	-0.70	0.53	4.20	-82.73	125.5	89.4	17.2
7.70	4.67	0.96	28.0	0.70	19.6	-0.44	0.27	0.25	1.00	1.00	-0.25	0.25	-0.69	0.52	4.21	-82.99	125.2	89.6	17.2
7.62	4.67	0.95	28.0	0.70	19.6	-0.44	0.27	0.25	1.00	1.00	-0.25	0.25	-0.69	0.52	4.23	-83.25	125.0	89.8	17.1
7.54	4.67	0.94	28.0	0.70	19.6	-0.43	0.27	0.25	1.00	1.00	-0.25	0.25	-0.68	0.52	4.25	-83.51	124.7	90.0	17.1
7.45	4.67	0.93	28.0	0.70	19.6	-0.43	0.26	0.25	1.00	1.00	-0.25	0.25	-0.68	0.51	4.26	-83.76	124.5	90.2	17.1
7.37	4.67	0.92	28.0	0.70	19.6	-0.42	0.26	0.25	1.00	1.00	-0.25	0.25	-0.67	0.51	4.28	-84.01	124.2	90.4	17.1
7.29	4.67	0.91	28.0	0.70	19.6	-0.42	0.26	0.25	1.00	1.00	-0.25	0.25	-0.67	0.51	4.30	-84.26	124.0	90.6	17.0
7.21	4.67	0.90	28.0	0.70	19.6	-0.41	0.26	0.25	1.00	1.00	-0.25	0.25	-0.66	0.51	4.31	-84.51	123.7	90.8	17.0
7.13	4.67	0.89	28.0	0.70	19.6	-0.41	0.25	0.25	1.00	1.00	-0.25	0.25	-0.66	0.50	4.33	-84.76	123.5	91.0	17.0
7.05	4.67	0.88	28.0	0.70	19.6	-0.41	0.25	0.25	1.00	1.00	-0.25	0.25	-0.66	0.50	4.34	-85.00	123.2	91.2	17.0
6.97	4.67	0.87	28.0	0.70	19.6	-0.40	0.25	0.25	1.00	1.00	-0.25	0.25	-0.65	0.50	4.36	-85.25	123.0	91.4	17.0
6.89	4.67	0.86	28.0	0.70	19.6	-0.40	0.24	0.25	1.00	1.00	-0.25	0.25	-0.65	0.49	4.38	-85.49	122.7	91.6	16.9
6.81	4.67	0.85	28.0	0.70	19.6	-0.39	0.24	0.25	1.00	1.00	-0.25	0.25	-0.64	0.49	4.39	-85.73	122.5	91.8	16.9
6.73	4.67	0.83	28.0	0.70	19.6	-0.39	0.24	0.25	1.00	1.00	-0.25	0.25	-0.64	0.49	4.41	-85.97	122.3	92.0	16.9
6.65	4.67	0.82	28.0	0.70	19.6	-0.38	0.23	0.25	1.00	1.00	-0.25	0.25	-0.63	0.48	4.43	-86.20	122.0	92.2	16.9
6.57	4.67	0.81	28.0	0.70	19.6	-0.38	0.23	0.25	1.00	1.00	-0.25	0.25	-0.63	0.48	4.44	-86.44	121.8	92.4	16.9
6.49	4.67	0.80	28.0	0.70	19.6	-0.37	0.23	0.25	1.00	1.00	-0.25	0.25	-0.62	0.48	4.46	-86.67	121.6	92.6	16.8
6.41	4.67	0.79	28.0	0.70	19.6	-0.37	0.23	0.25	1.00	1.00	-0.25	0.25	-0.62	0.48	4.48	-86.90	121.3	92.8	16.8
6.33	4.67	0.78	28.0	0.70	19.6	-0.36	0.22	0.25	1.00	1.00	-0.25	0.25	-0.61	0.47	4.49	-87.13	121.1	93.0	16.8
6.25	4.67	0.77	28.0	0.70	19.6	-0.36	0.22	0.25	1.00	1.00	-0.25	0.25	-0.61	0.47	4.51	-87.36	120.9	93.2	16.8
6.17	4.67	0.76	28.0	0.70	19.6	-0.35	0.22	0.25	1.00	1.00	-0.25	0.25	-0.60	0.47	4.52	-87.58	120.6	93.4	16.8
6.09	4.67	0.75	28.0	0.70	19.6	-0.35	0.21	0.25	1.00	1.00	-0.25	0.25	-0.60	0.46	4.54	-87.81	120.4	93.6	16.7
6.01	4.67	0.74	28.0	0.70	19.6	-0.34	0.21	0.25	1.00	1.00	-0.25	0.25	-0.59	0.46	4.56	-88.03	120.2	93.8	16.7
5.93	4.67	0.73	28.0	0.70	19.6	-0.34	0.21	0.25	1.00	1.00	-0.25	0.25	-0.59	0.46	4.57	-88.25	120.0	93.9	16.7
5.85	4.67	0.72	28.0	0.70	19.6	-0.33	0.21	0.25	1.00	1.00	-0.25	0.25	-0.58	0.46	4.59	-88.47	119.8	94.1	16.7
5.77	4.67	0.71	28.0	0.70	19.6	-0.33	0.20	0.25	1.00	1.00	-0.25	0.25	-0.58	0.45	4.61	-88.69	119.5	94.3	16.7
5.69	4.67	0.70	28.0	0.70	19.6	-0.33	0.20	0.25	1.00	1.00	-0.25	0.25	-0.58	0.45	4.62	-88.90	119.3	94.5	16.6
5.61	4.67	0.69	28.0	0.70	19.6	-0.32	0.20	0.25	1.00	1.00	-0.25	0.25	-0.57	0.45	4.64	-89.11	119.1	94.7	16.6
5.53	4.67	0.68	28.0	0.70	19.6	-0.32	0.19	0.25	1.00	1.00	-0.25	0.25	-0.57	0.44	4.66	-89.33	118.9	94.9	16.6
5.45	4.67	0.67	28.0	0.70	19.6	-0.31	0.19	0.25	1.00	1.00	-0.25	0.25	-0.56	0.44	4.67	-89.54	118.7	95.1	16.6
5.37	4.67	0.66	28.0	0.70	19.6	-0.31	0.19	0.25	1.00	1.00	-0.25	0.25	-0.56	0.44	4.69	-89.74	118.5	95.2	16.6
5.29	4.67	0.65	28.0	0.70	19.6	-0.30	0.19	0.25	1.00	1.00	-0.25	0.25	-0.55	0.44	4.70	-89.95	118.3	95.4	16.6
5.21	4.67	0.64	28.0	0.70	19.6	-0.30	0.18	0.25	1.00	1.00	-0.25	0.25	-0.55	0.43	4.72	-90.15	118.1	95.6	16.5
5.13	4.67	0.63	28.0	0.70	19.6	-0.29	0.18	0.25	1.00	1.00	-0.25	0.25	-0.54	0.43	4.74	-90.36	117.9	95.8	16.5
5.05	4.67	0.62	28.0	0.70	19.6	-0.29	0.18	0.25	1.00	1.00	-0.25	0.25	-0.54	0.43	4.75	-90.56	117.7	95.9	16.5
4.97	4.67	0.61	28.0	0.70	19.6	-0.28	0.17	0.25	1.00	1.00	-0.25	0.25	-0.53	0.42	4.77	-90.76	117.5	96.1	16.5
4.89	4.67	0.60	28.0	0.70	19.6	-0.28	0.17	0.25	1.00	1.00	-0.25	0.25	-0.53	0.42	4.79	-90.96	117.3	96.3	16.5
4.81	4.67	0.59	28.0	0.70	19.6	-0.27	0.17	0.25	1.00	1.00	-0.25	0.25	-0.52	0.42	4.80	-91.15	117.1	96.5	16.5
4.73	4.67	0.58	28.0	0.70	19.6	-0.27	0.17	0.25	1.00	1.00	-0.25	0.25	-0.52	0.42	4.82	-91.35	116.9	96.6	16.5
4.65	4.67	0.57	28.0	0.70	19.6	-0.26	0.16	0.25	1.00	1.00	-0.25	0.25	-0.51	0.41	4.84	-91.54	116.7	96.8	16.4
4.57	4.67	0.56	28.0	0.70	19.6	-0.26	0.16	0.25	1.00	1.00	-0.25	0.25	-0.51	0.41	4.85	-91.73	116.5	97.0	16.4
4.49	4.67	0.55	28.0	0.70	19.6	-0.25	0.16	0.25	1.00	1.00	-0.25	0.25	-0.50	0.41	4.87	-91.92	116.3	97.1	16.4
4.41	4.67	0.54	28.0	0.70	19.6	-0.25	0.15	0.25	1.00	1.00	-0.25	0.25	-0.50	0.40	4.88	-92.10	116.1	97.3	16.4
4.33	4.67	0.53	28.0	0.70	19.6	-0.25	0.15	0.25	1.00	1.00	-0.25	0.25	-0.50	0.40	4.90	-92.29	115.9	97.5	16.4
4.25	4.67	0.52	28.0	0.70	19.6	-0.24	0.15	0.25	1.00	1.00	-0.25	0.25	-0.49	0.40	4.92	-92.47	115.8	97.6	16.4
4.17	4.67	0.51	28.0	0.70	19.6	-0.24	0.15	0.25	1.00	1.00	-0.25	0.25	-0.49	0.40	4.93	-92.65	115.6	97.8	16.4
4.09	4.67	0.50	28.0	0.70	19.6	-0.23	0.14	0.25	1.00	1.00	-0.25	0.25	-0.48	0.39	4.95	-92.83	115.4	98.0	16.4
4.01	4.67	0.49	28.0	0.70	19.6	-0.23	0.14	0.25	1.00	1.00	-0.25	0.25	-0.48	0.39	4.97	-93.01	115.2	98.1	16.3
3.93	4.67	0.48	28.0	0.70	19.6	-0.22	0.14	0.25	1.00	1.00	-0.25	0.25	-0.47	0.39	4.98	-93.19	115.0	98.3	16.3
3.85	4.67	0.47	28.0	0.70	19.6	-0.22	0.13	0.25	1.00	1.00	-0.25	0.25	-0.47	0.38	5.00	-93.36	114.9	98.5	16.3
3.77	4.67	0.46	28.0	0.70	19.6	-0.21	0.13	0.25	1.00	1.00	-0.25	0.25	-0.46	0.38	5.02	-93.54	114.7	98.6	16.3
3.69	4.67	0.45	28.0	0.70	19.6	-0.21	0.13	0.25	1.00	1.00	-0.25	0.25	-0.46	0.38	5.03	-93.71	114.5	98.8	16.3
3.61	4.67	0.44	28.0	0.70	19.6	-0.20	0.12	0.25	1.00	1.00	-0.25	0.25	-0.45	0.37	5.05	-93.88	114.4	98.9	16.3
3.53	4.67	0.43	28.0	0.70	19.6	-0.20	0.12	0.25	1.00	1.00	-0.25	0.25	-0.45	0.37	5.06	-94.05	114.2	99.1	16.3
3.45	4.67	0.42	0.0	0.70	0.0	0.00	0.00	0.50	1.00	1.00	0.00	0.00	0.00	0.00	5.08	-94.05	114.2	99.1	16.3

3.37	4.67	0.41	0.0	0.70	0.0	0.00	0.00	0.50	1.00	1.00	0.00	0.00	0.00	0.00	5.10	-94.05	114.2	99.1	16.3
3.29	4.67	0.40	0.0	0.70	0.0	0.00	0.00	0.50	1.00	1.00	0.00	0.00	0.00	0.00	5.11	-94.05	114.2	99.1	16.3
3.21	4.67	0.39	0.0	0.70	0.0	0.00	0.00	0.50	1.00	1.00	0.00	0.00	0.00	0.00	5.13	-94.05	114.2	99.2	16.3
3.13	4.67	0.38	0.0	0.70	0.0	0.00	0.00	0.50	1.00	1.00	0.00	0.00	0.00	0.00	5.15	-94.05	114.2	99.2	16.3
3.05	4.67	0.37	0.0	0.70	0.0	0.00	0.00	0.50	1.00	1.00	0.00	0.00	0.00	0.00	5.16	-94.05	114.2	99.2	16.3
2.97	4.67	0.36	0.0	0.70	0.0	0.00	0.00	0.50	1.00	1.00	0.00	0.00	0.00	0.00	5.18	-94.05	114.2	99.2	16.3
2.89	4.67	0.35	0.0	0.70	0.0	0.00	0.00	0.50	1.00	1.00	0.00	0.00	0.00	0.00	5.20	-94.05	114.2	99.2	16.3
2.81	4.67	0.34	0.0	0.70	0.0	0.00	0.00	0.50	1.00	1.00	0.00	0.00	0.00	0.00	5.21	-94.05	114.2	99.2	16.3
2.73	4.67	0.33	0.0	0.70	0.0	0.00	0.00	0.50	1.00	1.00	0.00	0.00	0.00	0.00	5.23	-94.05	114.2	99.2	16.3
2.65	4.67	0.32	0.0	0.70	0.0	0.00	0.00	0.50	1.00	1.00	0.00	0.00	0.00	0.00	5.24	-94.05	114.2	99.3	16.3
2.57	4.67	0.31	0.0	0.70	0.0	0.00	0.00	0.50	1.00	1.00	0.00	0.00	0.00	0.00	5.26	-94.05	114.2	99.3	16.3
2.48	4.67	0.30	0.0	0.70	0.0	0.00	0.00	0.50	1.00	1.00	0.00	0.00	0.00	0.00	5.28	-94.05	114.2	99.3	16.3
2.40	4.67	0.29	0.0	0.70	0.0	0.00	0.00	0.50	1.00	1.00	0.00	0.00	0.00	0.00	5.29	-94.05	114.2	99.3	16.3
2.32	4.67	0.28	0.0	0.70	0.0	0.00	0.00	0.50	1.00	1.00	0.00	0.00	0.00	0.00	5.31	-94.05	114.2	99.3	16.3
2.24	4.67	0.27	0.0	0.70	0.0	0.00	0.00	0.50	1.00	1.00	0.00	0.00	0.00	0.00	5.33	-94.05	114.2	99.3	16.3
2.16	4.67	0.26	0.0	0.70	0.0	0.00	0.00	0.50	1.00	1.00	0.00	0.00	0.00	0.00	5.34	-94.05	114.2	99.4	16.3
2.08	4.67	0.25	0.0	0.70	0.0	0.00	0.00	0.50	1.00	1.00	0.00	0.00	0.00	0.00	5.36	-94.05	114.2	99.4	16.3
2.00	4.67	0.25	0.0	0.70	0.0	0.00	0.00	0.50	1.00	1.00	0.00	0.00	0.00	0.00	5.38	-94.05	114.2	99.4	16.3
1.92	4.67	0.24	0.0	0.70	0.0	0.00	0.00	0.50	1.00	1.00	0.00	0.00	0.00	0.00	5.39	-94.05	114.2	99.4	16.3
1.84	4.67	0.23	0.0	0.70	0.0	0.00	0.00	0.50	1.00	1.00	0.00	0.00	0.00	0.00	5.41	-94.05	114.2	99.4	16.3
1.76	4.67	0.22	0.0	0.70	0.0	0.00	0.00	0.50	1.00	1.00	0.00	0.00	0.00	0.00	5.42	-94.05	114.2	99.4	16.3
1.68	4.67	0.21	0.0	0.70	0.0	0.00	0.00	0.50	1.00	1.00	0.00	0.00	0.00	0.00	5.44	-94.05	114.2	99.5	16.3
1.60	4.67	0.20	0.0	0.70	0.0	0.00	0.00	0.50	1.00	1.00	0.00	0.00	0.00	0.00	5.46	-94.05	114.2	99.5	16.3
1.52	4.67	0.19	0.0	0.70	0.0	0.00	0.00	0.50	1.00	1.00	0.00	0.00	0.00	0.00	5.47	-94.05	114.2	99.5	16.3
1.44	4.67	0.18	0.0	0.70	0.0	0.00	0.00	0.50	1.00	1.00	0.00	0.00	0.00	0.00	5.49	-94.05	114.2	99.5	16.3
1.36	4.67	0.17	0.0	0.70	0.0	0.00	0.00	0.50	1.00	1.00	0.00	0.00	0.00	0.00	5.51	-94.05	114.2	99.5	16.3
1.28	4.67	0.16	0.0	0.70	0.0	0.00	0.00	0.50	1.00	1.00	0.00	0.00	0.00	0.00	5.52	-94.05	114.2	99.5	16.3
1.20	4.67	0.15	0.0	0.70	0.0	0.00	0.00	0.50	1.00	1.00	0.00	0.00	0.00	0.00	5.54	-94.05	114.2	99.6	16.3
1.12	4.67	0.14	0.0	0.70	0.0	0.00	0.00	0.50	1.00	1.00	0.00	0.00	0.00	0.00	5.55	-94.05	114.2	99.6	16.3
1.04	4.67	0.13	0.0	0.70	0.0	0.00	0.00	0.50	1.00	1.00	0.00	0.00	0.00	0.00	5.57	-94.05	114.2	99.6	16.3
0.96	4.67	0.12	0.0	0.70	0.0	0.00	0.00	0.50	1.00	1.00	0.00	0.00	0.00	0.00	5.59	-94.05	114.2	99.6	16.3
0.88	4.67	0.11	0.0	0.70	0.0	0.00	0.00	0.50	1.00	1.00	0.00	0.00	0.00	0.00	5.60	-94.05	114.2	99.6	16.3
0.80	4.67	0.10	0.0	0.70	0.0	0.00	0.00	0.50	1.00	1.00	0.00	0.00	0.00	0.00	5.62	-94.05	114.2	99.6	16.3
0.72	4.67	0.09	0.0	0.70	0.0	0.00	0.00	0.50	1.00	1.00	0.00	0.00	0.00	0.00	5.64	-94.05	114.2	99.7	16.3
0.64	4.67	0.08	0.0	0.70	0.0	0.00	0.00	0.50	1.00	1.00	0.00	0.00	0.00	0.00	5.65	-94.05	114.2	99.7	16.3
0.56	4.67	0.07	0.0	0.70	0.0	0.00	0.00	0.50	1.00	1.00	0.00	0.00	0.00	0.00	5.67	-94.05	114.2	99.7	16.3
0.48	4.67	0.06	0.0	0.70	0.0	0.00	0.00	0.50	1.00	1.00	0.00	0.00	0.00	0.00	5.69	-94.05	114.2	99.7	16.3
0.40	4.67	0.05	0.0	0.70	0.0	0.00	0.00	0.50	1.00	1.00	0.00	0.00	0.00	0.00	5.70	-94.05	114.2	99.7	16.3
0.32	4.67	0.04	0.0	0.70	0.0	0.00	0.00	0.50	1.00	1.00	0.00	0.00	0.00	0.00	5.72	-94.05	114.2	99.7	16.3
0.24	4.67	0.03	0.0	0.70	0.0	0.00	0.00	0.50	1.00	1.00	0.00	0.00	0.00	0.00	5.73	-94.05	114.2	99.8	16.3
0.16	4.67	0.02	0.0	0.70	0.0	0.00	0.00	0.50	1.00	1.00	0.00	0.00	0.00	0.00	5.75	-94.05	114.2	99.8	16.3
0.08	4.67	0.01	0.0	0.70	0.0	0.00	0.00	0.50	1.00	1.00	0.00	0.00	0.00	0.00	5.77	-94.05	114.2	99.8	16.3
0.00	4.67	0.00	0.0	0.70	0.0	0.00	0.00	0.50	1.00	1.00	0.00	0.00	0.00	0.00	5.78	-94.05	114.2	99.8	16.3

SETTLEMENT based on Ultimate Loading by Vesic Method (1977):
Ztip=40.00 Btip= 1.17 Cp= 0.030 Cs= 0.056
Xpp=0.420-in Xps= 0.000-in Xtip= 0.420-in
Cp & Cs are average value at bearing stratum from pile tip extend to 10 Btip

At loading: Qtip=164.4-kp Qtop= 114.2-kp Qside= -50.2-kp
Xtip=0.420-in Xtop= 0.546-in Xshaft= 0.126-in

LOAD - TOTAL SETTLEMENT RELATION (from t-z, and q-w curves):
Based on Vesic Method (1977)

Xtop -in	Xshaft -in	Xtip -in	Qtip -kp	Qside -kp	Qtotal -kp
0.0001	0.0001	0.0000	0.2	-0.1	0.1
0.0015	-0.0014	0.0029	2.6	-8.6	-6.0
0.0034	-0.0024	0.0058	5.0	-15.8	-10.9
0.0057	-0.0030	0.0087	7.3	-22.0	-14.7
0.0084	-0.0032	0.0116	9.7	-27.2	-17.5
0.0115	-0.0031	0.0145	12.1	-31.7	-19.6
0.0148	-0.0026	0.0174	14.4	-35.4	-20.9
0.0184	-0.0020	0.0203	16.8	-38.4	-21.6
0.0222	-0.0011	0.0233	19.2	-40.9	-21.8
0.0262	0.0000	0.0262	21.5	-43.0	-21.5
0.0303	0.0012	0.0291	23.8	-44.7	-20.9
0.0345	0.0026	0.0320	26.2	-46.0	-19.9
0.0389	0.0040	0.0349	28.5	-47.1	-18.6
0.0433	0.0055	0.0378	30.8	-47.9	-17.2
0.0478	0.0071	0.0407	33.0	-48.6	-15.5
0.0524	0.0088	0.0436	35.3	-49.1	-13.8
0.0570	0.0105	0.0465	37.5	-49.4	-11.9
0.0616	0.0122	0.0494	39.8	-49.7	-9.9
0.0662	0.0139	0.0523	42.0	-49.9	-7.9
0.0708	0.0156	0.0552	44.2	-50.0	-5.9
0.0755	0.0173	0.0581	46.3	-50.1	-3.8
0.0801	0.0191	0.0610	48.5	-50.2	-1.7
0.0847	0.0208	0.0639	50.6	-50.2	0.4
0.0893	0.0225	0.0669	52.7	-50.2	2.5
0.0939	0.0242	0.0698	54.7	-50.2	4.5
0.0985	0.0259	0.0727	56.8	-50.1	6.6
0.1031	0.0275	0.0756	58.8	-50.1	8.7
0.1077	0.0292	0.0785	60.8	-50.0	10.7
0.1122	0.0308	0.0814	62.7	-50.0	12.8
0.1167	0.0324	0.0843	64.7	-49.9	14.8
0.1212	0.0340	0.0872	66.6	-49.8	16.8
0.1257	0.0356	0.0901	68.5	-49.7	18.8
0.1302	0.0372	0.0930	70.3	-49.6	20.8
0.1346	0.0387	0.0959	72.1	-49.4	22.7
0.1391	0.0402	0.0988	73.9	-49.3	24.6
0.1435	0.0417	0.1017	75.7	-49.2	26.5
0.1478	0.0432	0.1046	77.4	-49.1	28.4
0.1522	0.0446	0.1075	79.2	-49.0	30.2
0.1565	0.0460	0.1105	80.8	-49.0	31.9
0.1607	0.0474	0.1134	82.5	-48.9	33.6
0.1650	0.0487	0.1163	84.1	-48.9	35.3
0.1692	0.0501	0.1192	85.7	-48.8	36.9
0.1735	0.0514	0.1221	87.3	-48.7	38.6
0.1777	0.0527	0.1250	88.9	-48.6	40.2
0.1819	0.0540	0.1279	90.4	-48.5	41.8
0.1860	0.0552	0.1308	91.9	-48.4	43.4
0.1902	0.0565	0.1337	93.3	-48.3	45.0
0.1943	0.0577	0.1366	94.8	-48.2	46.6
0.1984	0.0589	0.1395	96.2	-48.1	48.1
0.2025	0.0601	0.1424	97.6	-47.9	49.7
0.2066	0.0613	0.1453	98.9	-47.8	51.2
0.2107	0.0624	0.1482	100.3	-47.6	52.7
0.2147	0.0636	0.1511	101.6	-47.5	54.1
0.2187	0.0647	0.1541	102.9	-47.3	55.6
0.2227	0.0658	0.1570	104.1	-47.2	57.0
0.2267	0.0668	0.1599	105.4	-47.0	58.4
0.2307	0.0679	0.1628	106.6	-46.9	59.7
0.2346	0.0689	0.1657	107.8	-46.7	61.1
0.2385	0.0699	0.1686	109.0	-46.6	62.4
0.2424	0.0709	0.1715	110.1	-46.4	63.7

0.2463	0.0719	0.1744	111.2	-46.3	64.9
0.2502	0.0729	0.1773	112.3	-46.2	66.1
0.2540	0.0738	0.1802	113.4	-46.1	67.3
0.2578	0.0747	0.1831	114.5	-46.0	68.5
0.2616	0.0756	0.1860	115.5	-45.9	69.6
0.2654	0.0764	0.1889	116.6	-45.9	70.7
0.2691	0.0773	0.1918	117.6	-45.8	71.8
0.2729	0.0781	0.1947	118.6	-45.7	72.8
0.2766	0.0789	0.1977	119.5	-45.7	73.9
0.2803	0.0798	0.2006	120.5	-45.6	74.9
0.2840	0.0806	0.2035	121.4	-45.5	75.9
0.2877	0.0813	0.2064	122.3	-45.4	77.0
0.2914	0.0821	0.2093	123.2	-45.2	78.0
0.2951	0.0829	0.2122	124.1	-45.1	79.1
0.2988	0.0837	0.2151	125.0	-44.8	80.2
0.3026	0.0846	0.2180	125.9	-44.5	81.3
0.3061	0.0852	0.2209	126.7	-44.7	82.0
0.3097	0.0859	0.2238	127.5	-44.7	82.8
0.3133	0.0866	0.2267	128.4	-44.6	83.7
0.3169	0.0872	0.2296	129.2	-44.6	84.6
0.3204	0.0879	0.2325	129.9	-44.6	85.4
0.3240	0.0886	0.2354	130.7	-44.5	86.2
0.3275	0.0892	0.2383	131.5	-44.5	87.0
0.3311	0.0898	0.2413	132.3	-44.4	87.8
0.3346	0.0905	0.2442	133.0	-44.4	88.6
0.3381	0.0911	0.2471	133.7	-44.3	89.4
0.3417	0.0917	0.2500	134.5	-44.3	90.2
0.3452	0.0923	0.2529	135.2	-44.2	90.9
0.3487	0.0929	0.2558	135.9	-44.2	91.7
0.3522	0.0935	0.2587	136.6	-44.1	92.4
0.3556	0.0940	0.2616	137.2	-44.1	93.2
0.3591	0.0946	0.2645	137.9	-44.0	93.9
0.3626	0.0952	0.2674	138.6	-44.0	94.6
0.3661	0.0957	0.2703	139.3	-43.9	95.3
0.3695	0.0963	0.2732	139.9	-43.9	96.0
0.4335	0.1056	0.3279	150.9	-43.0	107.9
0.4955	0.1129	0.3825	159.4	-42.1	117.3
0.5545	0.1174	0.4372	164.4	-41.2	123.1
0.6090	0.1172	0.4918	163.7	-40.4	123.3
0.6579	0.1115	0.5464	156.3	-39.5	116.9

At Qwork= 29.00-kp Settlement= 0.14930-in
At Qwork= 29.00-kp Secant Stiffness Kqx= 194.25-kp/-in
At Xallow= 1.00-in Q= 99999.00-kp
Note: If the program cannot find a result or the result exceeds the upper limit. The result will be displayed as 99999.

SUMMARY:

Total Ultimate Capacity (Down)= 114.184-kp Total Ultimate Capacity (Up)= 99.805-kp
Total Allowable Capacity (Down)= 29.695-kp Total Allowable Capacity (Up)= 52.794-kp

Weight above Ground= 0.00 Total Pile Weight= 5.78-kp *Soil Weight is not included
Side Resistance (Down)= -50.200-kp Side Resistance (Up)= 94.021-kp
Tip Resistance (Down)= 164.384-kp Tip Resistance (Up)= 0.000-kp
Negative Friction, Qneg= -94.045-kp, which has been subtracted from Total Ultimate Capacity (Down)
Negative friction does not affect Total Uplift Ultimate Capacity (Up)

OK! Qallow > Q * Vertical Load, Q= 29.0 -kp

FACTOR OF SAFETY:

FSside	FStip	FSup	FSweight
2.0	3.0	2.0	1.0

* FStorsion = FSside

Notes:
* Settlement in the program is Elastic Settlement only. Consolidation Settlement is not calculated!
Length - Pile length, distance from pile top to tip (not from ground surface)
Width or D - Width of pile shaft (pile diameter)
Ds and Dl - Short Side and Long Side of Footing
Area - Section area of pile shaft or tip area of pile
Sv - Vertical stress in soils (It may be limited based on critical depth, Z_lim or Z/D
qult - Ultimate tip resistance (pressure)
Qtip_dw - Ultimate downward tip resistance (Force or Capacity)
Qtip_up - Ultimate uplift tip resistance for belled pile or uplift plate (Force or Capacity)
Torsion - Ultimate torsion resistance for single pile (Capacity)
dz - Small Segment of Depth for Calculation
Zs - Soil Depth, Depth from ground surface
Zp - Pile Depth, Depth from pile top
Prem - Primer of pile shaft
Phi - Soil internal friction angle (between soils)
Kf - Friction factor to convert Phi to Delta
Delta - Ski friction between soil and pile (function of Phi. It is different from Phi)
f_dw - Downward Resistance between soil and pile from Delta
f_up - Uplift Resistance between soil and pile from Delta
C - Soil cohesion (between soils)
Ca - Adhesion between soil and pile (function of C. It is different from C) Ca=KaKcC
Ka - Adhesion ratio, C/Ca
Kc - Adhesion factor defended by users
Ca_dw - Downward adhesion between pile and soil
Ca_up - Uplift adhesion between pile and soil
Sf_dw - Downward side resistance (sum of friction and adhesion, f_dw + Ca_dw)
Sf_up - Uplift side resistance (sum of friction and adhesion, f_up + Ca_up)
Torsion side resistance = (Sf_dw+Sf_up)/2 * pile diameter/2
Weight - Weight of Pile shaft
Qneg - negative friction Resistance
Qside - Ultimate side resistance (Qside_dw or Qside_up)
Qtip - Ultimate tip resistance (Qtip_dw or Qtip_up for uplift plate)
Q_dw - Ultimate downward capacity (Qtip + Qside_dw)
Q_up - Ultimate uplift capacity (Weight + Qside_up)
E - Elastic modules
Xs - Settlement due to axial deformation of pile shaft
Xpp - Settlement due to point load from pile tip
Xps- Settlement due to load from pile shaft
Xtop - Total settlement, Xs + Xpp + Xps
Xtip - Tip settlement, Xpp + Xps
Xshaft - Shaft deformation, Xs
Xallow - Allowable settlement specified by users
Qwork - Vertical working load applied to pile
Qallow - Vertical allowable load, Qult/F.S.

VERTICAL ANALYSIS

Figure 1

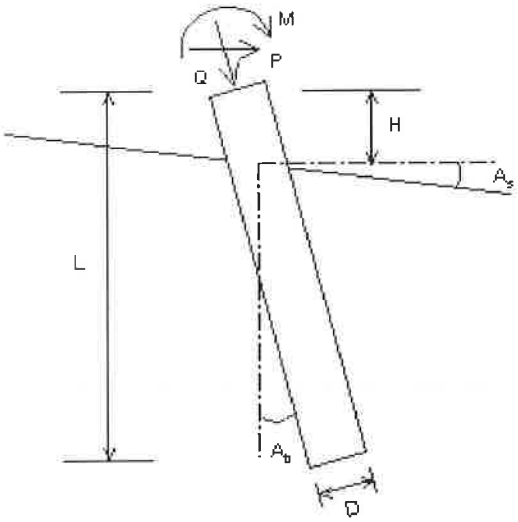

Driving Concrete Pile

Loads:
Load Factor for Vertical Loads= 1.0
Load Factor for Lateral Loads= 1.0
Loads Supported by Pile Cap= 0 %
Shear Condition: Static

(with Load Factor)
Vertical Load, Q= 165.0 -kp

Profile:
Pile Length, L= 47.0 -ft
Top Height, H= 0 -ft
Slope Angle, As= 0
Batter Angle, Ab= 0

* Zero Friction *
Zero Friction Start: 0 -ft End: 4.5 -ft
* Negative Friction *
Negative Friction Start: 4.5 -ft End: 12 -ft with Factor: 1
Negative Friction Start: 22 -ft End: 24.5 -ft with Factor: 1

Soil Data:

Depth -ft	Gamma -lb/f3	Phi	C -kp/f2	K -lb/i3	e50 or Dr %	Nspt
0	120.0	0.0	0.500	272.0	0.92	9
3.5	108.0	0.0	0.750	276.5	0.92	9
12	120.0	34	0.00	90.6	49.45	17
13	58.7	34	0.00	64.1	52.46	19
22	70.6	0.0	1.500	921.9	0.54	22
24.5	71.1	30	1.000	1031.5	0.51	24
42	74.5	37	0.00	197.2	95.94	60

Pile Data:

Depth -ft	Width -in	Area -in2	Per. -in	I -in4	E -kp/i2	Weight -kp/f
0.0	14	196.0	56.0	3201.3	3000	0.204
47.0						

Vertical Capacity:
Weight above Ground= 0.00 Total Weight= 6.71-kp *Soil Weight is not included
Side Resistance (Down)= 197.939-kp Side Resistance (Up)= 224.442-kp
Tip Resistance (Down)= 213.063-kp Tip Resistance (Up)= 0.000-kp
Total Ultimate Capacity (Down) Qult= 411.003-kp Total Ultimate Capacity (Up)= 231.150-kp
Total Allowable Capacity (Down) Qallow= 169.991-kp Total Allowable Capacity (Up) Qallow= 118.929-kp
OK! Qallow > Q

Settlement Calculation:
At Q= 165.00-kp Settlement= 0.11564-in
At Xallow= 1.00-in Q= 369.16275-kp

Note: If the program cannot find a result or the result exceeds the upper limit. The result will be displayed as 99999.

ALLOWABLE CAPACITY vs FOUNDATION DEPTH

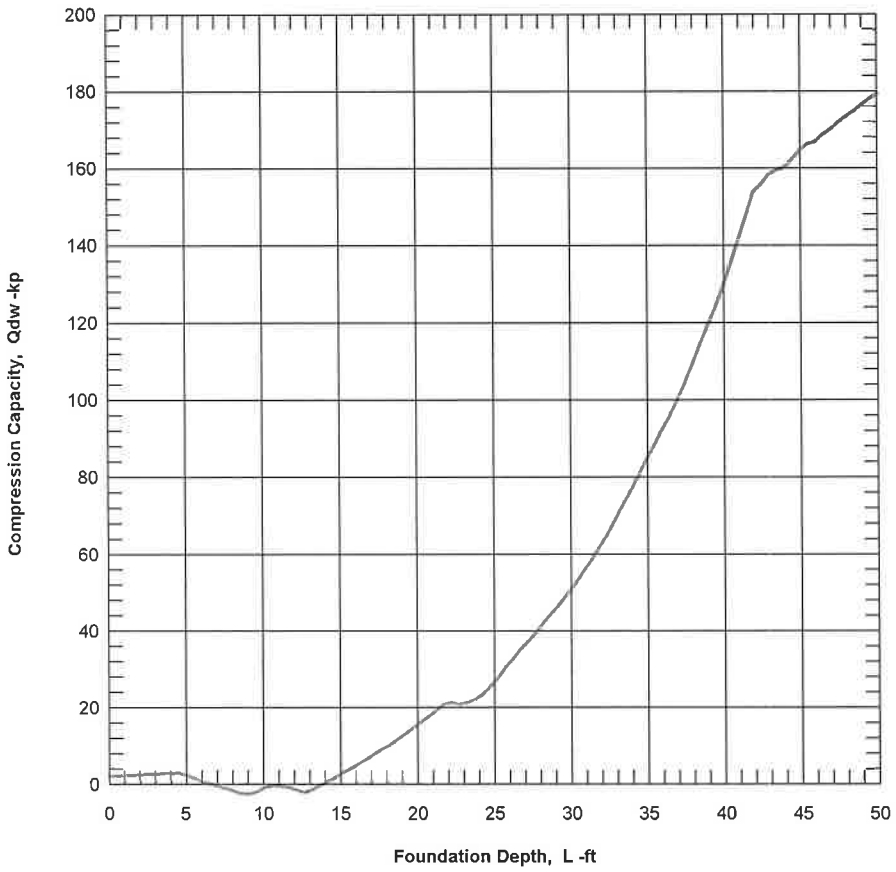

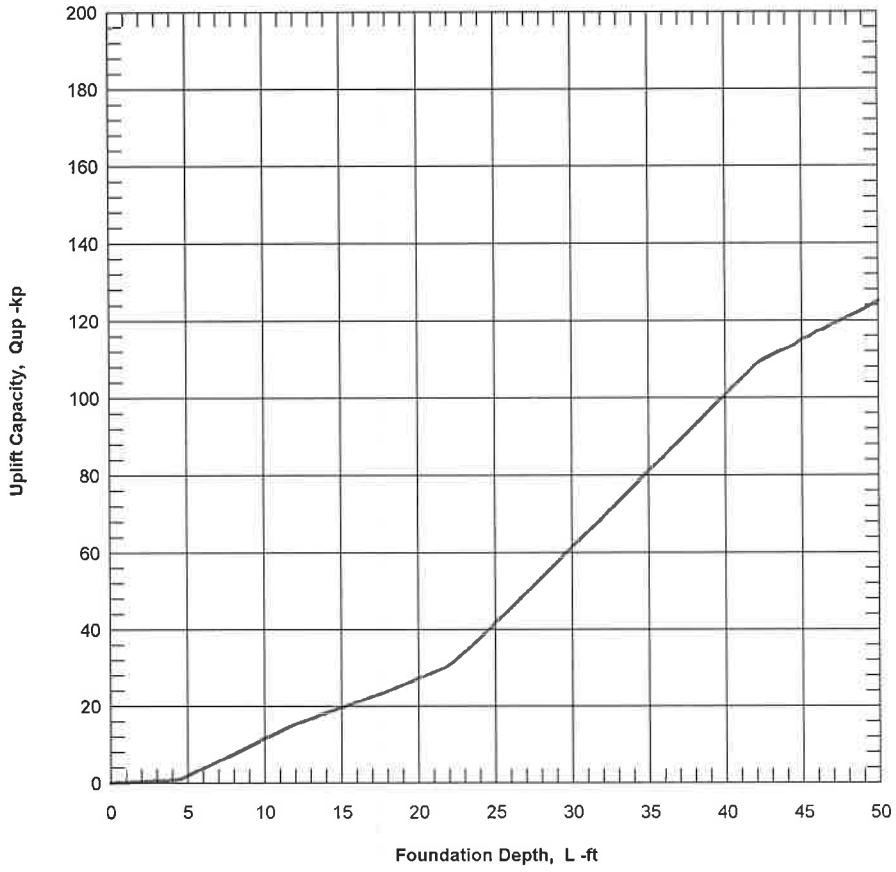

CivilTech Software

16G136 - 14-in square Driven Conc. Pile
47-ft-deep; Using B-2 data

Figure 1

```
*************************************************************
                    ALLPILE 7
       VERTICAL ANALYSIS DETAILED OUTPUT
        Copyright by CivilTech Software
                www.civiltech.com
*************************************************************
Licensed to
Date: 7/8/2019  File: P:\Geotechnical\2016 Geotechnical\16G136 Alston 2 CI Bldgs Long Beach\Deep Foundation Design\Apr 28 2016\Boring B-2\14insquare_47ftdeep_driven pile_01.alp
1.0

Title 1: 16G136 - 14-in square Driven Conc. Pile
Title 2: 47-ft-deep; Using B-2 data

ALLPILE INPUT DATA:
**_____________________________________________________**

* Pile Type Page *
Unit: English
Displacement pile: Higher friction. Stinger helps smoothen driving.  Pile has two sections.  H-section on tip.
Pile Type: Driving Concrete Pile

* Pile Profile *
Foundation Depth: 47.0 -ft
Top Height: 0 -ft
Slope Angle: 0
Pile Angle: 0

* Pile Properties *
Zs      Width   Area    Perim.    I       E       Weight  Mix     Out     In      Other.  Type
-ft     -in     -in2    -in       -in4    -kp/i2  -kp/f   %       Side    Side    Par.
_____________________________________________________________________________________________
0.0     14      196.0   56.0      3201.3  3000    0.204   0.0     4       4       0       Concrete (smooth)
47.0                                                                                      Pile Tip
Note:  Mix = % of Inside material/Outside material

Group Type: 0
Top Type: 1

Water Table: 13 -ft
Ground Elevation: 0 -ft

* Soil Properties *
Zs      Gamma   Phi     C       K       E50/Dr  Nspt    Type    Soil
-ft     -lb/f3  o       -kp/f2  -lb/i3   - %
0.0     120.0   0.0     0.500   272.0   0.92    9       3       Fill
3.5     108.0   0.0     0.750   276.5   0.92    9       1       Alluvium
12.0    120.0   34      0.00    90.6    49.45   17      4       Alluvium
13.0    58.7    34      0.00    64.1    52.46   19      4       Alluvium
22.0    70.6    0.0     1.500   921.9   0.54    22      2       Alluvium
24.5    71.1    30      1.000   1031.5  0.51    24      3       Alluvium
42.0    74.5    37      0.00    197.2   95.94   60      4       Alluvium

Surcharge Pressure on ground: 0 -kp/f2

* Zero Friction *
Zero Friction Start: 0 -ft      End: 4.5 -ft

* Negative Friction *
Negative Friction Start: 4.5 -ft        End: 12 -ft     with Factor: 1
Negative Friction Start: 22 -ft End: 24.5 -ft   with Factor: 1

ALLPILE ANALYSIS AND RESULTS:
**_____________________________________________________**

Pile Profile and Loading:
        Piletype: Driving Concrete Pile
        Pile Length, L= 47.0 -ft
        Top Height, H= 0 -ft
        Slope Angle, As= 0
        Batter Angle, Ab= 0.00

        *To consider the influence of different soils below the pile tip, bearing stratum is defined
        from pile tip extending to 10 Diameter of pile, which is 11.7-ft (Input Page F, Item 3)

Single Pile, Vertical Analysis:
        Vertical Load with Load factor, Q= 165.0 -kp
        Vertical Load with Load factor and Pile Cap, Q= 165.0 -kp
          Load Factor for Vertical Loads= 1.0
          Vertical Loads Supported by Pile Cap: 0 %
          Kdown= 1.3      Kup= 0.8        Ka= 1.00


From Ztip=47.0 to 58.7-ft  Average Properties: Es= 959.90-kp/f2  C=0.00-kp/f2  Friction=37.00 Cp=0.03  Ksand=1.00
Limits of Max. tip resistance, q_lim= N/A
Batter Angle, Ab= 0.00    Batter Factor, Kbat= 1.00
Qtip_dw=213.1-kp  based on qult=156.5-kp/f2  and Base Area=1.4-ft2
Qtip_up=0.0-kp  and Base Area=0.0-ft2


TIP RESISTANCE (Down) CALCULATION:
Tip Depth= 47.0-ft Critical Depth Ratio Z/D= 20 Critical Depth= 23.3-ft
Equivalent Width of Tip= 1.17-ft,    Tip Area= 1.36-ft2   Tip Diameter= 1.17-ft
Bearing stratum from pile tip extending to 10 Diameter of pile. Bearing stratum= 11.67-ft
Btip: width at pile tip= 1.17-ft (For group pile, it is equivalent width).
Phi & C are average value in bearing stratum.
Batter Angle= 0.00,    Batter Factor for Tip and Side= 1.00

Ztip    Z/D     Z_lim   q_lim   Width   Area'   Phi     C       Nq      Nc      Sv      qult    Qtip_dw
-ft             -ft     -kp/f2  -ft     -ft2    - o     -kp/f2                  -kp/f2  -kp/f2  -kp
_____________________________________________________________________________________________
47.0    20.0    23.3    N/A     1.17    1.36    37.0    0.00    75.0    9.0     2.1     156.5   213.1

 Ztip - Depth of pile tip from ground surface (Zs)
 D - Pile average diameter (below ground) for calculation of critical depth.  D=1.17-ft
 Z/D - Critical depth (for tip resistances) as ratio of depth/diameter. Vertical stress will be constant below critical depth
 Z_lim - Critical depth, calculated from Z/D (for tip resistances)
 q_lim -  Limit of Maximum tip resistance
 Btip: width or diameter at pile tip
 Bearing stratum: A stratum from  pile tip extending to some depth. Average soil properties in the stratum are used for bearing calculation


SIDE RESISTANCE (Uplift & Down) CALCULATION:
D       Z/D     Z_lim   Sf_lim  K_dw    K_up    dz
-ft             -ft     -kp/f2                  -ft
_____________________________________________
1.17    20.0    23.33   N/A     1.3     0.8     0.094
```

D - Pile average diameter for calculation of critical depth
Z/D - Critical depth (for side resistances) as ratio of depth/diameter. Vertical stress will be constant below critical depth
Z_lim - Critical depth calculated from Z/D (for side resistances)
Sf_lim - Limit of Maximum side resistance

Users Setting: Ka=1, which is constant. Ca=KcKaC=KcC

SIDE RESISTANCE (Up & Down) CALCULATION vs DEPTH:
Calculation is based on segment dZ= 0.09

Zs -ft	Prem -ft	Sv -kp/f2	Phi - o	Kf(<2) Delta	Delta - o	f_dw -kp/f2	f_up -kp/f2	C -kp/f2	Ka	Kc(<2) Ca	Ca_dw -kp/f2	Ca_up -kp/f2	Sf_dw -kp/f2	Sf_up -kp/f2	weight -kp	Qneg -kp	Q_dw -kp	Q_up -kp	Torsion -kp-f
47.00	4.67	2.09	37.0	0.70	25.9	1.32	0.81	0.00	1.00	1.00	0.00	0.00	0.00	0.00	0.00	0.00	213.1	0.0	0.0
46.91	4.67	2.09	37.0	0.70	25.9	1.32	0.81	0.00	1.00	1.00	0.00	0.00	1.32	0.81	0.01	0.00	213.6	0.4	0.3
46.81	4.67	2.09	37.0	0.70	25.9	1.32	0.81	0.00	1.00	1.00	0.00	0.00	1.32	0.81	0.02	0.00	214.2	0.7	0.7
46.72	4.67	2.09	37.0	0.70	25.9	1.32	0.81	0.00	1.00	1.00	0.00	0.00	1.32	0.81	0.03	0.00	214.8	1.1	1.0
46.62	4.67	2.09	37.0	0.70	25.9	1.32	0.81	0.00	1.00	1.00	0.00	0.00	1.32	0.81	0.04	0.00	215.4	1.5	1.4
46.53	4.67	2.09	37.0	0.70	25.9	1.32	0.81	0.00	1.00	1.00	0.00	0.00	1.32	0.81	0.06	0.00	216.0	1.8	1.7
46.43	4.67	2.09	37.0	0.70	25.9	1.32	0.81	0.00	1.00	1.00	0.00	0.00	1.32	0.81	0.07	0.00	216.5	2.2	2.1
46.34	4.67	2.09	37.0	0.70	25.9	1.32	0.81	0.00	1.00	1.00	0.00	0.00	1.32	0.81	0.08	0.00	217.1	2.6	2.4
46.25	4.67	2.09	37.0	0.70	25.9	1.32	0.81	0.00	1.00	1.00	0.00	0.00	1.32	0.81	0.09	0.00	217.7	2.9	2.8
46.15	4.67	2.09	37.0	0.70	25.9	1.32	0.81	0.00	1.00	1.00	0.00	0.00	1.32	0.81	0.10	0.00	218.3	3.3	3.1
46.06	4.67	2.09	37.0	0.70	25.9	1.32	0.81	0.00	1.00	1.00	0.00	0.00	1.32	0.81	0.11	0.00	218.9	3.7	3.5
45.96	4.67	2.09	37.0	0.70	25.9	1.32	0.81	0.00	1.00	1.00	0.00	0.00	1.32	0.81	0.12	0.00	219.4	4.0	3.8
45.87	4.67	2.09	37.0	0.70	25.9	1.32	0.81	0.00	1.00	1.00	0.00	0.00	1.32	0.81	0.13	0.00	220.0	4.4	4.2
45.78	4.67	2.09	37.0	0.70	25.9	1.32	0.81	0.00	1.00	1.00	0.00	0.00	1.32	0.81	0.15	0.00	220.6	4.8	4.5
45.68	4.67	2.09	37.0	0.70	25.9	1.32	0.81	0.00	1.00	1.00	0.00	0.00	1.32	0.81	0.16	0.00	221.2	5.1	4.9
45.59	4.67	2.09	37.0	0.70	25.9	1.32	0.81	0.00	1.00	1.00	0.00	0.00	1.32	0.81	0.17	0.00	221.7	5.5	5.2
45.49	4.67	2.09	37.0	0.70	25.9	1.32	0.81	0.00	1.00	1.00	0.00	0.00	1.32	0.81	0.18	0.00	222.3	5.9	5.6
45.40	4.67	2.09	37.0	0.70	25.9	1.32	0.81	0.00	1.00	1.00	0.00	0.00	1.32	0.81	0.19	0.00	222.9	6.2	5.9
45.30	4.67	2.09	37.0	0.70	25.9	1.32	0.81	0.00	1.00	1.00	0.00	0.00	1.32	0.81	0.20	0.00	223.5	6.6	6.3
45.21	4.67	2.09	37.0	0.70	25.9	1.32	0.81	0.00	1.00	1.00	0.00	0.00	1.32	0.81	0.21	0.00	224.1	7.0	6.6
45.12	4.67	2.09	37.0	0.70	25.9	1.32	0.81	0.00	1.00	1.00	0.00	0.00	1.32	0.81	0.22	0.00	224.6	7.4	6.9
45.02	4.67	2.09	37.0	0.70	25.9	1.32	0.81	0.00	1.00	1.00	0.00	0.00	1.32	0.81	0.24	0.00	225.2	7.7	7.3
44.93	4.67	2.09	37.0	0.70	25.9	1.32	0.81	0.00	1.00	1.00	0.00	0.00	1.32	0.81	0.25	0.00	225.8	8.1	7.6
44.83	4.67	2.09	37.0	0.70	25.9	1.32	0.81	0.00	1.00	1.00	0.00	0.00	1.32	0.81	0.26	0.00	226.4	8.5	8.0
44.74	4.67	2.09	37.0	0.70	25.9	1.32	0.81	0.00	1.00	1.00	0.00	0.00	1.32	0.81	0.27	0.00	227.0	8.8	8.3
44.65	4.67	2.09	37.0	0.70	25.9	1.32	0.81	0.00	1.00	1.00	0.00	0.00	1.32	0.81	0.28	0.00	227.5	9.2	8.7
44.55	4.67	2.09	37.0	0.70	25.9	1.32	0.81	0.00	1.00	1.00	0.00	0.00	1.32	0.81	0.29	0.00	228.1	9.6	9.0
44.46	4.67	2.09	37.0	0.70	25.9	1.32	0.81	0.00	1.00	1.00	0.00	0.00	1.32	0.81	0.30	0.00	228.7	9.9	9.4
44.36	4.67	2.09	37.0	0.70	25.9	1.32	0.81	0.00	1.00	1.00	0.00	0.00	1.32	0.81	0.31	0.00	229.3	10.3	9.7
44.27	4.67	2.09	37.0	0.70	25.9	1.32	0.81	0.00	1.00	1.00	0.00	0.00	1.32	0.81	0.33	0.00	229.9	10.7	10.1
44.17	4.67	2.09	37.0	0.70	25.9	1.32	0.81	0.00	1.00	1.00	0.00	0.00	1.32	0.81	0.34	0.00	230.4	11.0	10.4
44.08	4.67	2.09	37.0	0.70	25.9	1.32	0.81	0.00	1.00	1.00	0.00	0.00	1.32	0.81	0.35	0.00	231.0	11.4	10.8
43.99	4.67	2.09	37.0	0.70	25.9	1.32	0.81	0.00	1.00	1.00	0.00	0.00	1.32	0.81	0.36	0.00	231.6	11.8	11.1
43.89	4.67	2.09	37.0	0.70	25.9	1.32	0.81	0.00	1.00	1.00	0.00	0.00	1.32	0.81	0.37	0.00	232.2	12.1	11.5
43.80	4.67	2.09	37.0	0.70	25.9	1.32	0.81	0.00	1.00	1.00	0.00	0.00	1.32	0.81	0.38	0.00	232.7	12.5	11.8
43.70	4.67	2.09	37.0	0.70	25.9	1.32	0.81	0.00	1.00	1.00	0.00	0.00	1.32	0.81	0.39	0.00	233.3	12.9	12.2
43.61	4.67	2.09	37.0	0.70	25.9	1.32	0.81	0.00	1.00	1.00	0.00	0.00	1.32	0.81	0.40	0.00	233.9	13.2	12.5
43.52	4.67	2.09	37.0	0.70	25.9	1.32	0.81	0.00	1.00	1.00	0.00	0.00	1.32	0.81	0.41	0.00	234.5	13.6	12.9
43.42	4.67	2.09	37.0	0.70	25.9	1.32	0.81	0.00	1.00	1.00	0.00	0.00	1.32	0.81	0.43	0.00	235.1	14.0	13.2
43.33	4.67	2.09	37.0	0.70	25.9	1.32	0.81	0.00	1.00	1.00	0.00	0.00	1.32	0.81	0.44	0.00	235.6	14.3	13.5
43.23	4.67	2.09	37.0	0.70	25.9	1.32	0.81	0.00	1.00	1.00	0.00	0.00	1.32	0.81	0.45	0.00	236.2	14.7	13.9
43.14	4.67	2.09	37.0	0.70	25.9	1.32	0.81	0.00	1.00	1.00	0.00	0.00	1.32	0.81	0.46	0.00	236.8	15.1	14.2
43.04	4.67	2.09	37.0	0.70	25.9	1.32	0.81	0.00	1.00	1.00	0.00	0.00	1.32	0.81	0.47	0.00	237.4	15.4	14.6
42.95	4.67	2.09	37.0	0.70	25.9	1.32	0.81	0.00	1.00	1.00	0.00	0.00	1.32	0.81	0.48	0.00	238.0	15.8	14.9
42.86	4.67	2.09	37.0	0.70	25.9	1.32	0.81	0.00	1.00	1.00	0.00	0.00	1.32	0.81	0.49	0.00	238.5	16.2	15.3
42.76	4.67	2.09	37.0	0.70	25.9	1.32	0.81	0.00	1.00	1.00	0.00	0.00	1.32	0.81	0.50	0.00	239.1	16.5	15.6
42.67	4.67	2.09	37.0	0.70	25.9	1.32	0.81	0.00	1.00	1.00	0.00	0.00	1.32	0.81	0.52	0.00	239.7	16.9	16.0
42.57	4.67	2.09	37.0	0.70	25.9	1.32	0.81	0.00	1.00	1.00	0.00	0.00	1.32	0.81	0.53	0.00	240.3	17.3	16.3
42.48	4.67	2.09	37.0	0.70	25.9	1.32	0.81	0.00	1.00	1.00	0.00	0.00	1.32	0.81	0.54	0.00	240.9	17.6	16.7
42.38	4.67	2.09	37.0	0.70	25.9	1.32	0.81	0.00	1.00	1.00	0.00	0.00	1.32	0.81	0.55	0.00	241.4	18.0	17.0
42.29	4.67	2.09	37.0	0.70	25.9	1.32	0.81	0.00	1.00	1.00	0.00	0.00	1.32	0.81	0.56	0.00	242.0	18.4	17.4
42.20	4.67	2.09	37.0	0.70	25.9	1.32	0.81	0.00	1.00	1.00	0.00	0.00	1.32	0.81	0.57	0.00	242.6	18.7	17.7
42.10	4.67	2.09	37.0	0.70	25.9	1.32	0.81	0.00	1.00	1.00	0.00	0.00	1.32	0.81	0.58	0.00	243.2	19.1	18.1
42.01	4.67	2.09	37.0	0.70	25.9	1.32	0.81	0.00	1.00	1.00	0.00	0.00	1.32	0.81	0.59	0.00	243.7	19.5	18.4
41.91	4.67	2.09	30.0	0.70	21.0	1.04	0.64	1.00	1.00	1.00	1.00	1.00	2.04	1.64	0.61	0.00	244.6	20.2	19.0
41.82	4.67	2.09	30.0	0.70	21.0	1.04	0.64	1.00	1.00	1.00	1.00	1.00	2.04	1.64	0.62	0.00	245.5	20.9	19.6
41.73	4.67	2.09	30.0	0.70	21.0	1.04	0.64	1.00	1.00	1.00	1.00	1.00	2.04	1.64	0.63	0.00	246.4	21.7	20.2
41.63	4.67	2.09	30.0	0.70	21.0	1.04	0.64	1.00	1.00	1.00	1.00	1.00	2.04	1.64	0.64	0.00	247.3	22.4	20.8
41.54	4.67	2.09	30.0	0.70	21.0	1.04	0.64	1.00	1.00	1.00	1.00	1.00	2.04	1.64	0.65	0.00	248.2	23.1	21.4
41.44	4.67	2.09	30.0	0.70	21.0	1.04	0.64	1.00	1.00	1.00	1.00	1.00	2.04	1.64	0.66	0.00	249.1	23.9	22.0
41.35	4.67	2.09	30.0	0.70	21.0	1.04	0.64	1.00	1.00	1.00	1.00	1.00	2.04	1.64	0.67	0.00	250.0	24.6	22.6
41.25	4.67	2.09	30.0	0.70	21.0	1.04	0.64	1.00	1.00	1.00	1.00	1.00	2.04	1.64	0.68	0.00	250.9	25.3	23.2
41.16	4.67	2.09	30.0	0.70	21.0	1.04	0.64	1.00	1.00	1.00	1.00	1.00	2.04	1.64	0.70	0.00	251.8	26.1	23.8
41.07	4.67	2.09	30.0	0.70	21.0	1.04	0.64	1.00	1.00	1.00	1.00	1.00	2.04	1.64	0.71	0.00	252.7	26.8	24.4
40.97	4.67	2.09	30.0	0.70	21.0	1.04	0.64	1.00	1.00	1.00	1.00	1.00	2.04	1.64	0.72	0.00	253.6	27.5	25.0
40.88	4.67	2.09	30.0	0.70	21.0	1.04	0.64	1.00	1.00	1.00	1.00	1.00	2.04	1.64	0.73	0.00	254.5	28.3	25.6
40.78	4.67	2.09	30.0	0.70	21.0	1.04	0.64	1.00	1.00	1.00	1.00	1.00	2.04	1.64	0.74	0.00	255.4	29.0	26.2
40.69	4.67	2.09	30.0	0.70	21.0	1.04	0.64	1.00	1.00	1.00	1.00	1.00	2.04	1.64	0.75	0.00	256.3	29.7	26.8
40.60	4.67	2.09	30.0	0.70	21.0	1.04	0.64	1.00	1.00	1.00	1.00	1.00	2.04	1.64	0.76	0.00	257.2	30.5	27.4
40.50	4.67	2.09	30.0	0.70	21.0	1.04	0.64	1.00	1.00	1.00	1.00	1.00	2.04	1.64	0.77	0.00	258.1	31.2	28.0
40.41	4.67	2.09	30.0	0.70	21.0	1.04	0.64	1.00	1.00	1.00	1.00	1.00	2.04	1.64	0.79	0.00	259.0	31.9	28.6
40.31	4.67	2.09	30.0	0.70	21.0	1.04	0.64	1.00	1.00	1.00	1.00	1.00	2.04	1.64	0.80	0.00	259.9	32.7	29.2
40.22	4.67	2.09	30.0	0.70	21.0	1.04	0.64	1.00	1.00	1.00	1.00	1.00	2.04	1.64	0.81	0.00	260.8	33.4	29.8
40.12	4.67	2.09	30.0	0.70	21.0	1.04	0.64	1.00	1.00	1.00	1.00	1.00	2.04	1.64	0.82	0.00	261.7	34.1	30.4
40.03	4.67	2.09	30.0	0.70	21.0	1.04	0.64	1.00	1.00	1.00	1.00	1.00	2.04	1.64	0.83	0.00	262.6	34.9	31.0
39.94	4.67	2.09	30.0	0.70	21.0	1.04	0.64	1.00	1.00	1.00	1.00	1.00	2.04	1.64	0.84	0.00	263.5	35.6	31.6
39.84	4.67	2.09	30.0	0.70	21.0	1.04	0.64	1.00	1.00	1.00	1.00	1.00	2.04	1.64	0.85	0.00	264.4	36.3	32.2
39.75	4.67	2.09	30.0	0.70	21.0	1.04	0.64	1.00	1.00	1.00	1.00	1.00	2.04	1.64	0.86	0.00	265.3	37.1	32.8
39.65	4.67	2.09	30.0	0.70	21.0	1.04	0.64	1.00	1.00	1.00	1.00	1.00	2.04	1.64	0.87	0.00	266.2	37.8	33.4
39.56	4.67	2.09	30.0	0.70	21.0	1.04	0.64	1.00	1.00	1.00	1.00	1.00	2.04	1.64	0.89	0.00	267.1	38.5	34.0
39.46	4.67	2.09	30.0	0.70	21.0	1.04	0.64	1.00	1.00	1.00	1.00	1.00	2.04	1.64	0.90	0.00	268.0	39.3	34.6
39.37	4.67	2.09	30.0	0.70	21.0	1.04	0.64	1.00	1.00	1.00	1.00	1.00	2.04	1.64	0.91	0.00	268.9	40.0	35.2
39.28	4.67	2.09	30.0	0.70	21.0	1.04	0.64	1.00	1.00	1.00	1.00	1.00	2.04	1.64	0.92	0.00	269.8	40.7	35.8
39.18	4.67	2.09	30.0	0.70	21.0	1.04	0.64	1.00	1.00	1.00	1.00	1.00	2.04	1.64	0.93	0.00	270.7	41.5	36.4
39.09	4.67	2.09	30.0	0.70	21.0	1.04	0.64	1.00	1.00	1.00	1.00	1.00	2.04	1.64	0.94	0.00	271.6	42.2	37.0
38.99	4.67	2.09	30.0	0.70	21.0	1.04	0.64	1.00	1.00	1.00	1.00	1.00	2.04	1.64	0.95	0.00	272.5	42.9	37.6
38.90	4.67	2.09	30.0	0.70	21.0	1.04	0.64	1.00	1.00	1.00	1.00	1.00	2.04	1.64	0.96	0.00	273.4	43.6	38.2
38.81	4.67	2.09	30.0	0.70	21.0	1.04	0.64	1.00	1.00	1.00	1.00	1.00	2.04	1.64	0.98	0.00	274.3	44.4	38.8
38.71	4.67	2.09	30.0	0.70	21.0	1.04	0.64	1.00	1.00	1.00	1.00	1.00	2.04	1.64	0.99	0.00	275.2	45.1	39.4
38.62	4.67	2.09	30.0	0.70	21.0	1.04	0.64	1.00	1.00	1.00	1.00	1.00	2.04	1.64	1.00	0.00	276.1	45.8	40.0
38.52	4.67	2.09	30.0	0.70	21.0	1.04	0.64	1.00	1.00	1.00	1.00	1.00	2.04	1.64	1.01	0.00	276.9	46.6	40.6
38.43	4.67	2.09	30.0	0.70	21.0	1.04	0.64	1.00	1.00	1.00	1.00	1.00	2.04	1.64	1.02	0.00	277.8	47.3	41.2
38.33	4.67	2.09	30.0	0.70	21.0	1.04	0.64	1.00	1.00	1.00	1.00	1.00	2.04	1.64	1.03	0.00	278.7	48.0	41.8
38.24	4.67	2.09	30.0	0.70	21.0	1.04	0.64	1.00	1.00	1.00	1.00	1.00	2.04	1.64	1.04	0.00	279.6	48.8	42.4
38.15	4.67	2.09	30.0	0.70	21.0	1.04	0.64	1.00	1.00	1.00	1.00	1.00	2.04	1.64	1.05	0.00	280.5	49.5	43.1
38.05	4.67	2.09	30.0	0.70	21.0	1.04	0.64	1.00	1.00	1.00	1.00	1.00	2.04	1.64	1.07	0.00	281.4	50.2	43.7
37.96	4.67	2.09	30.0	0.70	21.0	1.04	0.64	1.00	1.00	1.00	1.00	1.00	2.04	1.64	1.08	0.00	282.3	51.0	44.3
37.86	4.67	2.09	30.0	0.70	21.0	1.04	0.64	1.00	1.00	1.00	1.00	1.00	2.04	1.64	1.09	0.00	283.2	51.7	44.9
37.77	4.67	2.09	30.0	0.70	21.0	1.04	0.64	1.00	1.00	1.00	1.00	1.00	2.04	1.64	1.10	0.00	284.1	52.4	45.5
37.68	4.67	2.09	30.0	0.70	21.0	1.04	0.64	1.00	1.00	1.00	1.00	1.00	2.04	1.64	1.11	0.00	285.0	53.2	46.1
37.58	4.67	2.09	30.0	0.70	21.0	1.04	0.64	1.00	1.00	1.00	1.00	1.00	2.04	1.64	1.12	0.00	285.9	53.9	46.7
37.49	4.67	2.09	30.0	0.70	21.0	1.04	0.64	1.00	1.00	1.00	1.00	1.00	2.04	1.64	1.13	0.00	286.8	54.6	47.3
37.39	4.67	2.09	30.0	0.70	21.0	1.04	0.64	1.00	1.00	1.00	1.00	1.00	2.04	1.64	1.14	0.00	287.7	55.4	47.9
37.30	4.67	2.09	30.0	0.70	21.0	1.04	0.64	1.00	1.00	1.00	1.00	1.00	2.04	1.64	1.16	0.00	288.6	56.1	48.5

37.20	4.67	2.09	30.0	0.70	21.0	1.04	0.64	1.00	1.00	1.00	1.00	1.00	2.04	1.64	1.17	0.00	289.5	56.8	49.1
37.11	4.67	2.09	30.0	0.70	21.0	1.04	0.64	1.00	1.00	1.00	1.00	1.00	2.04	1.64	1.18	0.00	290.4	57.6	49.7
37.02	4.67	2.09	30.0	0.70	21.0	1.04	0.64	1.00	1.00	1.00	1.00	1.00	2.04	1.64	1.19	0.00	291.3	58.3	50.3
36.92	4.67	2.09	30.0	0.70	21.0	1.04	0.64	1.00	1.00	1.00	1.00	1.00	2.04	1.64	1.20	0.00	292.2	59.0	50.9
36.83	4.67	2.09	30.0	0.70	21.0	1.04	0.64	1.00	1.00	1.00	1.00	1.00	2.04	1.64	1.21	0.00	293.1	59.8	51.5
36.73	4.67	2.09	30.0	0.70	21.0	1.04	0.64	1.00	1.00	1.00	1.00	1.00	2.04	1.64	1.22	0.00	294.0	60.5	52.1
36.64	4.67	2.09	30.0	0.70	21.0	1.04	0.64	1.00	1.00	1.00	1.00	1.00	2.04	1.64	1.23	0.00	294.9	61.2	52.7
36.55	4.67	2.09	30.0	0.70	21.0	1.04	0.64	1.00	1.00	1.00	1.00	1.00	2.04	1.64	1.24	0.00	295.8	62.0	53.3
36.45	4.67	2.09	30.0	0.70	21.0	1.04	0.64	1.00	1.00	1.00	1.00	1.00	2.04	1.64	1.26	0.00	296.7	62.7	53.9
36.36	4.67	2.09	30.0	0.70	21.0	1.04	0.64	1.00	1.00	1.00	1.00	1.00	2.04	1.64	1.27	0.00	297.6	63.4	54.5
36.26	4.67	2.09	30.0	0.70	21.0	1.04	0.64	1.00	1.00	1.00	1.00	1.00	2.04	1.64	1.28	0.00	298.5	64.2	55.1
36.17	4.67	2.09	30.0	0.70	21.0	1.04	0.64	1.00	1.00	1.00	1.00	1.00	2.04	1.64	1.29	0.00	299.4	64.9	55.7
36.07	4.67	2.09	30.0	0.70	21.0	1.04	0.64	1.00	1.00	1.00	1.00	1.00	2.04	1.64	1.30	0.00	300.3	65.6	56.3
35.98	4.67	2.09	30.0	0.70	21.0	1.04	0.64	1.00	1.00	1.00	1.00	1.00	2.04	1.64	1.31	0.00	301.2	66.4	56.9
35.89	4.67	2.09	30.0	0.70	21.0	1.04	0.64	1.00	1.00	1.00	1.00	1.00	2.04	1.64	1.32	0.00	302.1	67.1	57.5
35.79	4.67	2.09	30.0	0.70	21.0	1.04	0.64	1.00	1.00	1.00	1.00	1.00	2.04	1.64	1.33	0.00	303.0	67.8	58.1
35.70	4.67	2.09	30.0	0.70	21.0	1.04	0.64	1.00	1.00	1.00	1.00	1.00	2.04	1.64	1.35	0.00	303.9	68.6	58.7
35.60	4.67	2.09	30.0	0.70	21.0	1.04	0.64	1.00	1.00	1.00	1.00	1.00	2.04	1.64	1.36	0.00	304.8	69.3	59.3
35.51	4.67	2.09	30.0	0.70	21.0	1.04	0.64	1.00	1.00	1.00	1.00	1.00	2.04	1.64	1.37	0.00	305.7	70.0	59.9
35.41	4.67	2.09	30.0	0.70	21.0	1.04	0.64	1.00	1.00	1.00	1.00	1.00	2.04	1.64	1.38	0.00	306.6	70.7	60.5
35.32	4.67	2.09	30.0	0.70	21.0	1.04	0.64	1.00	1.00	1.00	1.00	1.00	2.04	1.64	1.39	0.00	307.5	71.5	61.1
35.23	4.67	2.09	30.0	0.70	21.0	1.04	0.64	1.00	1.00	1.00	1.00	1.00	2.04	1.64	1.40	0.00	308.4	72.2	61.7
35.13	4.67	2.09	30.0	0.70	21.0	1.04	0.64	1.00	1.00	1.00	1.00	1.00	2.04	1.64	1.41	0.00	309.2	72.9	62.3
35.04	4.67	2.09	30.0	0.70	21.0	1.04	0.64	1.00	1.00	1.00	1.00	1.00	2.04	1.64	1.42	0.00	310.1	73.7	62.9
34.94	4.67	2.09	30.0	0.70	21.0	1.04	0.64	1.00	1.00	1.00	1.00	1.00	2.04	1.64	1.44	0.00	311.0	74.4	63.5
34.85	4.67	2.09	30.0	0.70	21.0	1.04	0.64	1.00	1.00	1.00	1.00	1.00	2.04	1.64	1.45	0.00	311.9	75.1	64.1
34.76	4.67	2.09	30.0	0.70	21.0	1.04	0.64	1.00	1.00	1.00	1.00	1.00	2.04	1.64	1.46	0.00	312.8	75.9	64.7
34.66	4.67	2.09	30.0	0.70	21.0	1.04	0.64	1.00	1.00	1.00	1.00	1.00	2.04	1.64	1.47	0.00	313.7	76.6	65.3
34.57	4.67	2.09	30.0	0.70	21.0	1.04	0.64	1.00	1.00	1.00	1.00	1.00	2.04	1.64	1.48	0.00	314.6	77.3	65.9
34.47	4.67	2.09	30.0	0.70	21.0	1.04	0.64	1.00	1.00	1.00	1.00	1.00	2.04	1.64	1.49	0.00	315.5	78.1	66.5
34.38	4.67	2.09	30.0	0.70	21.0	1.04	0.64	1.00	1.00	1.00	1.00	1.00	2.04	1.64	1.50	0.00	316.4	78.8	67.1
34.28	4.67	2.09	30.0	0.70	21.0	1.04	0.64	1.00	1.00	1.00	1.00	1.00	2.04	1.64	1.51	0.00	317.3	79.5	67.7
34.19	4.67	2.09	30.0	0.70	21.0	1.04	0.64	1.00	1.00	1.00	1.00	1.00	2.04	1.64	1.53	0.00	318.2	80.3	68.3
34.10	4.67	2.09	30.0	0.70	21.0	1.04	0.64	1.00	1.00	1.00	1.00	1.00	2.04	1.64	1.54	0.00	319.1	81.0	68.9
34.00	4.67	2.09	30.0	0.70	21.0	1.04	0.64	1.00	1.00	1.00	1.00	1.00	2.04	1.64	1.55	0.00	320.0	81.7	69.5
33.91	4.67	2.09	30.0	0.70	21.0	1.04	0.64	1.00	1.00	1.00	1.00	1.00	2.04	1.64	1.56	0.00	320.9	82.5	70.1
33.81	4.67	2.09	30.0	0.70	21.0	1.04	0.64	1.00	1.00	1.00	1.00	1.00	2.04	1.64	1.57	0.00	321.8	83.2	70.7
33.72	4.67	2.09	30.0	0.70	21.0	1.04	0.64	1.00	1.00	1.00	1.00	1.00	2.04	1.64	1.58	0.00	322.7	83.9	71.3
33.63	4.67	2.09	30.0	0.70	21.0	1.04	0.64	1.00	1.00	1.00	1.00	1.00	2.04	1.64	1.59	0.00	323.6	84.7	71.9
33.53	4.67	2.09	30.0	0.70	21.0	1.04	0.64	1.00	1.00	1.00	1.00	1.00	2.04	1.64	1.60	0.00	324.5	85.4	72.5
33.44	4.67	2.09	30.0	0.70	21.0	1.04	0.64	1.00	1.00	1.00	1.00	1.00	2.04	1.64	1.61	0.00	325.4	86.1	73.1
33.34	4.67	2.09	30.0	0.70	21.0	1.04	0.64	1.00	1.00	1.00	1.00	1.00	2.04	1.64	1.63	0.00	326.3	86.9	73.7
33.25	4.67	2.09	30.0	0.70	21.0	1.04	0.64	1.00	1.00	1.00	1.00	1.00	2.04	1.64	1.64	0.00	327.2	87.6	74.3
33.15	4.67	2.09	30.0	0.70	21.0	1.04	0.64	1.00	1.00	1.00	1.00	1.00	2.04	1.64	1.65	0.00	328.1	88.3	74.9
33.06	4.67	2.09	30.0	0.70	21.0	1.04	0.64	1.00	1.00	1.00	1.00	1.00	2.04	1.64	1.66	0.00	329.0	89.1	75.5
32.97	4.67	2.09	30.0	0.70	21.0	1.04	0.64	1.00	1.00	1.00	1.00	1.00	2.04	1.64	1.67	0.00	329.9	89.8	76.1
32.87	4.67	2.09	30.0	0.70	21.0	1.04	0.64	1.00	1.00	1.00	1.00	1.00	2.04	1.64	1.68	0.00	330.8	90.5	76.7
32.78	4.67	2.09	30.0	0.70	21.0	1.04	0.64	1.00	1.00	1.00	1.00	1.00	2.04	1.64	1.69	0.00	331.7	91.3	77.3
32.68	4.67	2.09	30.0	0.70	21.0	1.04	0.64	1.00	1.00	1.00	1.00	1.00	2.04	1.64	1.70	0.00	332.6	92.0	77.9
32.59	4.67	2.09	30.0	0.70	21.0	1.04	0.64	1.00	1.00	1.00	1.00	1.00	2.04	1.64	1.72	0.00	333.5	92.7	78.5
32.49	4.67	2.09	30.0	0.70	21.0	1.04	0.64	1.00	1.00	1.00	1.00	1.00	2.04	1.64	1.73	0.00	334.4	93.5	79.1
32.40	4.67	2.09	30.0	0.70	21.0	1.04	0.64	1.00	1.00	1.00	1.00	1.00	2.04	1.64	1.74	0.00	335.3	94.2	79.7
32.31	4.67	2.09	30.0	0.70	21.0	1.04	0.64	1.00	1.00	1.00	1.00	1.00	2.04	1.64	1.75	0.00	336.2	94.9	80.3
32.21	4.67	2.09	30.0	0.70	21.0	1.04	0.64	1.00	1.00	1.00	1.00	1.00	2.04	1.64	1.76	0.00	337.1	95.6	80.9
32.12	4.67	2.09	30.0	0.70	21.0	1.04	0.64	1.00	1.00	1.00	1.00	1.00	2.04	1.64	1.77	0.00	338.0	96.4	81.5
32.02	4.67	2.09	30.0	0.70	21.0	1.04	0.64	1.00	1.00	1.00	1.00	1.00	2.04	1.64	1.78	0.00	338.9	97.1	82.1
31.93	4.67	2.09	30.0	0.70	21.0	1.04	0.64	1.00	1.00	1.00	1.00	1.00	2.04	1.64	1.79	0.00	339.8	97.8	82.7
31.84	4.67	2.09	30.0	0.70	21.0	1.04	0.64	1.00	1.00	1.00	1.00	1.00	2.04	1.64	1.81	0.00	340.7	98.6	83.3
31.74	4.67	2.09	30.0	0.70	21.0	1.04	0.64	1.00	1.00	1.00	1.00	1.00	2.04	1.64	1.82	0.00	341.5	99.3	83.9
31.65	4.67	2.09	30.0	0.70	21.0	1.04	0.64	1.00	1.00	1.00	1.00	1.00	2.04	1.64	1.83	0.00	342.4	100.0	84.5
31.55	4.67	2.09	30.0	0.70	21.0	1.04	0.64	1.00	1.00	1.00	1.00	1.00	2.04	1.64	1.84	0.00	343.3	100.8	85.1
31.46	4.67	2.09	30.0	0.70	21.0	1.04	0.64	1.00	1.00	1.00	1.00	1.00	2.04	1.64	1.85	0.00	344.2	101.5	85.7
31.36	4.67	2.09	30.0	0.70	21.0	1.04	0.64	1.00	1.00	1.00	1.00	1.00	2.04	1.64	1.86	0.00	345.1	102.2	86.3
31.27	4.67	2.09	30.0	0.70	21.0	1.04	0.64	1.00	1.00	1.00	1.00	1.00	2.04	1.64	1.87	0.00	346.0	103.0	86.9
31.18	4.67	2.09	30.0	0.70	21.0	1.04	0.64	1.00	1.00	1.00	1.00	1.00	2.04	1.64	1.88	0.00	346.9	103.7	87.5
31.08	4.67	2.09	30.0	0.70	21.0	1.04	0.64	1.00	1.00	1.00	1.00	1.00	2.04	1.64	1.90	0.00	347.8	104.4	88.1
30.99	4.67	2.09	30.0	0.70	21.0	1.04	0.64	1.00	1.00	1.00	1.00	1.00	2.04	1.64	1.91	0.00	348.7	105.2	88.7
30.89	4.67	2.09	30.0	0.70	21.0	1.04	0.64	1.00	1.00	1.00	1.00	1.00	2.04	1.64	1.92	0.00	349.6	105.9	89.3
30.80	4.67	2.09	30.0	0.70	21.0	1.04	0.64	1.00	1.00	1.00	1.00	1.00	2.04	1.64	1.93	0.00	350.5	106.6	89.9
30.71	4.67	2.09	30.0	0.70	21.0	1.04	0.64	1.00	1.00	1.00	1.00	1.00	2.04	1.64	1.94	0.00	351.4	107.4	90.5
30.61	4.67	2.09	30.0	0.70	21.0	1.04	0.64	1.00	1.00	1.00	1.00	1.00	2.04	1.64	1.95	0.00	352.3	108.1	91.1
30.52	4.67	2.09	30.0	0.70	21.0	1.04	0.64	1.00	1.00	1.00	1.00	1.00	2.04	1.64	1.96	0.00	353.2	108.8	91.7
30.42	4.67	2.09	30.0	0.70	21.0	1.04	0.64	1.00	1.00	1.00	1.00	1.00	2.04	1.64	1.97	0.00	354.1	109.6	92.3
30.33	4.67	2.09	30.0	0.70	21.0	1.04	0.64	1.00	1.00	1.00	1.00	1.00	2.04	1.64	1.99	0.00	355.0	110.3	92.9
30.23	4.67	2.09	30.0	0.70	21.0	1.04	0.64	1.00	1.00	1.00	1.00	1.00	2.04	1.64	2.00	0.00	355.9	111.0	93.5
30.14	4.67	2.09	30.0	0.70	21.0	1.04	0.64	1.00	1.00	1.00	1.00	1.00	2.04	1.64	2.01	0.00	356.8	111.8	94.1
30.05	4.67	2.09	30.0	0.70	21.0	1.04	0.64	1.00	1.00	1.00	1.00	1.00	2.04	1.64	2.02	0.00	357.7	112.5	94.7
29.95	4.67	2.09	30.0	0.70	21.0	1.04	0.64	1.00	1.00	1.00	1.00	1.00	2.04	1.64	2.03	0.00	358.6	113.2	95.3
29.86	4.67	2.09	30.0	0.70	21.0	1.04	0.64	1.00	1.00	1.00	1.00	1.00	2.04	1.64	2.04	0.00	359.5	114.0	95.9
29.76	4.67	2.09	30.0	0.70	21.0	1.04	0.64	1.00	1.00	1.00	1.00	1.00	2.04	1.64	2.05	0.00	360.4	114.7	96.5
29.67	4.67	2.09	30.0	0.70	21.0	1.04	0.64	1.00	1.00	1.00	1.00	1.00	2.04	1.64	2.06	0.00	361.3	115.4	97.1
29.58	4.67	2.09	30.0	0.70	21.0	1.04	0.64	1.00	1.00	1.00	1.00	1.00	2.04	1.64	2.07	0.00	362.2	116.2	97.7
29.48	4.67	2.09	30.0	0.70	21.0	1.04	0.64	1.00	1.00	1.00	1.00	1.00	2.04	1.64	2.09	0.00	363.1	116.9	98.3
29.39	4.67	2.09	30.0	0.70	21.0	1.04	0.64	1.00	1.00	1.00	1.00	1.00	2.04	1.64	2.10	0.00	364.0	117.6	98.9
29.29	4.67	2.09	30.0	0.70	21.0	1.04	0.64	1.00	1.00	1.00	1.00	1.00	2.04	1.64	2.11	0.00	364.9	118.4	99.5
29.20	4.67	2.09	30.0	0.70	21.0	1.04	0.64	1.00	1.00	1.00	1.00	1.00	2.04	1.64	2.12	0.00	365.8	119.1	100.1
29.10	4.67	2.09	30.0	0.70	21.0	1.04	0.64	1.00	1.00	1.00	1.00	1.00	2.04	1.64	2.13	0.00	366.7	119.8	100.7
29.01	4.67	2.09	30.0	0.70	21.0	1.04	0.64	1.00	1.00	1.00	1.00	1.00	2.04	1.64	2.14	0.00	367.6	120.6	101.3
28.92	4.67	2.09	30.0	0.70	21.0	1.04	0.64	1.00	1.00	1.00	1.00	1.00	2.04	1.64	2.15	0.00	368.5	121.3	102.0
28.82	4.67	2.09	30.0	0.70	21.0	1.04	0.64	1.00	1.00	1.00	1.00	1.00	2.04	1.64	2.16	0.00	369.4	122.0	102.6
28.73	4.67	2.09	30.0	0.70	21.0	1.04	0.64	1.00	1.00	1.00	1.00	1.00	2.04	1.64	2.18	0.00	370.3	122.7	103.2
28.63	4.67	2.09	30.0	0.70	21.0	1.04	0.64	1.00	1.00	1.00	1.00	1.00	2.04	1.64	2.19	0.00	371.2	123.5	103.8
28.54	4.67	2.09	30.0	0.70	21.0	1.04	0.64	1.00	1.00	1.00	1.00	1.00	2.04	1.64	2.20	0.00	372.1	124.2	104.4
28.44	4.67	2.09	30.0	0.70	21.0	1.04	0.64	1.00	1.00	1.00	1.00	1.00	2.04	1.64	2.21	0.00	373.0	124.9	105.0
28.35	4.67	2.09	30.0	0.70	21.0	1.04	0.64	1.00	1.00	1.00	1.00	1.00	2.04	1.64	2.22	0.00	373.9	125.7	105.6
28.26	4.67	2.09	30.0	0.70	21.0	1.04	0.64	1.00	1.00	1.00	1.00	1.00	2.04	1.64	2.23	0.00	374.7	126.4	106.2
28.16	4.67	2.09	30.0	0.70	21.0	1.04	0.64	1.00	1.00	1.00	1.00	1.00	2.04	1.64	2.24	0.00	375.6	127.1	106.8
28.07	4.67	2.09	30.0	0.70	21.0	1.04	0.64	1.00	1.00	1.00	1.00	1.00	2.04	1.64	2.25	0.00	376.5	127.9	107.4
27.97	4.67	2.09	30.0	0.70	21.0	1.04	0.64	1.00	1.00	1.00	1.00	1.00	2.04	1.64	2.27	0.00	377.4	128.6	108.0
27.88	4.67	2.09	30.0	0.70	21.0	1.04	0.64	1.00	1.00	1.00	1.00	1.00	2.04	1.64	2.28	0.00	378.3	129.3	108.6
27.79	4.67	2.09	30.0	0.70	21.0	1.04	0.64	1.00	1.00	1.00	1.00	1.00	2.04	1.64	2.29	0.00	379.2	130.1	109.2
27.69	4.67	2.09	30.0	0.70	21.0	1.04	0.64	1.00	1.00	1.00	1.00	1.00	2.04	1.64	2.30	0.00	380.1	130.8	109.8
27.60	4.67	2.09	30.0	0.70	21.0	1.04	0.64	1.00	1.00	1.00	1.00	1.00	2.04	1.64	2.31	0.00	381.0	131.5	110.4
27.50	4.67	2.09	30.0	0.70	21.0	1.04	0.64	1.00	1.00	1.00	1.00	1.00	2.04	1.64	2.32	0.00	381.9	132.3	111.0
27.41	4.67	2.09	30.0	0.70	21.0	1.04	0.64	1.00	1.00	1.00	1.00	1.00	2.04	1.64	2.33	0.00	382.8	133.0	111.6
27.31	4.67	2.09	30.0	0.70	21.0	1.04	0.64	1.00	1.00	1.00	1.00	1.00	2.04	1.64	2.34	0.00	383.7	133.7	112.2
27.22	4.67	2.09	30.0	0.70	21.0	1.04	0.64	1.00	1.00	1.00	1.00	1.00	2.04	1.64	2.36	0.00	384.6	134.5	112.8
27.13	4.67	2.09	30.0	0.70	21.0	1.04	0.64	1.00	1.00	1.00	1.00	1.00	2.04	1.64	2.37	0.00	385.5	135.2	113.4
27.03	4.67	2.09	30.0	0.70	21.0	1.04	0.64	1.00	1.00	1.00	1.00	1.00	2.04	1.64	2.38	0.00	386.4	135.9	114.0
26.94	4.67	2.09	30.0	0.70	21.0	1.04	0.64	1.00	1.00	1.00	1.00	1.00	2.04	1.64	2.39	0.00	387.3	136.7	114.6
26.84	4.67	2.09	30.0	0.70	21.0	1.04	0.64	1.00	1.00	1.00	1.00	1.00	2.04	1.64	2.40	0.00	388.2	137.4	115.2
26.75	4.67	2.09	30.0	0.70	21.0	1.04	0.64	1.00	1.00	1.00	1.00	1.00	2.04	1.64	2.41	0.00	389.1	138.1	115.8
26.66	4.67	2.09	30.0	0.70	21.0	1.04	0.64	1.00	1.00	1.00	1.00	1.00	2.04	1.64	2.42	0.00	390.0	138.9	116.4
26.56	4.67	2.09	30.0	0.70	21.0	1.04	0.64	1.00	1.00	1.00	1.00	1.00	2.04	1.64	2.43	0.00	390.9	139.6	117.0
26.47	4.67	2.09	30.0	0.70	21.0	1.04	0.64	1.00	1.00	1.00	1.00	1.00	2.04	1.64	2.44	0.00	391.8	140.3	117.6
26.37	4.67	2.09	30.0	0.70	21.0	1.04	0.64	1.00	1.00	1.00	1.00	1.00	2.04	1.64	2.46	0.00	392.7	141.1	118.2
26.28	4.67	2.09	30.0	0.70	21.0	1.04	0.64	1.00	1.00	1.00	1.00	1.00	2.04	1.64	2.47	0.00	393.6	141.8	118.8

26.18	4.67	2.09	30.0	0.70	21.0	1.04	0.64	1.00	1.00	1.00	1.00	1.00	2.04	1.64	2.48	0.00	394.5	142.5	119.4
26.09	4.67	2.09	30.0	0.70	21.0	1.04	0.64	1.00	1.00	1.00	1.00	1.00	2.04	1.64	2.49	0.00	395.4	143.3	120.0
26.00	4.67	2.09	30.0	0.70	21.0	1.04	0.64	1.00	1.00	1.00	1.00	1.00	2.04	1.64	2.50	0.00	396.3	144.0	120.6
25.90	4.67	2.09	30.0	0.70	21.0	1.04	0.64	1.00	1.00	1.00	1.00	1.00	2.04	1.64	2.51	0.00	397.2	144.7	121.2
25.81	4.67	2.09	30.0	0.70	21.0	1.04	0.64	1.00	1.00	1.00	1.00	1.00	2.04	1.64	2.52	0.00	398.1	145.5	121.8
25.71	4.67	2.09	30.0	0.70	21.0	1.04	0.64	1.00	1.00	1.00	1.00	1.00	2.04	1.64	2.53	0.00	399.0	146.2	122.4
25.62	4.67	2.09	30.0	0.70	21.0	1.04	0.64	1.00	1.00	1.00	1.00	1.00	2.04	1.64	2.55	0.00	399.9	146.9	123.0
25.53	4.67	2.09	30.0	0.70	21.0	1.04	0.64	1.00	1.00	1.00	1.00	1.00	2.04	1.64	2.56	0.00	400.8	147.7	123.6
25.43	4.67	2.09	30.0	0.70	21.0	1.04	0.64	1.00	1.00	1.00	1.00	1.00	2.04	1.64	2.57	0.00	401.7	148.4	124.2
25.34	4.67	2.09	30.0	0.70	21.0	1.04	0.64	1.00	1.00	1.00	1.00	1.00	2.04	1.64	2.58	0.00	402.6	149.1	124.8
25.24	4.67	2.09	30.0	0.70	21.0	1.04	0.64	1.00	1.00	1.00	1.00	1.00	2.04	1.64	2.59	0.00	403.5	149.8	125.4
25.15	4.67	2.09	30.0	0.70	21.0	1.04	0.64	1.00	1.00	1.00	1.00	1.00	2.04	1.64	2.60	0.00	404.4	150.6	126.0
25.05	4.67	2.09	30.0	0.70	21.0	1.04	0.64	1.00	1.00	1.00	1.00	1.00	2.04	1.64	2.61	0.00	405.3	151.3	126.6
24.96	4.67	2.09	30.0	0.70	21.0	1.04	0.64	1.00	1.00	1.00	1.00	1.00	2.04	1.64	2.62	0.00	406.2	152.0	127.2
24.87	4.67	2.09	30.0	0.70	21.0	1.04	0.64	1.00	1.00	1.00	1.00	1.00	2.04	1.64	2.64	0.00	407.0	152.8	127.8
24.77	4.67	2.09	30.0	0.70	21.0	1.04	0.64	1.00	1.00	1.00	1.00	1.00	2.04	1.64	2.65	0.00	407.9	153.5	128.4
24.68	4.67	2.09	30.0	0.70	21.0	1.04	0.64	1.00	1.00	1.00	1.00	1.00	2.04	1.64	2.66	0.00	408.8	154.2	129.0
24.58	4.67	2.09	30.0	0.70	21.0	1.04	0.64	1.00	1.00	1.00	1.00	1.00	2.04	1.64	2.67	0.00	409.7	155.0	129.6
24.49	4.67	2.09	0.0	0.70	0.0	0.00	0.00	1.50	1.00	1.00	-1.50	1.50	-1.50	1.50	2.68	-0.66	409.1	155.6	129.6
24.39	4.67	2.09	0.0	0.70	0.0	0.00	0.00	1.50	1.00	1.00	-1.50	1.50	-1.50	1.50	2.69	-1.32	408.4	156.3	129.6
24.30	4.67	2.09	0.0	0.70	0.0	0.00	0.00	1.50	1.00	1.00	-1.50	1.50	-1.50	1.50	2.70	-1.98	407.8	157.0	129.6
24.21	4.67	2.09	0.0	0.70	0.0	0.00	0.00	1.50	1.00	1.00	-1.50	1.50	-1.50	1.50	2.71	-2.64	407.1	157.7	129.6
24.11	4.67	2.09	0.0	0.70	0.0	0.00	0.00	1.50	1.00	1.00	-1.50	1.50	-1.50	1.50	2.73	-3.30	406.4	158.3	129.6
24.02	4.67	2.09	0.0	0.70	0.0	0.00	0.00	1.50	1.00	1.00	-1.50	1.50	-1.50	1.50	2.74	-3.96	405.8	159.0	129.6
23.92	4.67	2.09	0.0	0.70	0.0	0.00	0.00	1.50	1.00	1.00	-1.50	1.50	-1.50	1.50	2.75	-4.62	405.1	159.7	129.6
23.83	4.67	2.09	0.0	0.70	0.0	0.00	0.00	1.50	1.00	1.00	-1.50	1.50	-1.50	1.50	2.76	-5.27	404.5	160.3	129.6
23.74	4.67	2.09	0.0	0.70	0.0	0.00	0.00	1.50	1.00	1.00	-1.50	1.50	-1.50	1.50	2.77	-5.93	403.8	161.0	129.6
23.64	4.67	2.09	0.0	0.70	0.0	0.00	0.00	1.50	1.00	1.00	-1.50	1.50	-1.50	1.50	2.78	-6.59	403.1	161.7	129.6
23.55	4.67	2.09	0.0	0.70	0.0	0.00	0.00	1.50	1.00	1.00	-1.50	1.50	-1.50	1.50	2.79	-7.25	402.5	162.4	129.6
23.45	4.67	2.09	0.0	0.70	0.0	0.00	0.00	1.50	1.00	1.00	-1.50	1.50	-1.50	1.50	2.80	-7.91	401.8	163.0	129.6
23.36	4.67	2.09	0.0	0.70	0.0	0.00	0.00	1.50	1.00	1.00	-1.50	1.50	-1.50	1.50	2.81	-8.57	401.2	163.7	129.6
23.26	4.67	2.09	0.0	0.70	0.0	0.00	0.00	1.50	1.00	1.00	-1.50	1.50	-1.50	1.50	2.83	-9.23	400.5	164.4	129.6
23.17	4.67	2.08	0.0	0.70	0.0	0.00	0.00	1.50	1.00	1.00	-1.50	1.50	-1.50	1.50	2.84	-9.89	399.9	165.0	129.6
23.08	4.67	2.07	0.0	0.70	0.0	0.00	0.00	1.50	1.00	1.00	-1.50	1.50	-1.50	1.50	2.85	-10.55	399.2	165.7	129.6
22.98	4.67	2.07	0.0	0.70	0.0	0.00	0.00	1.50	1.00	1.00	-1.50	1.50	-1.50	1.50	2.86	-11.21	398.5	166.4	129.6
22.89	4.67	2.06	0.0	0.70	0.0	0.00	0.00	1.50	1.00	1.00	-1.50	1.50	-1.50	1.50	2.87	-11.87	397.9	167.0	129.6
22.79	4.67	2.05	0.0	0.70	0.0	0.00	0.00	1.50	1.00	1.00	-1.50	1.50	-1.50	1.50	2.88	-12.53	397.2	167.7	129.6
22.70	4.67	2.05	0.0	0.70	0.0	0.00	0.00	1.50	1.00	1.00	-1.50	1.50	-1.50	1.50	2.89	-13.19	396.6	168.4	129.6
22.61	4.67	2.04	0.0	0.70	0.0	0.00	0.00	1.50	1.00	1.00	-1.50	1.50	-1.50	1.50	2.90	-13.85	395.9	169.1	129.6
22.51	4.67	2.03	0.0	0.70	0.0	0.00	0.00	1.50	1.00	1.00	-1.50	1.50	-1.50	1.50	2.92	-14.51	395.2	169.7	129.6
22.42	4.67	2.03	0.0	0.70	0.0	0.00	0.00	1.50	1.00	1.00	-1.50	1.50	-1.50	1.50	2.93	-15.16	394.6	170.4	129.6
22.32	4.67	2.02	0.0	0.70	0.0	0.00	0.00	1.50	1.00	1.00	-1.50	1.50	-1.50	1.50	2.94	-15.82	393.9	171.1	129.6
22.23	4.67	2.01	0.0	0.70	0.0	0.00	0.00	1.50	1.00	1.00	-1.50	1.50	-1.50	1.50	2.95	-16.48	393.3	171.7	129.6
22.13	4.67	2.01	0.0	0.70	0.0	0.00	0.00	1.50	1.00	1.00	-1.50	1.50	-1.50	1.50	2.96	-17.14	392.6	172.4	129.6
22.04	4.67	2.00	0.0	0.70	0.0	0.00	0.00	1.50	1.00	1.00	-1.50	1.50	-1.50	1.50	2.97	-17.80	391.9	173.1	129.6
21.95	4.67	1.99	34.0	0.70	23.8	1.14	0.70	0.00	1.00	1.00	0.00	0.00	1.14	0.70	2.98	-17.80	392.4	173.4	129.9
21.85	4.67	1.99	34.0	0.70	23.8	1.14	0.70	0.00	1.00	1.00	0.00	0.00	1.14	0.70	2.99	-17.80	392.9	173.7	130.2
21.76	4.67	1.98	34.0	0.70	23.8	1.14	0.70	0.00	1.00	1.00	0.00	0.00	1.14	0.70	3.01	-17.80	393.4	174.0	130.5
21.66	4.67	1.98	34.0	0.70	23.8	1.13	0.70	0.00	1.00	1.00	0.00	0.00	1.13	0.70	3.02	-17.80	393.9	174.4	130.8
21.57	4.67	1.97	34.0	0.70	23.8	1.13	0.70	0.00	1.00	1.00	0.00	0.00	1.13	0.70	3.03	-17.80	394.4	174.7	131.1
21.47	4.67	1.97	34.0	0.70	23.8	1.13	0.69	0.00	1.00	1.00	0.00	0.00	1.13	0.69	3.04	-17.80	394.9	175.0	131.4
21.38	4.67	1.96	34.0	0.70	23.8	1.12	0.69	0.00	1.00	1.00	0.00	0.00	1.12	0.69	3.05	-17.80	395.4	175.3	131.7
21.29	4.67	1.96	34.0	0.70	23.8	1.12	0.69	0.00	1.00	1.00	0.00	0.00	1.12	0.69	3.06	-17.80	395.9	175.6	132.0
21.19	4.67	1.95	34.0	0.70	23.8	1.12	0.69	0.00	1.00	1.00	0.00	0.00	1.12	0.69	3.07	-17.80	396.4	175.9	132.3
21.10	4.67	1.94	34.0	0.70	23.8	1.12	0.69	0.00	1.00	1.00	0.00	0.00	1.12	0.69	3.08	-17.80	396.9	176.2	132.6
21.00	4.67	1.94	34.0	0.70	23.8	1.11	0.68	0.00	1.00	1.00	0.00	0.00	1.11	0.68	3.10	-17.80	397.4	176.6	132.9
20.91	4.67	1.93	34.0	0.70	23.8	1.11	0.68	0.00	1.00	1.00	0.00	0.00	1.11	0.68	3.11	-17.80	397.9	176.9	133.2
20.82	4.67	1.93	34.0	0.70	23.8	1.11	0.68	0.00	1.00	1.00	0.00	0.00	1.11	0.68	3.12	-17.80	398.4	177.2	133.5
20.72	4.67	1.92	34.0	0.70	23.8	1.10	0.68	0.00	1.00	1.00	0.00	0.00	1.10	0.68	3.13	-17.80	398.8	177.5	133.7
20.63	4.67	1.92	34.0	0.70	23.8	1.10	0.68	0.00	1.00	1.00	0.00	0.00	1.10	0.68	3.14	-17.80	399.3	177.8	134.0
20.53	4.67	1.91	34.0	0.70	23.8	1.10	0.67	0.00	1.00	1.00	0.00	0.00	1.10	0.67	3.15	-17.80	399.8	178.1	134.3
20.44	4.67	1.91	34.0	0.70	23.8	1.09	0.67	0.00	1.00	1.00	0.00	0.00	1.09	0.67	3.16	-17.80	400.3	178.4	134.6
20.34	4.67	1.90	34.0	0.70	23.8	1.09	0.67	0.00	1.00	1.00	0.00	0.00	1.09	0.67	3.17	-17.80	400.8	178.7	134.9
20.25	4.67	1.90	34.0	0.70	23.8	1.09	0.67	0.00	1.00	1.00	0.00	0.00	1.09	0.67	3.18	-17.80	401.3	179.0	135.2
20.16	4.67	1.89	34.0	0.70	23.8	1.08	0.67	0.00	1.00	1.00	0.00	0.00	1.08	0.67	3.20	-17.80	401.7	179.3	135.5
20.06	4.67	1.88	34.0	0.70	23.8	1.08	0.66	0.00	1.00	1.00	0.00	0.00	1.08	0.66	3.21	-17.80	402.2	179.6	135.8
19.97	4.67	1.88	34.0	0.70	23.8	1.08	0.66	0.00	1.00	1.00	0.00	0.00	1.08	0.66	3.22	-17.80	402.7	179.9	136.0
19.87	4.67	1.87	34.0	0.70	23.8	1.07	0.66	0.00	1.00	1.00	0.00	0.00	1.07	0.66	3.23	-17.80	403.1	180.2	136.3
19.78	4.67	1.87	34.0	0.70	23.8	1.07	0.66	0.00	1.00	1.00	0.00	0.00	1.07	0.66	3.24	-17.80	403.6	180.5	136.6
19.69	4.67	1.86	34.0	0.70	23.8	1.07	0.66	0.00	1.00	1.00	0.00	0.00	1.07	0.66	3.25	-17.80	404.1	180.8	136.9
19.59	4.67	1.86	34.0	0.70	23.8	1.06	0.66	0.00	1.00	1.00	0.00	0.00	1.06	0.66	3.26	-17.80	404.6	181.1	137.2
19.50	4.67	1.85	34.0	0.70	23.8	1.06	0.65	0.00	1.00	1.00	0.00	0.00	1.06	0.65	3.27	-17.80	405.0	181.4	137.4
19.40	4.67	1.85	34.0	0.70	23.8	1.06	0.65	0.00	1.00	1.00	0.00	0.00	1.06	0.65	3.29	-17.80	405.5	181.7	137.7
19.31	4.67	1.84	34.0	0.70	23.8	1.05	0.65	0.00	1.00	1.00	0.00	0.00	1.05	0.65	3.30	-17.80	406.0	182.0	138.0
19.21	4.67	1.83	34.0	0.70	23.8	1.05	0.65	0.00	1.00	1.00	0.00	0.00	1.05	0.65	3.31	-17.80	406.4	182.3	138.3
19.12	4.67	1.83	34.0	0.70	23.8	1.05	0.65	0.00	1.00	1.00	0.00	0.00	1.05	0.65	3.32	-17.80	406.9	182.6	138.6
19.03	4.67	1.82	34.0	0.70	23.8	1.05	0.64	0.00	1.00	1.00	0.00	0.00	1.05	0.64	3.33	-17.80	407.3	182.9	138.8
18.93	4.67	1.82	34.0	0.70	23.8	1.04	0.64	0.00	1.00	1.00	0.00	0.00	1.04	0.64	3.34	-17.80	407.8	183.2	139.1
18.84	4.67	1.81	34.0	0.70	23.8	1.04	0.64	0.00	1.00	1.00	0.00	0.00	1.04	0.64	3.35	-17.80	408.2	183.5	139.4
18.74	4.67	1.81	34.0	0.70	23.8	1.04	0.64	0.00	1.00	1.00	0.00	0.00	1.04	0.64	3.36	-17.80	408.7	183.8	139.7
18.65	4.67	1.80	34.0	0.70	23.8	1.03	0.64	0.00	1.00	1.00	0.00	0.00	1.03	0.64	3.38	-17.80	409.2	184.1	139.9
18.56	4.67	1.80	34.0	0.70	23.8	1.03	0.63	0.00	1.00	1.00	0.00	0.00	1.03	0.63	3.39	-17.80	409.6	184.4	140.2
18.46	4.67	1.79	34.0	0.70	23.8	1.03	0.63	0.00	1.00	1.00	0.00	0.00	1.03	0.63	3.40	-17.80	410.1	184.7	140.5
18.37	4.67	1.78	34.0	0.70	23.8	1.02	0.63	0.00	1.00	1.00	0.00	0.00	1.02	0.63	3.41	-17.80	410.5	184.9	140.7
18.27	4.67	1.78	34.0	0.70	23.8	1.02	0.63	0.00	1.00	1.00	0.00	0.00	1.02	0.63	3.42	-17.80	411.0	185.2	141.0
18.18	4.67	1.77	34.0	0.70	23.8	1.02	0.63	0.00	1.00	1.00	0.00	0.00	1.02	0.63	3.43	-17.80	411.4	185.5	141.3
18.08	4.67	1.77	34.0	0.70	23.8	1.01	0.62	0.00	1.00	1.00	0.00	0.00	1.01	0.62	3.44	-17.80	411.9	185.8	141.5
17.99	4.67	1.76	34.0	0.70	23.8	1.01	0.62	0.00	1.00	1.00	0.00	0.00	1.01	0.62	3.45	-17.80	412.3	186.1	141.8
17.90	4.67	1.76	34.0	0.70	23.8	1.01	0.62	0.00	1.00	1.00	0.00	0.00	1.01	0.62	3.47	-17.80	412.7	186.4	142.1
17.80	4.67	1.75	34.0	0.70	23.8	1.00	0.62	0.00	1.00	1.00	0.00	0.00	1.00	0.62	3.48	-17.80	413.2	186.7	142.3
17.71	4.67	1.75	34.0	0.70	23.8	1.00	0.62	0.00	1.00	1.00	0.00	0.00	1.00	0.62	3.49	-17.80	413.6	186.9	142.6
17.61	4.67	1.74	34.0	0.70	23.8	1.00	0.61	0.00	1.00	1.00	0.00	0.00	1.00	0.61	3.50	-17.80	414.1	187.2	142.9
17.52	4.67	1.73	34.0	0.70	23.8	0.99	0.61	0.00	1.00	1.00	0.00	0.00	0.99	0.61	3.51	-17.80	414.5	187.5	143.1
17.42	4.67	1.73	34.0	0.70	23.8	0.99	0.61	0.00	1.00	1.00	0.00	0.00	0.99	0.61	3.52	-17.80	414.9	187.8	143.4
17.33	4.67	1.72	34.0	0.70	23.8	0.99	0.61	0.00	1.00	1.00	0.00	0.00	0.99	0.61	3.53	-17.80	415.4	188.1	143.7
17.24	4.67	1.72	34.0	0.70	23.8	0.99	0.61	0.00	1.00	1.00	0.00	0.00	0.99	0.61	3.54	-17.80	415.8	188.3	143.9
17.14	4.67	1.71	34.0	0.70	23.8	0.98	0.60	0.00	1.00	1.00	0.00	0.00	0.98	0.60	3.56	-17.80	416.2	188.6	144.2
17.05	4.67	1.71	34.0	0.70	23.8	0.98	0.60	0.00	1.00	1.00	0.00	0.00	0.98	0.60	3.57	-17.80	416.7	188.9	144.4
16.95	4.67	1.70	34.0	0.70	23.8	0.98	0.60	0.00	1.00	1.00	0.00	0.00	0.98	0.60	3.58	-17.80	417.1	189.2	144.7
16.86	4.67	1.70	34.0	0.70	23.8	0.97	0.60	0.00	1.00	1.00	0.00	0.00	0.97	0.60	3.59	-17.80	417.5	189.4	144.9
16.77	4.67	1.69	34.0	0.70	23.8	0.97	0.60	0.00	1.00	1.00	0.00	0.00	0.97	0.60	3.60	-17.80	417.9	189.7	145.2
16.67	4.67	1.69	34.0	0.70	23.8	0.97	0.59	0.00	1.00	1.00	0.00	0.00	0.97	0.59	3.61	-17.80	418.4	190.0	145.5
16.58	4.67	1.68	34.0	0.70	23.8	0.96	0.59	0.00	1.00	1.00	0.00	0.00	0.96	0.59	3.62	-17.80	418.8	190.3	145.7
16.48	4.67	1.67	34.0	0.70	23.8	0.96	0.59	0.00	1.00	1.00	0.00	0.00	0.96	0.59	3.63	-17.80	419.2	190.5	146.0
16.39	4.67	1.67	34.0	0.70	23.8	0.96	0.59	0.00	1.00	1.00	0.00	0.00	0.96	0.59	3.64	-17.80	419.6	190.8	146.2
16.29	4.67	1.66	34.0	0.70	23.8	0.95	0.59	0.00	1.00	1.00	0.00	0.00	0.95	0.59	3.66	-17.80	420.1	191.1	146.5
16.20	4.67	1.66	34.0	0.70	23.8	0.95	0.58	0.00	1.00	1.00	0.00	0.00	0.95	0.58	3.67	-17.80	420.5	191.3	146.7
16.11	4.67	1.65	34.0	0.70	23.8	0.95	0.58	0.00	1.00	1.00	0.00	0.00	0.95	0.58	3.68	-17.80	420.9	191.6	147.0
16.01	4.67	1.65	34.0	0.70	23.8	0.94	0.58	0.00	1.00	1.00	0.00	0.00	0.94	0.58	3.69	-17.80	421.3	191.9	147.2
15.92	4.67	1.64	34.0	0.70	23.8	0.94	0.58	0.00	1.00	1.00	0.00	0.00	0.94	0.58	3.70	-17.80	421.7	192.1	147.5
15.82	4.67	1.64	34.0	0.70	23.8	0.94	0.58	0.00	1.00	1.00	0.00	0.00	0.94	0.58	3.71	-17.80	422.1	192.4	147.7
15.73	4.67	1.63	34.0	0.70	23.8	0.93	0.58	0.00	1.00	1.00	0.00	0.00	0.93	0.58	3.72	-17.80	422.5	192.7	148.0
15.64	4.67	1.62	34.0	0.70	23.8	0.93	0.57	0.00	1.00	1.00	0.00	0.00	0.93	0.57	3.73	-17.80	422.9	192.9	148.2
15.54	4.67	1.62	34.0	0.70	23.8	0.93	0.57	0.00	1.00	1.00	0.00	0.00	0.93	0.57	3.75	-17.80	423.4	193.2	148.4
15.45	4.67	1.61	34.0	0.70	23.8	0.92	0.57	0.00	1.00	1.00	0.00	0.00	0.92	0.57	3.76	-17.80	423.8	193.4	148.7
15.35	4.67	1.61	34.0	0.70	23.8	0.92	0.57	0.00	1.00	1.00	0.00	0.00	0.92	0.57	3.77	-17.80	424.2	193.7	148.9
15.26	4.67	1.60	34.0	0.70	23.8	0.92	0.57	0.00	1.00	1.00	0.00	0.00	0.92	0.57	3.78	-17.80	424.6	194.0	149.2

15.16	4.67	1.60	34.0	0.70	23.8	0.92	0.56	0.00	1.00	1.00	0.00	0.00	0.92	0.56	3.79	-17.80	425.0	194.2	149.4
15.07	4.67	1.59	34.0	0.70	23.8	0.91	0.56	0.00	1.00	1.00	0.00	0.00	0.91	0.56	3.80	-17.80	425.4	194.5	149.7
14.98	4.67	1.59	34.0	0.70	23.8	0.91	0.56	0.00	1.00	1.00	0.00	0.00	0.91	0.56	3.81	-17.80	425.8	194.7	149.9
14.88	4.67	1.58	34.0	0.70	23.8	0.91	0.56	0.00	1.00	1.00	0.00	0.00	0.91	0.56	3.82	-17.80	426.2	195.0	150.1
14.79	4.67	1.57	34.0	0.70	23.8	0.90	0.56	0.00	1.00	1.00	0.00	0.00	0.90	0.56	3.84	-17.80	426.6	195.3	150.4
14.69	4.67	1.57	34.0	0.70	23.8	0.90	0.55	0.00	1.00	1.00	0.00	0.00	0.90	0.55	3.85	-17.80	427.0	195.5	150.6
14.60	4.67	1.56	34.0	0.70	23.8	0.90	0.55	0.00	1.00	1.00	0.00	0.00	0.90	0.55	3.86	-17.80	427.4	195.8	150.8
14.51	4.67	1.56	34.0	0.70	23.8	0.89	0.55	0.00	1.00	1.00	0.00	0.00	0.89	0.55	3.87	-17.80	427.8	196.0	151.1
14.41	4.67	1.55	34.0	0.70	23.8	0.89	0.55	0.00	1.00	1.00	0.00	0.00	0.89	0.55	3.88	-17.80	428.1	196.3	151.3
14.32	4.67	1.55	34.0	0.70	23.8	0.89	0.55	0.00	1.00	1.00	0.00	0.00	0.89	0.55	3.89	-17.80	428.5	196.5	151.6
14.22	4.67	1.54	34.0	0.70	23.8	0.88	0.54	0.00	1.00	1.00	0.00	0.00	0.88	0.54	3.90	-17.80	428.9	196.8	151.8
14.13	4.67	1.54	34.0	0.70	23.8	0.88	0.54	0.00	1.00	1.00	0.00	0.00	0.88	0.54	3.91	-17.80	429.3	197.0	152.0
14.03	4.67	1.53	34.0	0.70	23.8	0.88	0.54	0.00	1.00	1.00	0.00	0.00	0.88	0.54	3.93	-17.80	429.7	197.3	152.2
13.94	4.67	1.52	34.0	0.70	23.8	0.87	0.54	0.00	1.00	1.00	0.00	0.00	0.87	0.54	3.94	-17.80	430.1	197.5	152.5
13.85	4.67	1.52	34.0	0.70	23.8	0.87	0.54	0.00	1.00	1.00	0.00	0.00	0.87	0.54	3.95	-17.80	430.5	197.8	152.7
13.75	4.67	1.51	34.0	0.70	23.8	0.87	0.53	0.00	1.00	1.00	0.00	0.00	0.87	0.53	3.96	-17.80	430.8	198.0	152.9
13.66	4.67	1.51	34.0	0.70	23.8	0.86	0.53	0.00	1.00	1.00	0.00	0.00	0.86	0.53	3.97	-17.80	431.2	198.3	153.2
13.56	4.67	1.50	34.0	0.70	23.8	0.86	0.53	0.00	1.00	1.00	0.00	0.00	0.86	0.53	3.98	-17.80	431.6	198.5	153.4
13.47	4.67	1.50	34.0	0.70	23.8	0.86	0.53	0.00	1.00	1.00	0.00	0.00	0.86	0.53	3.99	-17.80	432.0	198.7	153.6
13.37	4.67	1.49	34.0	0.70	23.8	0.86	0.53	0.00	1.00	1.00	0.00	0.00	0.86	0.53	4.00	-17.80	432.4	199.0	153.8
13.28	4.67	1.49	34.0	0.70	23.8	0.85	0.52	0.00	1.00	1.00	0.00	0.00	0.85	0.52	4.01	-17.80	432.7	199.2	154.1
13.19	4.67	1.48	34.0	0.70	23.8	0.85	0.52	0.00	1.00	1.00	0.00	0.00	0.85	0.52	4.03	-17.80	433.1	199.5	154.3
13.09	4.67	1.47	34.0	0.70	23.8	0.85	0.52	0.00	1.00	1.00	0.00	0.00	0.85	0.52	4.04	-17.80	433.5	199.7	154.5
13.00	4.67	1.46	34.0	0.70	23.8	0.84	0.52	0.00	1.00	1.00	0.00	0.00	0.84	0.52	4.06	-17.80	433.8	200.0	154.7
12.90	4.67	1.45	34.0	0.70	23.8	0.83	0.51	0.00	1.00	1.00	0.00	0.00	0.83	0.51	4.08	-17.80	434.2	200.2	155.0
12.81	4.67	1.44	34.0	0.70	23.8	0.83	0.51	0.00	1.00	1.00	0.00	0.00	0.83	0.51	4.09	-17.80	434.6	200.4	155.2
12.72	4.67	1.43	34.0	0.70	23.8	0.82	0.50	0.00	1.00	1.00	0.00	0.00	0.82	0.50	4.11	-17.80	434.9	200.7	155.4
12.62	4.67	1.42	34.0	0.70	23.8	0.81	0.50	0.00	1.00	1.00	0.00	0.00	0.81	0.50	4.13	-17.80	435.3	200.9	155.6
12.53	4.67	1.41	34.0	0.70	23.8	0.81	0.50	0.00	1.00	1.00	0.00	0.00	0.81	0.50	4.15	-17.80	435.6	201.2	155.8
12.43	4.67	1.40	34.0	0.70	23.8	0.80	0.49	0.00	1.00	1.00	0.00	0.00	0.80	0.49	4.17	-17.80	436.0	201.4	156.0
12.34	4.67	1.38	34.0	0.70	23.8	0.79	0.49	0.00	1.00	1.00	0.00	0.00	0.79	0.49	4.19	-17.80	436.3	201.6	156.2
12.24	4.67	1.37	34.0	0.70	23.8	0.79	0.48	0.00	1.00	1.00	0.00	0.00	0.79	0.48	4.21	-17.80	436.7	201.9	156.4
12.15	4.67	1.36	34.0	0.70	23.8	0.78	0.48	0.00	1.00	1.00	0.00	0.00	0.78	0.48	4.23	-17.80	437.0	202.1	156.7
12.06	4.67	1.35	34.0	0.70	23.8	0.77	0.48	0.00	1.00	1.00	0.00	0.00	0.77	0.48	4.25	-17.80	437.4	202.3	156.9
11.96	4.67	1.34	0.0	0.70	0.0	0.00	0.00	0.75	1.00	1.00	-0.75	0.75	-0.75	0.75	4.27	-18.13	437.0	202.7	156.9
11.87	4.67	1.33	0.0	0.70	0.0	0.00	0.00	0.75	1.00	1.00	-0.75	0.75	-0.75	0.75	4.29	-18.46	436.7	203.0	156.9
11.77	4.67	1.32	0.0	0.70	0.0	0.00	0.00	0.75	1.00	1.00	-0.75	0.75	-0.75	0.75	4.31	-18.79	436.4	203.4	156.9
11.68	4.67	1.31	0.0	0.70	0.0	0.00	0.00	0.75	1.00	1.00	-0.75	0.75	-0.75	0.75	4.33	-19.12	436.1	203.7	156.9
11.59	4.67	1.30	0.0	0.70	0.0	0.00	0.00	0.75	1.00	1.00	-0.75	0.75	-0.75	0.75	4.34	-19.45	435.7	204.1	156.9
11.49	4.67	1.29	0.0	0.70	0.0	0.00	0.00	0.75	1.00	1.00	-0.75	0.75	-0.75	0.75	4.36	-19.78	435.4	204.4	156.9
11.40	4.67	1.28	0.0	0.70	0.0	0.00	0.00	0.75	1.00	1.00	-0.75	0.75	-0.75	0.75	4.38	-20.11	435.1	204.8	156.9
11.30	4.67	1.27	0.0	0.70	0.0	0.00	0.00	0.75	1.00	1.00	-0.75	0.75	-0.75	0.75	4.40	-20.44	434.7	205.1	156.9
11.21	4.67	1.26	0.0	0.70	0.0	0.00	0.00	0.75	1.00	1.00	-0.75	0.75	-0.75	0.75	4.42	-20.77	434.4	205.5	156.9
11.11	4.67	1.25	0.0	0.70	0.0	0.00	0.00	0.75	1.00	1.00	-0.75	0.75	-0.75	0.75	4.44	-21.10	434.1	205.8	156.9
11.02	4.67	1.24	0.0	0.70	0.0	0.00	0.00	0.75	1.00	1.00	-0.75	0.75	-0.75	0.75	4.46	-21.43	433.7	206.2	156.9
10.93	4.67	1.23	0.0	0.70	0.0	0.00	0.00	0.75	1.00	1.00	-0.75	0.75	-0.75	0.75	4.48	-21.76	433.4	206.5	156.9
10.83	4.67	1.22	0.0	0.70	0.0	0.00	0.00	0.75	1.00	1.00	-0.75	0.75	-0.75	0.75	4.50	-22.09	433.1	206.9	156.9
10.74	4.67	1.21	0.0	0.70	0.0	0.00	0.00	0.75	1.00	1.00	-0.75	0.75	-0.75	0.75	4.52	-22.42	432.8	207.2	156.9
10.64	4.67	1.20	0.0	0.70	0.0	0.00	0.00	0.75	1.00	1.00	-0.75	0.75	-0.75	0.75	4.54	-22.75	432.4	207.6	156.9
10.55	4.67	1.19	0.0	0.70	0.0	0.00	0.00	0.75	1.00	1.00	-0.75	0.75	-0.75	0.75	4.56	-23.08	432.1	207.9	156.9
10.45	4.67	1.18	0.0	0.70	0.0	0.00	0.00	0.75	1.00	1.00	-0.75	0.75	-0.75	0.75	4.58	-23.41	431.8	208.2	156.9
10.36	4.67	1.17	0.0	0.70	0.0	0.00	0.00	0.75	1.00	1.00	-0.75	0.75	-0.75	0.75	4.59	-23.74	431.4	208.6	156.9
10.27	4.67	1.16	0.0	0.70	0.0	0.00	0.00	0.75	1.00	1.00	-0.75	0.75	-0.75	0.75	4.61	-24.07	431.1	208.9	156.9
10.17	4.67	1.15	0.0	0.70	0.0	0.00	0.00	0.75	1.00	1.00	-0.75	0.75	-0.75	0.75	4.63	-24.39	430.8	209.3	156.9
10.08	4.67	1.14	0.0	0.70	0.0	0.00	0.00	0.75	1.00	1.00	-0.75	0.75	-0.75	0.75	4.65	-24.72	430.5	209.6	156.9
9.98	4.67	1.13	0.0	0.70	0.0	0.00	0.00	0.75	1.00	1.00	-0.75	0.75	-0.75	0.75	4.67	-25.05	430.1	210.0	156.9
9.89	4.67	1.12	0.0	0.70	0.0	0.00	0.00	0.75	1.00	1.00	-0.75	0.75	-0.75	0.75	4.69	-25.38	429.8	210.3	156.9
9.80	4.67	1.11	0.0	0.70	0.0	0.00	0.00	0.75	1.00	1.00	-0.75	0.75	-0.75	0.75	4.71	-25.71	429.5	210.7	156.9
9.70	4.67	1.10	0.0	0.70	0.0	0.00	0.00	0.75	1.00	1.00	-0.75	0.75	-0.75	0.75	4.73	-26.04	429.1	211.0	156.9
9.61	4.67	1.09	0.0	0.70	0.0	0.00	0.00	0.75	1.00	1.00	-0.75	0.75	-0.75	0.75	4.75	-26.37	428.8	211.4	156.9
9.51	4.67	1.08	0.0	0.70	0.0	0.00	0.00	0.75	1.00	1.00	-0.75	0.75	-0.75	0.75	4.77	-26.70	428.5	211.7	156.9
9.42	4.67	1.07	0.0	0.70	0.0	0.00	0.00	0.75	1.00	1.00	-0.75	0.75	-0.75	0.75	4.79	-27.03	428.1	212.1	156.9
9.32	4.67	1.06	0.0	0.70	0.0	0.00	0.00	0.75	1.00	1.00	-0.75	0.75	-0.75	0.75	4.81	-27.36	427.8	212.4	156.9
9.23	4.67	1.05	0.0	0.70	0.0	0.00	0.00	0.75	1.00	1.00	-0.75	0.75	-0.75	0.75	4.83	-27.69	427.5	212.8	156.9
9.14	4.67	1.04	0.0	0.70	0.0	0.00	0.00	0.75	1.00	1.00	-0.75	0.75	-0.75	0.75	4.84	-28.02	427.2	213.1	156.9
9.04	4.67	1.03	0.0	0.70	0.0	0.00	0.00	0.75	1.00	1.00	-0.75	0.75	-0.75	0.75	4.86	-28.35	426.8	213.5	156.9
8.95	4.67	1.01	0.0	0.70	0.0	0.00	0.00	0.75	1.00	1.00	-0.75	0.75	-0.75	0.75	4.88	-28.68	426.5	213.8	156.9
8.85	4.67	1.00	0.0	0.70	0.0	0.00	0.00	0.75	1.00	1.00	-0.75	0.75	-0.75	0.75	4.90	-29.01	426.2	214.2	156.9
8.76	4.67	0.99	0.0	0.70	0.0	0.00	0.00	0.75	1.00	1.00	-0.75	0.75	-0.75	0.75	4.92	-29.34	425.8	214.5	156.9
8.67	4.67	0.98	0.0	0.70	0.0	0.00	0.00	0.75	1.00	1.00	-0.75	0.75	-0.75	0.75	4.94	-29.67	425.5	214.9	156.9
8.57	4.67	0.97	0.0	0.70	0.0	0.00	0.00	0.75	1.00	1.00	-0.75	0.75	-0.75	0.75	4.96	-30.00	425.2	215.2	156.9
8.48	4.67	0.96	0.0	0.70	0.0	0.00	0.00	0.75	1.00	1.00	-0.75	0.75	-0.75	0.75	4.98	-30.33	424.8	215.6	156.9
8.38	4.67	0.95	0.0	0.70	0.0	0.00	0.00	0.75	1.00	1.00	-0.75	0.75	-0.75	0.75	5.00	-30.66	424.5	215.9	156.9
8.29	4.67	0.94	0.0	0.70	0.0	0.00	0.00	0.75	1.00	1.00	-0.75	0.75	-0.75	0.75	5.02	-30.99	424.2	216.3	156.9
8.19	4.67	0.93	0.0	0.70	0.0	0.00	0.00	0.75	1.00	1.00	-0.75	0.75	-0.75	0.75	5.04	-31.32	423.9	216.6	156.9
8.10	4.67	0.92	0.0	0.70	0.0	0.00	0.00	0.75	1.00	1.00	-0.75	0.75	-0.75	0.75	5.06	-31.65	423.5	217.0	156.9
8.01	4.67	0.91	0.0	0.70	0.0	0.00	0.00	0.75	1.00	1.00	-0.75	0.75	-0.75	0.75	5.07	-31.98	423.2	217.3	156.9
7.91	4.67	0.90	0.0	0.70	0.0	0.00	0.00	0.75	1.00	1.00	-0.75	0.75	-0.75	0.75	5.09	-32.31	422.9	217.7	156.9
7.82	4.67	0.89	0.0	0.70	0.0	0.00	0.00	0.75	1.00	1.00	-0.75	0.75	-0.75	0.75	5.11	-32.64	422.5	218.0	156.9
7.72	4.67	0.88	0.0	0.70	0.0	0.00	0.00	0.75	1.00	1.00	-0.75	0.75	-0.75	0.75	5.13	-32.97	422.2	218.4	156.9
7.63	4.67	0.87	0.0	0.70	0.0	0.00	0.00	0.75	1.00	1.00	-0.75	0.75	-0.75	0.75	5.15	-33.30	421.9	218.7	156.9
7.54	4.67	0.86	0.0	0.70	0.0	0.00	0.00	0.75	1.00	1.00	-0.75	0.75	-0.75	0.75	5.17	-33.63	421.6	219.1	156.9
7.44	4.67	0.85	0.0	0.70	0.0	0.00	0.00	0.75	1.00	1.00	-0.75	0.75	-0.75	0.75	5.19	-33.95	421.2	219.4	156.9
7.35	4.67	0.84	0.0	0.70	0.0	0.00	0.00	0.75	1.00	1.00	-0.75	0.75	-0.75	0.75	5.21	-34.28	420.9	219.8	156.9
7.25	4.67	0.83	0.0	0.70	0.0	0.00	0.00	0.75	1.00	1.00	-0.75	0.75	-0.75	0.75	5.23	-34.61	420.6	220.1	156.9
7.16	4.67	0.82	0.0	0.70	0.0	0.00	0.00	0.75	1.00	1.00	-0.75	0.75	-0.75	0.75	5.25	-34.94	420.2	220.5	156.9
7.06	4.67	0.81	0.0	0.70	0.0	0.00	0.00	0.75	1.00	1.00	-0.75	0.75	-0.75	0.75	5.27	-35.27	419.9	220.8	156.9
6.97	4.67	0.80	0.0	0.70	0.0	0.00	0.00	0.75	1.00	1.00	-0.75	0.75	-0.75	0.75	5.29	-35.60	419.6	221.2	156.9
6.88	4.67	0.79	0.0	0.70	0.0	0.00	0.00	0.75	1.00	1.00	-0.75	0.75	-0.75	0.75	5.31	-35.93	419.2	221.5	156.9
6.78	4.67	0.78	0.0	0.70	0.0	0.00	0.00	0.75	1.00	1.00	-0.75	0.75	-0.75	0.75	5.32	-36.26	418.9	221.9	156.9
6.69	4.67	0.77	0.0	0.70	0.0	0.00	0.00	0.75	1.00	1.00	-0.75	0.75	-0.75	0.75	5.34	-36.59	418.6	222.2	156.9
6.59	4.67	0.76	0.0	0.70	0.0	0.00	0.00	0.75	1.00	1.00	-0.75	0.75	-0.75	0.75	5.36	-36.92	418.3	222.6	156.9
6.50	4.67	0.75	0.0	0.70	0.0	0.00	0.00	0.75	1.00	1.00	-0.75	0.75	-0.75	0.75	5.38	-37.25	417.9	222.9	156.9
6.40	4.67	0.74	0.0	0.70	0.0	0.00	0.00	0.75	1.00	1.00	-0.75	0.75	-0.75	0.75	5.40	-37.58	417.6	223.3	156.9
6.31	4.67	0.73	0.0	0.70	0.0	0.00	0.00	0.75	1.00	1.00	-0.75	0.75	-0.75	0.75	5.42	-37.91	417.3	223.6	156.9
6.22	4.67	0.72	0.0	0.70	0.0	0.00	0.00	0.75	1.00	1.00	-0.75	0.75	-0.75	0.75	5.44	-38.24	416.9	223.9	156.9
6.12	4.67	0.71	0.0	0.70	0.0	0.00	0.00	0.75	1.00	1.00	-0.75	0.75	-0.75	0.75	5.46	-38.57	416.6	224.3	156.9
6.03	4.67	0.70	0.0	0.70	0.0	0.00	0.00	0.75	1.00	1.00	-0.75	0.75	-0.75	0.75	5.48	-38.90	416.3	224.6	156.9
5.93	4.67	0.69	0.0	0.70	0.0	0.00	0.00	0.75	1.00	1.00	-0.75	0.75	-0.75	0.75	5.50	-39.23	415.9	225.0	156.9
5.84	4.67	0.68	0.0	0.70	0.0	0.00	0.00	0.75	1.00	1.00	-0.75	0.75	-0.75	0.75	5.52	-39.56	415.6	225.3	156.9
5.75	4.67	0.67	0.0	0.70	0.0	0.00	0.00	0.75	1.00	1.00	-0.75	0.75	-0.75	0.75	5.54	-39.89	415.3	225.7	156.9
5.65	4.67	0.66	0.0	0.70	0.0	0.00	0.00	0.75	1.00	1.00	-0.75	0.75	-0.75	0.75	5.56	-40.22	415.0	226.0	156.9
5.56	4.67	0.65	0.0	0.70	0.0	0.00	0.00	0.75	1.00	1.00	-0.75	0.75	-0.75	0.75	5.57	-40.55	414.6	226.4	156.9
5.46	4.67	0.64	0.0	0.70	0.0	0.00	0.00	0.75	1.00	1.00	-0.75	0.75	-0.75	0.75	5.59	-40.88	414.3	226.7	156.9
5.37	4.67	0.63	0.0	0.70	0.0	0.00	0.00	0.75	1.00	1.00	-0.75	0.75	-0.75	0.75	5.61	-41.21	414.0	227.1	156.9
5.27	4.67	0.62	0.0	0.70	0.0	0.00	0.00	0.75	1.00	1.00	-0.75	0.75	-0.75	0.75	5.63	-41.54	413.6	227.4	156.9
5.18	4.67	0.61	0.0	0.70	0.0	0.00	0.00	0.75	1.00	1.00	-0.75	0.75	-0.75	0.75	5.65	-41.87	413.3	227.8	156.9
5.09	4.67	0.60	0.0	0.70	0.0	0.00	0.00	0.75	1.00	1.00	-0.75	0.75	-0.75	0.75	5.67	-42.20	413.0	228.1	156.9
4.99	4.67	0.59	0.0	0.70	0.0	0.00	0.00	0.75	1.00	1.00	-0.75	0.75	-0.75	0.75	5.69	-42.53	412.7	228.5	156.9
4.90	4.67	0.58	0.0	0.70	0.0	0.00	0.00	0.75	1.00	1.00	-0.75	0.75	-0.75	0.75	5.71	-42.86	412.3	228.8	156.9
4.80	4.67	0.57	0.0	0.70	0.0	0.00	0.00	0.75	1.00	1.00	-0.75	0.75	-0.75	0.75	5.73	-43.19	412.0	229.2	156.9
4.71	4.67	0.56	0.0	0.70	0.0	0.00	0.00	0.75	1.00	1.00	-0.75	0.75	-0.75	0.75	5.75	-43.51	411.7	229.5	156.9
4.62	4.67	0.55	0.0	0.70	0.0	0.00	0.00	0.75	1.00	1.00	-0.75	0.75	-0.75	0.75	5.77	-43.84	411.3	229.9	156.9
4.52	4.67	0.54	0.0	0.70	0.0	0.00	0.00	0.75	1.00	1.00	-0.75	0.75	-0.75	0.75	5.79	-44.17	411.0	230.2	156.9
4.43	4.67	0.53	0.0	0.70	0.0	0.00	0.00	0.75	1.00	1.00	0.00	0.00	0.00	0.00	5.81	-44.17	411.0	230.2	156.9
4.33	4.67	0.52	0.0	0.70	0.0	0.00	0.00	0.75	1.00	1.00	0.00	0.00	0.00	0.00	5.82	-44.17	411.0	230.3	156.9
4.24	4.67	0.51	0.0	0.70	0.0	0.00	0.00	0.75	1.00	1.00	0.00	0.00	0.00	0.00	5.84	-44.17	411.0	230.3	156.9

4.14	4.67	0.50	0.0	0.70	0.0	0.00	0.00	0.75	1.00	1.00	0.00	0.00	0.00	0.00	5.86	-44.17	411.0	230.3	156.9
4.05	4.67	0.49	0.0	0.70	0.0	0.00	0.00	0.75	1.00	1.00	0.00	0.00	0.00	0.00	5.88	-44.17	411.0	230.3	156.9
3.96	4.67	0.48	0.0	0.70	0.0	0.00	0.00	0.75	1.00	1.00	0.00	0.00	0.00	0.00	5.90	-44.17	411.0	230.3	156.9
3.86	4.67	0.47	0.0	0.70	0.0	0.00	0.00	0.75	1.00	1.00	0.00	0.00	0.00	0.00	5.92	-44.17	411.0	230.4	156.9
3.77	4.67	0.46	0.0	0.70	0.0	0.00	0.00	0.75	1.00	1.00	0.00	0.00	0.00	0.00	5.94	-44.17	411.0	230.4	156.9
3.67	4.67	0.45	0.0	0.70	0.0	0.00	0.00	0.75	1.00	1.00	0.00	0.00	0.00	0.00	5.96	-44.17	411.0	230.4	156.9
3.58	4.67	0.44	0.0	0.70	0.0	0.00	0.00	0.75	1.00	1.00	0.00	0.00	0.00	0.00	5.98	-44.17	411.0	230.4	156.9
3.48	4.67	0.42	0.0	0.70	0.0	0.00	0.00	0.50	1.00	1.00	0.00	0.00	0.00	0.00	6.00	-44.17	411.0	230.4	156.9
3.39	4.67	0.41	0.0	0.70	0.0	0.00	0.00	0.50	1.00	1.00	0.00	0.00	0.00	0.00	6.02	-44.17	411.0	230.5	156.9
3.30	4.67	0.40	0.0	0.70	0.0	0.00	0.00	0.50	1.00	1.00	0.00	0.00	0.00	0.00	6.04	-44.17	411.0	230.5	156.9
3.20	4.67	0.39	0.0	0.70	0.0	0.00	0.00	0.50	1.00	1.00	0.00	0.00	0.00	0.00	6.05	-44.17	411.0	230.5	156.9
3.11	4.67	0.38	0.0	0.70	0.0	0.00	0.00	0.50	1.00	1.00	0.00	0.00	0.00	0.00	6.07	-44.17	411.0	230.5	156.9
3.01	4.67	0.37	0.0	0.70	0.0	0.00	0.00	0.50	1.00	1.00	0.00	0.00	0.00	0.00	6.09	-44.17	411.0	230.5	156.9
2.92	4.67	0.36	0.0	0.70	0.0	0.00	0.00	0.50	1.00	1.00	0.00	0.00	0.00	0.00	6.11	-44.17	411.0	230.6	156.9
2.83	4.67	0.34	0.0	0.70	0.0	0.00	0.00	0.50	1.00	1.00	0.00	0.00	0.00	0.00	6.13	-44.17	411.0	230.6	156.9
2.73	4.67	0.33	0.0	0.70	0.0	0.00	0.00	0.50	1.00	1.00	0.00	0.00	0.00	0.00	6.15	-44.17	411.0	230.6	156.9
2.64	4.67	0.32	0.0	0.70	0.0	0.00	0.00	0.50	1.00	1.00	0.00	0.00	0.00	0.00	6.17	-44.17	411.0	230.6	156.9
2.54	4.67	0.31	0.0	0.70	0.0	0.00	0.00	0.50	1.00	1.00	0.00	0.00	0.00	0.00	6.19	-44.17	411.0	230.6	156.9
2.45	4.67	0.30	0.0	0.70	0.0	0.00	0.00	0.50	1.00	1.00	0.00	0.00	0.00	0.00	6.21	-44.17	411.0	230.7	156.9
2.35	4.67	0.29	0.0	0.70	0.0	0.00	0.00	0.50	1.00	1.00	0.00	0.00	0.00	0.00	6.23	-44.17	411.0	230.7	156.9
2.26	4.67	0.28	0.0	0.70	0.0	0.00	0.00	0.50	1.00	1.00	0.00	0.00	0.00	0.00	6.25	-44.17	411.0	230.7	156.9
2.17	4.67	0.27	0.0	0.70	0.0	0.00	0.00	0.50	1.00	1.00	0.00	0.00	0.00	0.00	6.27	-44.17	411.0	230.7	156.9
2.07	4.67	0.25	0.0	0.70	0.0	0.00	0.00	0.50	1.00	1.00	0.00	0.00	0.00	0.00	6.29	-44.17	411.0	230.7	156.9
1.98	4.67	0.24	0.0	0.70	0.0	0.00	0.00	0.50	1.00	1.00	0.00	0.00	0.00	0.00	6.30	-44.17	411.0	230.7	156.9
1.88	4.67	0.23	0.0	0.70	0.0	0.00	0.00	0.50	1.00	1.00	0.00	0.00	0.00	0.00	6.32	-44.17	411.0	230.8	156.9
1.79	4.67	0.22	0.0	0.70	0.0	0.00	0.00	0.50	1.00	1.00	0.00	0.00	0.00	0.00	6.34	-44.17	411.0	230.8	156.9
1.70	4.67	0.21	0.0	0.70	0.0	0.00	0.00	0.50	1.00	1.00	0.00	0.00	0.00	0.00	6.36	-44.17	411.0	230.8	156.9
1.60	4.67	0.20	0.0	0.70	0.0	0.00	0.00	0.50	1.00	1.00	0.00	0.00	0.00	0.00	6.38	-44.17	411.0	230.8	156.9
1.51	4.67	0.19	0.0	0.70	0.0	0.00	0.00	0.50	1.00	1.00	0.00	0.00	0.00	0.00	6.40	-44.17	411.0	230.8	156.9
1.41	4.67	0.18	0.0	0.70	0.0	0.00	0.00	0.50	1.00	1.00	0.00	0.00	0.00	0.00	6.42	-44.17	411.0	230.9	156.9
1.32	4.67	0.16	0.0	0.70	0.0	0.00	0.00	0.50	1.00	1.00	0.00	0.00	0.00	0.00	6.44	-44.17	411.0	230.9	156.9
1.22	4.67	0.15	0.0	0.70	0.0	0.00	0.00	0.50	1.00	1.00	0.00	0.00	0.00	0.00	6.46	-44.17	411.0	230.9	156.9
1.13	4.67	0.14	0.0	0.70	0.0	0.00	0.00	0.50	1.00	1.00	0.00	0.00	0.00	0.00	6.48	-44.17	411.0	230.9	156.9
1.04	4.67	0.13	0.0	0.70	0.0	0.00	0.00	0.50	1.00	1.00	0.00	0.00	0.00	0.00	6.50	-44.17	411.0	230.9	156.9
0.94	4.67	0.12	0.0	0.70	0.0	0.00	0.00	0.50	1.00	1.00	0.00	0.00	0.00	0.00	6.52	-44.17	411.0	231.0	156.9
0.85	4.67	0.11	0.0	0.70	0.0	0.00	0.00	0.50	1.00	1.00	0.00	0.00	0.00	0.00	6.54	-44.17	411.0	231.0	156.9
0.75	4.67	0.10	0.0	0.70	0.0	0.00	0.00	0.50	1.00	1.00	0.00	0.00	0.00	0.00	6.55	-44.17	411.0	231.0	156.9
0.66	4.67	0.08	0.0	0.70	0.0	0.00	0.00	0.50	1.00	1.00	0.00	0.00	0.00	0.00	6.57	-44.17	411.0	231.0	156.9
0.57	4.67	0.07	0.0	0.70	0.0	0.00	0.00	0.50	1.00	1.00	0.00	0.00	0.00	0.00	6.59	-44.17	411.0	231.0	156.9
0.47	4.67	0.06	0.0	0.70	0.0	0.00	0.00	0.50	1.00	1.00	0.00	0.00	0.00	0.00	6.61	-44.17	411.0	231.1	156.9
0.38	4.67	0.05	0.0	0.70	0.0	0.00	0.00	0.50	1.00	1.00	0.00	0.00	0.00	0.00	6.63	-44.17	411.0	231.1	156.9
0.28	4.67	0.04	0.0	0.70	0.0	0.00	0.00	0.50	1.00	1.00	0.00	0.00	0.00	0.00	6.65	-44.17	411.0	231.1	156.9
0.19	4.67	0.03	0.0	0.70	0.0	0.00	0.00	0.50	1.00	1.00	0.00	0.00	0.00	0.00	6.67	-44.17	411.0	231.1	156.9
0.09	4.67	0.02	0.0	0.70	0.0	0.00	0.00	0.50	1.00	1.00	0.00	0.00	0.00	0.00	6.69	-44.17	411.0	231.1	156.9
0.00	4.67	0.01	0.0	0.70	0.0	0.00	0.00	0.50	1.00	1.00	0.00	0.00	0.00	0.00	6.71	-44.17	411.0	231.2	156.9

SETTLEMENT based on Ultimate Loading by Vesic Method (1977):
Ztip=47.00 Btip= 1.17 Cp= 0.030 Cs= 0.058
Xpp=0.420-in Xps= 0.019-in Xtip= 0.439-in
Cp & Cs are average value at bearing stratum from pile tip extend to 10 Btip

At loading: Qtip=213.1-kp Qtop= 411.0-kp Qside= 197.9-kp
Xtip=0.439-in Xtop= 0.787-in Xshaft= 0.348-in

LOAD - TOTAL SETTLEMENT RELATION (from t-z, and q-w curves):
Based on Vesic Method (1977)

Xtop -in	Xshaft -in	Xtip -in	Qtip -kp	Qside -kp	Qtotal -kp
0.0005	0.0005	0.0000	0.3	0.5	0.8
0.0237	0.0195	0.0042	3.3	34.0	37.4
0.0446	0.0362	0.0084	6.4	62.7	69.2
0.0635	0.0509	0.0126	9.5	87.2	96.7
0.0805	0.0638	0.0167	12.6	107.9	120.5
0.0960	0.0751	0.0209	15.6	125.3	140.9
0.1101	0.0850	0.0251	18.7	139.9	158.6
0.1231	0.0937	0.0293	21.8	151.9	173.7
0.1349	0.1014	0.0335	24.8	161.9	186.7
0.1459	0.1082	0.0377	27.9	170.0	197.8
0.1562	0.1143	0.0419	30.9	176.5	207.4
0.1658	0.1197	0.0461	33.9	181.8	215.7
0.1748	0.1246	0.0502	36.9	185.9	222.8
0.1834	0.1290	0.0544	39.9	189.2	229.1
0.1916	0.1330	0.0586	42.8	191.7	234.5
0.1995	0.1367	0.0628	45.8	193.6	239.4
0.2072	0.1402	0.0670	48.7	195.0	243.7
0.2147	0.1435	0.0712	51.5	196.1	247.6
0.2219	0.1466	0.0754	54.4	196.8	251.2
0.2291	0.1495	0.0796	57.2	197.3	254.6
0.2361	0.1524	0.0837	60.0	197.7	257.7
0.2431	0.1551	0.0879	62.8	197.9	260.7
0.2499	0.1578	0.0921	65.5	197.9	263.5
0.2567	0.1604	0.0963	68.3	197.9	266.2
0.2634	0.1629	0.1005	70.9	197.9	268.8
0.2701	0.1654	0.1047	73.6	197.7	271.3
0.2767	0.1678	0.1089	76.2	197.5	273.7
0.2832	0.1702	0.1131	78.8	197.3	276.0
0.2897	0.1725	0.1172	81.3	197.0	278.3
0.2961	0.1747	0.1214	83.8	196.6	280.4
0.3025	0.1769	0.1256	86.3	196.2	282.5
0.3088	0.1790	0.1298	88.7	195.7	284.5
0.3150	0.1810	0.1340	91.1	195.2	286.4
0.3212	0.1831	0.1382	93.5	194.7	288.2
0.3274	0.1850	0.1424	95.8	194.2	290.0
0.3336	0.1870	0.1466	98.1	193.7	291.8
0.3397	0.1889	0.1507	100.4	193.2	293.6
0.3458	0.1909	0.1549	102.6	192.8	295.4
0.3521	0.1930	0.1591	104.8	192.9	297.7
0.3583	0.1950	0.1633	106.9	192.7	299.6
0.3644	0.1969	0.1675	109.1	192.5	301.5
0.3705	0.1988	0.1717	111.1	192.2	303.3
0.3765	0.2006	0.1759	113.2	191.9	305.1
0.3824	0.2023	0.1801	115.2	191.6	306.7
0.3883	0.2041	0.1842	117.1	191.2	308.3
0.3941	0.2057	0.1884	119.1	190.8	309.9
0.3999	0.2073	0.1926	121.0	190.3	311.3
0.4057	0.2089	0.1968	122.8	189.9	312.7
0.4114	0.2104	0.2010	124.7	189.3	314.0
0.4170	0.2119	0.2052	126.5	188.8	315.3
0.4227	0.2133	0.2094	128.2	188.2	316.5
0.4282	0.2147	0.2136	130.0	187.7	317.6
0.4338	0.2160	0.2177	131.7	187.1	318.7
0.4393	0.2173	0.2219	133.3	186.5	319.8
0.4447	0.2186	0.2261	135.0	185.9	320.8
0.4502	0.2199	0.2303	136.6	185.3	321.8
0.4556	0.2211	0.2345	138.2	184.7	322.8
0.4610	0.2223	0.2387	139.7	184.1	323.8

0.4664	0.2235	0.2429	141.2	183.6	324.8
0.4717	0.2247	0.2471	142.7	183.1	325.8
0.4771	0.2259	0.2512	144.2	182.6	326.8
0.4825	0.2270	0.2554	145.6	182.2	327.8
0.4878	0.2282	0.2596	147.0	181.8	328.8
0.4931	0.2293	0.2638	148.4	181.4	329.8
0.4985	0.2305	0.2680	149.8	181.1	330.8
0.5038	0.2316	0.2722	151.1	180.8	331.9
0.5091	0.2328	0.2764	152.4	180.5	332.9
0.5144	0.2339	0.2806	153.7	180.3	334.0
0.5197	0.2349	0.2847	154.9	180.0	334.9
0.5249	0.2360	0.2889	156.2	179.7	335.9
0.5301	0.2370	0.2931	157.4	179.4	336.8
0.5352	0.2379	0.2973	158.6	179.0	337.6
0.5403	0.2388	0.3015	159.7	178.5	338.2
0.5453	0.2396	0.3057	160.9	177.8	338.7
0.5501	0.2402	0.3099	162.0	176.9	338.9
0.5548	0.2408	0.3140	163.1	175.7	338.9
0.5604	0.2422	0.3182	164.2	176.5	340.7
0.5655	0.2431	0.3224	165.3	176.3	341.6
0.5707	0.2440	0.3266	166.4	176.1	342.5
0.5758	0.2450	0.3308	167.4	175.9	343.3
0.5808	0.2458	0.3350	168.4	175.8	344.2
0.5859	0.2467	0.3392	169.4	175.6	345.0
0.5910	0.2476	0.3434	170.4	175.4	345.8
0.5960	0.2484	0.3475	171.4	175.2	346.6
0.6010	0.2493	0.3517	172.4	175.0	347.4
0.6060	0.2501	0.3559	173.3	174.8	348.2
0.6110	0.2509	0.3601	174.3	174.6	348.9
0.6160	0.2517	0.3643	175.2	174.5	349.7
0.6210	0.2525	0.3685	176.1	174.3	350.4
0.6259	0.2533	0.3727	177.0	174.1	351.1
0.6309	0.2540	0.3769	177.9	173.9	351.8
0.6358	0.2548	0.3810	178.8	173.7	352.5
0.6408	0.2555	0.3852	179.6	173.5	353.2
0.6457	0.2563	0.3894	180.5	173.3	353.8
0.6506	0.2570	0.3936	181.3	173.2	354.5
0.7413	0.2689	0.4723	195.5	169.7	365.2
0.8290	0.2779	0.5511	206.6	166.2	372.8
0.9122	0.2824	0.6298	213.1	162.7	375.8
0.9884	0.2799	0.7085	212.2	159.2	371.4
1.0562	0.2690	0.7872	202.6	155.7	358.3

At Qwork= 165.00-kp Settlement= 0.11564-in
At Qwork= 165.00-kp Secant Stiffness Kqx= 1426.88-kp/-in
At Xallow= 1.00-in Q= 369.16-kp
Note: If the program cannot find a result or the result exceeds the upper limit. The result will be displayed as 99999.

SUMMARY:

Total Ultimate Capacity (Down)= 411.003-kp Total Ultimate Capacity (Up)= 231.150-kp
Total Allowable Capacity (Down)= 169.991-kp Total Allowable Capacity (Up)= 118.929-kp

Weight above Ground= 0.00 Total Pile Weight= 6.71-kp *Soil Weight is not included
Side Resistance (Down)= 197.939-kp Side Resistance (Up)= 224.442-kp
Tip Resistance (Down)= 213.063-kp Tip Resistance (Up)= 0.000-kp
Negative Friction, Qneg= -44.174-kp, which has been subtracted from Total Ultimate Capacity (Down)
Negative friction does not affect Total Uplift Ultimate Capacity (Up)

OK! Qallow > Q * Vertical Load, Q= 165.0 -kp

FACTOR OF SAFETY:

FSside	FStip	FSup	FSweight
2.0	3.0	2.0	**1.0**

* FStorsion = FSside

Notes:
* Settlement in the program is Elastic Settlement only. Consolidation Settlement is not calculated!
Length - Pile length, distance from pile top to tip (not from ground surface)
Width or D - Width of pile shaft (pile diameter)
Ds and Dl - Short Side and Long Side of Footing
Area - Section area of pile shaft or tip area of pile
Sv - Vertical stress in soils (It may be limited based on critical depth, Z_lim or Z/D
qult - Ultimate tip resistance (pressure)
Qtip_dw - Ultimate downward tip resistance (Force or Capacity)
Qtip_up - Ultimate uplift tip resistance for belled pile or uplift plate (Force or Capacity)
Torsion - Ultimate torsion resistance for single pile (Capacity)
dz - Small Segment of Depth for Calculation
Zs - Soil Depth, Depth from ground surface
Zp - Pile Depth, Depth from pile top
Prem - Primer of pile shaft
Phi - Soil internal friction angle (between soils)
Kf - Friction factor to convert Phi to Delta
Delta - Ski friction between soil and pile (function of Phi. It is different from Phi)
f_dw - Downward Resistance between soil and pile from Delta
f_up - Uplift Resistance between soil and pile from Delta
C - Soil cohesion (between soils)
Ca - Adhesion between soil and pile (function of C. It is different from C) Ca=KaKcC
Ka - Adhesion ratio, C/Ca
Kc - Adhesion factor defended by users
Ca_dw - Downward adhesion between pile and soil
Ca_up - Uplift adhesion between pile and soil
Sf_dw - Downward side resistance (sum of friction and adhesion, f_dw + Ca_dw)
Sf_up - Uplift side resistance (sum of friction and adhesion, f_up + Ca_up)
Torsion side resistance = (Sf_dw+Sf_up)/2 * pile diameter/2
Weight - Weight of Pile shaft
Qneg - negative friction Resistance
Qside - Ultimate side resistance (Qside_dw or Qside_up)
Qtip - Ultimate tip resistance (Qtip_dw or Qtip_up for uplift plate)
Q_dw - Ultimate downward capacity (Qtip + Qside_dw)
Q_up - Ultimate uplift capacity (Weight + Qside_up)
E - Elastic modules
Xs - Settlement due to axial deformation of pile shaft
Xpp - Settlement due to point load from pile tip
Xps- Settlement due to load from pile shaft
Xtop - Total settlement, Xs + Xpp + Xps
Xtip - Tip settlement, Xpp + Xps
Xshaft - Shaft deformation, Xs
Xallow - Allowable settlement specified by users
Qwork - Vertical working load applied to pile
Qallow - Vertical allowable load, Qult/F.S.

VERTICAL ANALYSIS

Figure 1

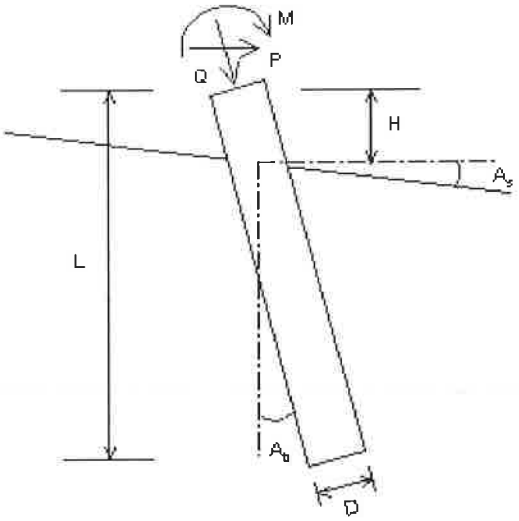

Driving Concrete Pile

Loads:
Load Factor for Vertical Loads= 1.0
Load Factor for Lateral Loads= 1.0
Loads Supported by Pile Cap= 0 %
Shear Condition: Static

(with Load Factor)
Vertical Load, Q= 109.0 -kp

Profile:
Pile Length, L= 45.0 -ft
Top Height, H= 0 -ft
Slope Angle, As= 0
Batter Angle, Ab= 0

* Zero Friction *
Zero Friction Start: 0 -ft End: 4.5 -ft
* Negative Friction *
Negative Friction Start: 4.5 -ft End: 19.5 -ft with Factor: 1

Soil Data:

Depth -ft	Gamma -lb/f3	Phi	C -kp/f2	K -lb/i3	e50 or Dr %	Nspt
0	90.0	0.0	0.500	313.1	0.87	10
4.5	117.0	0.0	0.50	103.7	1.30	5
10	117.0	0.0	0.500	136.8	1.19	6
12	52.6	32.0	0.00	32.9	35.04	10
19.5	56.8	32.0	0.00	50.8	45.73	15
22	70.4	32.0	0.500	867.8	0.56	21
27	60.4	35.0	0.00	90.0	63.67	28
32	70.2	0.0	1.500	814.1	0.57	20
40	60.7	37.0	0.00	97.3	66.49	31
42.5	66.4	37.0	0.00	148.9	83.39	48

Pile Data:

Depth -ft	Width -in	Area -in2	Per. -in	I -in4	E -kp/i2	Weight -kp/f
0.0	14	196.0	56.0	3201.3	3000	0.204
45.0						

Vertical Capacity:
Weight above Ground= 0.00 Total Weight= 6.21-kp *Soil Weight is not included
Side Resistance (Down)= 111.441-kp Side Resistance (Up)= 157.610-kp
Tip Resistance (Down)= 195.744-kp Tip Resistance (Up)= 0.000-kp
Total Ultimate Capacity (Down) Qult= 307.185-kp Total Ultimate Capacity (Up)= 163.819-kp
Total Allowable Capacity (Down) Qallow= 120.968-kp Total Allowable Capacity (Up) Qallow= 85.013-kp
OK! Qallow > Q

Settlement Calculation:
At Q= 109.00-kp Settlement= 0.08787-in
At Xallow= 1.00-in Q= 99999.00000-kp

Note: If the program cannot find a result or the result exceeds the upper limit. The result will be displayed as 99999.

ALLOWABLE CAPACITY vs FOUNDATION DEPTH

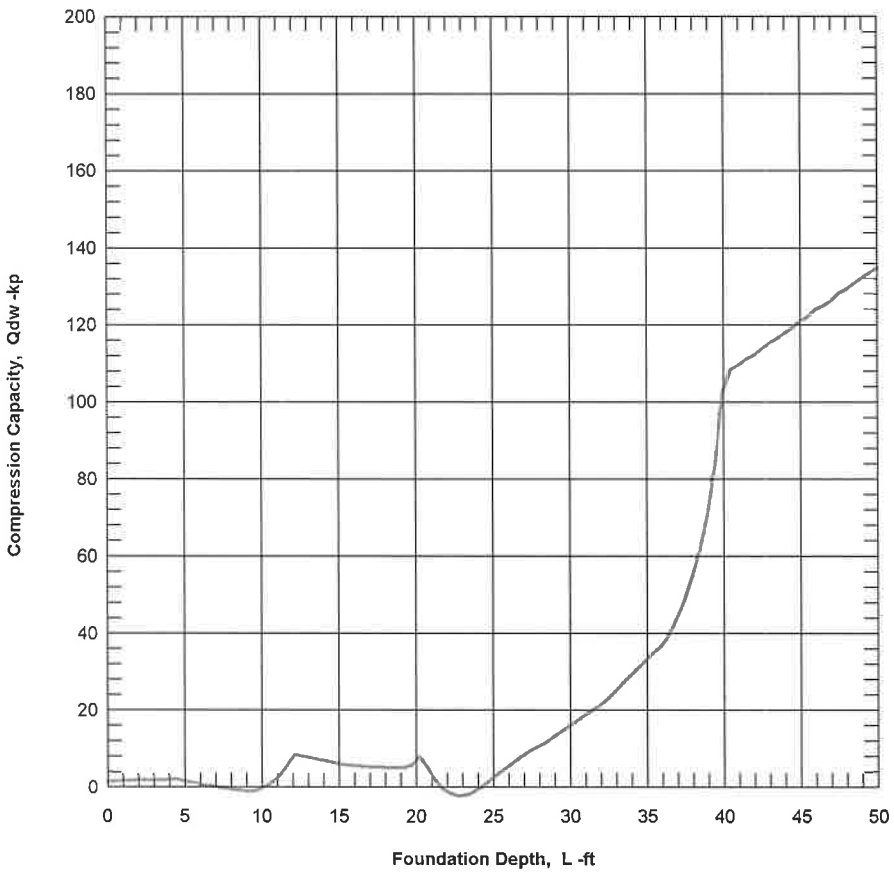

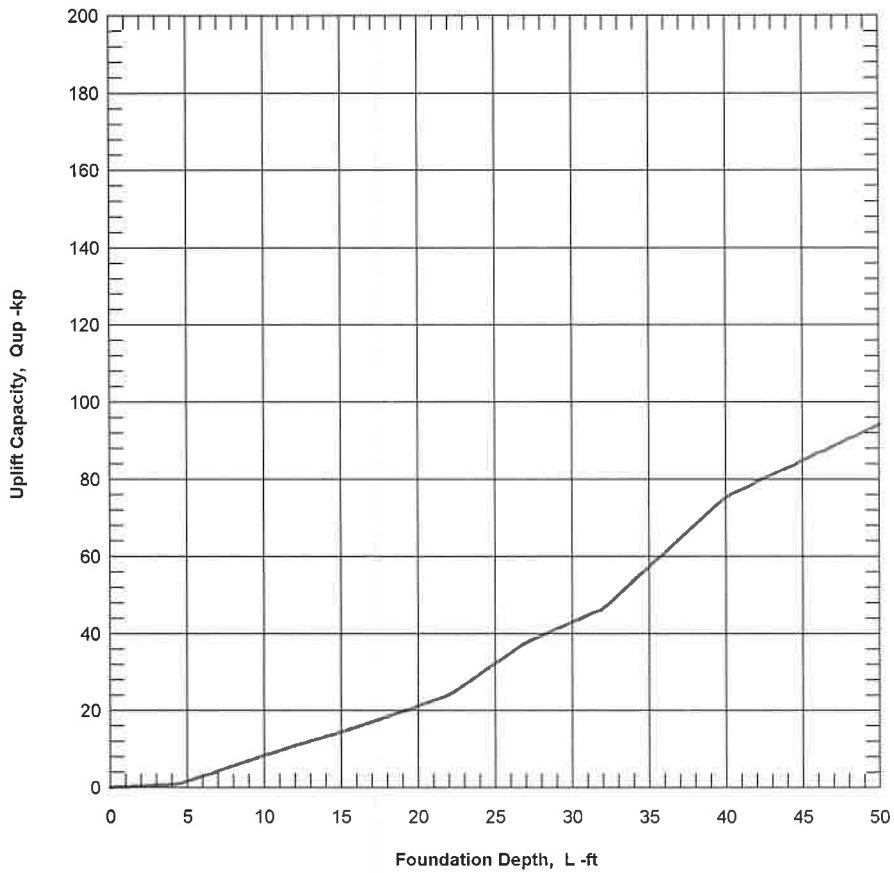

CivilTech Software

16G136 - 14-in square Driven Conc. Pile
45-ft-deep; Using B-4 and B-3 data

Figure 1

```
*****************************************************************
                    ALLPILE 7
      VERTICAL ANALYSIS DETAILED OUTPUT
       Copyright by CivilTech Software
              www.civiltech.com
*****************************************************************
Licensed to
Date: 7/8/2019  File: P:\Geotechnical\2016 Geotechnical\16G136 Alston 2 CI Bldgs Long Beach\Deep Foundation Design\Apr 28 2016\Boring B-4 and B-3\14insquare_45ftdeep_driven pile_01.alp
        1.0

Title 1: 16G136 - 14-in square Driven Conc. Pile
Title 2: 45-ft-deep; Using B-4 and B-3 data

ALLPILE INPUT DATA:
**_____________________________________________________**

* Pile Type Page *
Unit: English
Displacement pile: Higher friction. Stinger helps smoothen driving.  Pile has two sections.  H-section on tip.
Pile Type: Driving Concrete Pile

* Pile Profile *
Foundation Depth: 45.0 -ft
Top Height: 0 -ft
Slope Angle: 0
Pile Angle: 0

* Pile Properties *
Zs      Width   Area    Perim.    I       E       Weight  Mix     Out     In      Other.  Type
-ft     -in     -in2    -in       -in4    -kp/i2  -kp/f   %       Side    Side    Par.
_____________________________________________________________________________________________
0.0     14      196.0   56.0      3201.3  3000    0.204   0.0     4       4       0       Concrete (smooth)
45.0                                                                                      Pile Tip
Note:  Mix = % of Inside material/Outside material

Group Type: 0
Top Type: 1

Water Table: 10 -ft
Ground Elevation: 0 -ft

* Soil Properties *
Zs      Gamma   Phi     C       K       E50/Dr  Nspt    Type    Soil
-ft     -lb/f3  o       -kp/f2  -lb/i3   - %
0.0     90.0    0.0     0.500   313.1   0.87    10      3       Fill
4.5     117.0   0.0     0.50    103.7   1.30    5       1       Alluvium
10.0    117.0   0.0     0.500   136.8   1.19    6       1       Alluvium
12.0    52.6    32.0    0.00    32.9    35.04   10      4       Alluvium
19.5    56.8    32.0    0.00    50.8    45.73   15      4       Alluvium
22.0    70.4    32.0    0.500   867.8   0.56    21      3       Alluvium
27.0    60.4    35.0    0.00    90.0    63.67   28      4       Alluvium
32.0    70.2    0.0     1.500   814.1   0.57    20      2       Alluvium
40.0    60.7    37.0    0.00    97.3    66.49   31      4       Alluvium
42.5    66.4    37.0    0.00    148.9   83.39   48      4       Alluvium

Surcharge Pressure on ground: 0 -kp/f2

* Zero Friction *
Zero Friction Start: 0 -ft      End: 4.5 -ft

* Negative Friction *
Negative Friction Start: 4.5 -ft        End: 19.5 -ft   with Factor: 1

ALLPILE ANALYSIS AND RESULTS:
**_____________________________________________________**

Pile Profile and Loading:
        Piletype: Driving Concrete Pile
        Pile Length, L= 45.0 -ft
        Top Height, H= 0 -ft
        Slope Angle, As= 0
        Batter Angle, Ab= 0.00

        *To consider the influence of different soils below the pile tip, bearing stratum is defined
        from pile tip extending to 10 Diameter of pile, which is 11.7-ft (Input Page F, Item 3)

Single Pile, Vertical Analysis:
        Vertical Load with Load factor, Q= 109.0 -kp
        Vertical Load with Load factor and Pile Cap, Q= 109.0 -kp
          Load Factor for Vertical Loads= 1.0
          Vertical Loads Supported by Pile Cap: 0 %
          Kdown= 1.3      Kup= 0.8        Ka= 1.00


From Ztip=45.0 to 56.7-ft  Average Properties: Es= 767.92-kp/f2  C=0.00-kp/f2  Friction=37.00 Cp=0.03  Ksand=1.00
Limits of Max. tip resistance, q_lim= N/A
Batter Angle, Ab= 0.00    Batter Factor, Kbat= 1.00
Qtip_dw=195.7-kp  based on qult=143.8-kp/f2  and Base Area=1.4-ft2
Qtip_up=0.0-kp  and Base Area=0.0-ft2


TIP RESISTANCE (Down) CALCULATION:
Tip Depth= 45.0-ft Critical Depth Ratio Z/D= 20 Critical Depth= 23.3-ft
Equivalent Width of Tip= 1.17-ft,   Tip Area= 1.36-ft2   Tip Diameter= 1.17-ft
Bearing stratum from pile tip extending to 10 Diameter of pile. Bearing stratum= 11.67-ft
Btip: width at pile tip= 1.17-ft (For group pile, it is equivalent width).
Phi & C are average value in bearing stratum.
Batter Angle= 0.00,    Batter Factor for Tip and Side= 1.00

Ztip    Z/D     Z_lim   q_lim   Width   Area'   Phi     C       Nq      Nc      Sv      qult    Qtip_dw
-ft             -ft     -kp/f2  -ft     -ft2    - o     -kp/f2                  -kp/f2  -kp/f2  -kp
_____________________________________________________________________________________________
45.0    20.0    23.3    N/A     1.17    1.36    37.0    0.00    75.0    9.0     1.9     143.8   195.7

 Ztip - Depth of pile tip from ground surface (Zs)
 D - Pile average diameter (below ground) for calculation of critical depth.  D=1.17-ft
 Z/D - Critical depth (for tip resistances) as ratio of depth/diameter. Vertical stress will be constant below critical depth
 Z_lim - Critical depth, calculated from Z/D (for tip resistances)
 q_lim -  Limit of Maximum tip resistance
 Btip: width or diameter at pile tip
 Bearing stratum: A stratum from  pile tip extending to some depth. Average soil properties in the stratum are used for bearing calculation


SIDE RESISTANCE (Uplift & Down) CALCULATION:
D       Z/D     Z_lim   Sf_lim  K_dw    K_up    dz
-ft             -ft     -kp/f2                  -ft
_____________________________________________________
```

1.17 20.0 23.33 N/A 1.3 0.8 0.090

D - Pile average diameter for calculation of critical depth
Z/D - Critical depth (for side resistances) as ratio of depth/diameter. Vertical stress will be constant below critical depth
Z_lim - Critical depth calculated from Z/D (for side resistances)
Sf_lim - Limit of Maximum side resistance

Users Setting: Ka=1, which is constant. Ca=KcKaC=KcC

SIDE RESISTANCE (Up & Down) CALCULATION vs DEPTH:
Calculation is based on segment dZ= 0.09

Zs -ft	Prem -ft	Sv -kp/f2	Phi - o	Kf(<2) Delta	Delta - o	f_dw -kp/f2	f_up -kp/f2	C -kp/f2	Ka	Kc(<2) Ca	Ca_dw -kp/f2	Ca_up -kp/f2	Sf_dw -kp/f2	Sf_up -kp/f2	Weight -kp	Qneg -kp	Q_dw -kp	Q_up -kp	Torsion -kp-f
45.00	4.67	1.92	37.0	0.70	25.9	1.21	0.74	0.00	1.00	1.00	0.00	0.00	0.00	0.00	0.00	0.00	195.7	0.0	0.0
44.91	4.67	1.92	37.0	0.70	25.9	1.21	0.74	0.00	1.00	1.00	0.00	0.00	1.21	0.74	0.01	0.00	196.3	0.3	0.3
44.82	4.67	1.92	37.0	0.70	25.9	1.21	0.74	0.00	1.00	1.00	0.00	0.00	1.21	0.74	0.02	0.00	196.8	0.6	0.6
44.73	4.67	1.92	37.0	0.70	25.9	1.21	0.74	0.00	1.00	1.00	0.00	0.00	1.21	0.74	0.03	0.00	197.3	1.0	0.9
44.64	4.67	1.92	37.0	0.70	25.9	1.21	0.74	0.00	1.00	1.00	0.00	0.00	1.21	0.74	0.04	0.00	197.8	1.3	1.2
44.55	4.67	1.92	37.0	0.70	25.9	1.21	0.74	0.00	1.00	1.00	0.00	0.00	1.21	0.74	0.05	0.00	198.3	1.6	1.5
44.46	4.67	1.92	37.0	0.70	25.9	1.21	0.74	0.00	1.00	1.00	0.00	0.00	1.21	0.74	0.06	0.00	198.8	1.9	1.8
44.37	4.67	1.92	37.0	0.70	25.9	1.21	0.74	0.00	1.00	1.00	0.00	0.00	1.21	0.74	0.08	0.00	199.3	2.3	2.1
44.28	4.67	1.92	37.0	0.70	25.9	1.21	0.74	0.00	1.00	1.00	0.00	0.00	1.21	0.74	0.09	0.00	199.8	2.6	2.4
44.19	4.67	1.92	37.0	0.70	25.9	1.21	0.74	0.00	1.00	1.00	0.00	0.00	1.21	0.74	0.10	0.00	200.3	2.9	2.7
44.10	4.67	1.92	37.0	0.70	25.9	1.21	0.74	0.00	1.00	1.00	0.00	0.00	1.21	0.74	0.11	0.00	200.8	3.2	3.1
44.01	4.67	1.92	37.0	0.70	25.9	1.21	0.74	0.00	1.00	1.00	0.00	0.00	1.21	0.74	0.12	0.00	201.3	3.6	3.4
43.92	4.67	1.92	37.0	0.70	25.9	1.21	0.74	0.00	1.00	1.00	0.00	0.00	1.21	0.74	0.13	0.00	201.9	3.9	3.7
43.83	4.67	1.92	37.0	0.70	25.9	1.21	0.74	0.00	1.00	1.00	0.00	0.00	1.21	0.74	0.14	0.00	202.4	4.2	4.0
43.74	4.67	1.92	37.0	0.70	25.9	1.21	0.74	0.00	1.00	1.00	0.00	0.00	1.21	0.74	0.15	0.00	202.9	4.5	4.3
43.65	4.67	1.92	37.0	0.70	25.9	1.21	0.74	0.00	1.00	1.00	0.00	0.00	1.21	0.74	0.16	0.00	203.4	4.9	4.6
43.56	4.67	1.92	37.0	0.70	25.9	1.21	0.74	0.00	1.00	1.00	0.00	0.00	1.21	0.74	0.17	0.00	203.9	5.2	4.9
43.47	4.67	1.92	37.0	0.70	25.9	1.21	0.74	0.00	1.00	1.00	0.00	0.00	1.21	0.74	0.18	0.00	204.4	5.5	5.2
43.38	4.67	1.92	37.0	0.70	25.9	1.21	0.74	0.00	1.00	1.00	0.00	0.00	1.21	0.74	0.19	0.00	204.9	5.8	5.5
43.29	4.67	1.92	37.0	0.70	25.9	1.21	0.74	0.00	1.00	1.00	0.00	0.00	1.21	0.74	0.20	0.00	205.4	6.2	5.8
43.20	4.67	1.92	37.0	0.70	25.9	1.21	0.74	0.00	1.00	1.00	0.00	0.00	1.21	0.74	0.21	0.00	205.9	6.5	6.1
43.11	4.67	1.92	37.0	0.70	25.9	1.21	0.74	0.00	1.00	1.00	0.00	0.00	1.21	0.74	0.23	0.00	206.4	6.8	6.4
43.02	4.67	1.92	37.0	0.70	25.9	1.21	0.74	0.00	1.00	1.00	0.00	0.00	1.21	0.74	0.24	0.00	206.9	7.1	6.7
42.93	4.67	1.92	37.0	0.70	25.9	1.21	0.74	0.00	1.00	1.00	0.00	0.00	1.21	0.74	0.25	0.00	207.5	7.5	7.0
42.84	4.67	1.92	37.0	0.70	25.9	1.21	0.74	0.00	1.00	1.00	0.00	0.00	1.21	0.74	0.26	0.00	208.0	7.8	7.3
42.75	4.67	1.92	37.0	0.70	25.9	1.21	0.74	0.00	1.00	1.00	0.00	0.00	1.21	0.74	0.27	0.00	208.5	8.1	7.6
42.66	4.67	1.92	37.0	0.70	25.9	1.21	0.74	0.00	1.00	1.00	0.00	0.00	1.21	0.74	0.28	0.00	209.0	8.4	7.9
42.57	4.67	1.92	37.0	0.70	25.9	1.21	0.74	0.00	1.00	1.00	0.00	0.00	1.21	0.74	0.29	0.00	209.5	8.8	8.2
42.47	4.67	1.92	37.0	0.70	25.9	1.21	0.74	0.00	1.00	1.00	0.00	0.00	1.21	0.74	0.30	0.00	210.0	9.1	8.6
42.38	4.67	1.92	37.0	0.70	25.9	1.21	0.74	0.00	1.00	1.00	0.00	0.00	1.21	0.74	0.31	0.00	210.5	9.4	8.9
42.29	4.67	1.92	37.0	0.70	25.9	1.21	0.74	0.00	1.00	1.00	0.00	0.00	1.21	0.74	0.32	0.00	211.0	9.7	9.2
42.20	4.67	1.92	37.0	0.70	25.9	1.21	0.74	0.00	1.00	1.00	0.00	0.00	1.21	0.74	0.33	0.00	211.5	10.0	9.5
42.11	4.67	1.92	37.0	0.70	25.9	1.21	0.74	0.00	1.00	1.00	0.00	0.00	1.21	0.74	0.34	0.00	212.0	10.4	9.8
42.02	4.67	1.92	37.0	0.70	25.9	1.21	0.74	0.00	1.00	1.00	0.00	0.00	1.21	0.74	0.35	0.00	212.6	10.7	10.1
41.93	4.67	1.92	37.0	0.70	25.9	1.21	0.74	0.00	1.00	1.00	0.00	0.00	1.21	0.74	0.37	0.00	213.1	11.0	10.4
41.84	4.67	1.92	37.0	0.70	25.9	1.21	0.74	0.00	1.00	1.00	0.00	0.00	1.21	0.74	0.38	0.00	213.6	11.3	10.7
41.75	4.67	1.92	37.0	0.70	25.9	1.21	0.74	0.00	1.00	1.00	0.00	0.00	1.21	0.74	0.39	0.00	214.1	11.7	11.0
41.66	4.67	1.92	37.0	0.70	25.9	1.21	0.74	0.00	1.00	1.00	0.00	0.00	1.21	0.74	0.40	0.00	214.6	12.0	11.3
41.57	4.67	1.92	37.0	0.70	25.9	1.21	0.74	0.00	1.00	1.00	0.00	0.00	1.21	0.74	0.41	0.00	215.1	12.3	11.6
41.48	4.67	1.92	37.0	0.70	25.9	1.21	0.74	0.00	1.00	1.00	0.00	0.00	1.21	0.74	0.42	0.00	215.6	12.6	11.9
41.39	4.67	1.92	37.0	0.70	25.9	1.21	0.74	0.00	1.00	1.00	0.00	0.00	1.21	0.74	0.43	0.00	216.1	13.0	12.2
41.30	4.67	1.92	37.0	0.70	25.9	1.21	0.74	0.00	1.00	1.00	0.00	0.00	1.21	0.74	0.44	0.00	216.6	13.3	12.5
41.21	4.67	1.92	37.0	0.70	25.9	1.21	0.74	0.00	1.00	1.00	0.00	0.00	1.21	0.74	0.45	0.00	217.1	13.6	12.8
41.12	4.67	1.92	37.0	0.70	25.9	1.21	0.74	0.00	1.00	1.00	0.00	0.00	1.21	0.74	0.46	0.00	217.6	13.9	13.1
41.03	4.67	1.92	37.0	0.70	25.9	1.21	0.74	0.00	1.00	1.00	0.00	0.00	1.21	0.74	0.47	0.00	218.2	14.3	13.4
40.94	4.67	1.92	37.0	0.70	25.9	1.21	0.74	0.00	1.00	1.00	0.00	0.00	1.21	0.74	0.48	0.00	218.7	14.6	13.7
40.85	4.67	1.92	37.0	0.70	25.9	1.21	0.74	0.00	1.00	1.00	0.00	0.00	1.21	0.74	0.49	0.00	219.2	14.9	14.1
40.76	4.67	1.92	37.0	0.70	25.9	1.21	0.74	0.00	1.00	1.00	0.00	0.00	1.21	0.74	0.50	0.00	219.7	15.2	14.4
40.67	4.67	1.92	37.0	0.70	25.9	1.21	0.74	0.00	1.00	1.00	0.00	0.00	1.21	0.74	0.52	0.00	220.2	15.6	14.7
40.58	4.67	1.92	37.0	0.70	25.9	1.21	0.74	0.00	1.00	1.00	0.00	0.00	1.21	0.74	0.53	0.00	220.7	15.9	15.0
40.49	4.67	1.92	37.0	0.70	25.9	1.21	0.74	0.00	1.00	1.00	0.00	0.00	1.21	0.74	0.54	0.00	221.2	16.2	15.3
40.40	4.67	1.92	37.0	0.70	25.9	1.21	0.74	0.00	1.00	1.00	0.00	0.00	1.21	0.74	0.55	0.00	221.7	16.5	15.6
40.31	4.67	1.92	37.0	0.70	25.9	1.21	0.74	0.00	1.00	1.00	0.00	0.00	1.21	0.74	0.56	0.00	222.2	16.9	15.9
40.22	4.67	1.92	37.0	0.70	25.9	1.21	0.74	0.00	1.00	1.00	0.00	0.00	1.21	0.74	0.57	0.00	222.7	17.2	16.2
40.13	4.67	1.92	37.0	0.70	25.9	1.21	0.74	0.00	1.00	1.00	0.00	0.00	1.21	0.74	0.58	0.00	223.2	17.5	16.5
40.04	4.67	1.92	37.0	0.70	25.9	1.21	0.74	0.00	1.00	1.00	0.00	0.00	1.21	0.74	0.59	0.00	223.8	17.8	16.8
39.95	4.67	1.92	0.0	0.70	0.0	0.00	0.00	1.50	1.00	1.00	1.50	1.50	1.50	1.50	0.60	0.00	224.4	18.5	17.3
39.86	4.67	1.92	0.0	0.70	0.0	0.00	0.00	1.50	1.00	1.00	1.50	1.50	1.50	1.50	0.61	0.00	225.0	19.1	17.7
39.77	4.67	1.92	0.0	0.70	0.0	0.00	0.00	1.50	1.00	1.00	1.50	1.50	1.50	1.50	0.62	0.00	225.6	19.8	18.2
39.68	4.67	1.92	0.0	0.70	0.0	0.00	0.00	1.50	1.00	1.00	1.50	1.50	1.50	1.50	0.63	0.00	226.3	20.4	18.7
39.59	4.67	1.92	0.0	0.70	0.0	0.00	0.00	1.50	1.00	1.00	1.50	1.50	1.50	1.50	0.64	0.00	226.9	21.0	19.1
39.50	4.67	1.92	0.0	0.70	0.0	0.00	0.00	1.50	1.00	1.00	1.50	1.50	1.50	1.50	0.65	0.00	227.5	21.7	19.6
39.41	4.67	1.92	0.0	0.70	0.0	0.00	0.00	1.50	1.00	1.00	1.50	1.50	1.50	1.50	0.67	0.00	228.2	22.3	20.1
39.32	4.67	1.92	0.0	0.70	0.0	0.00	0.00	1.50	1.00	1.00	1.50	1.50	1.50	1.50	0.68	0.00	228.8	23.0	20.6
39.23	4.67	1.92	0.0	0.70	0.0	0.00	0.00	1.50	1.00	1.00	1.50	1.50	1.50	1.50	0.69	0.00	229.4	23.6	21.0
39.14	4.67	1.92	0.0	0.70	0.0	0.00	0.00	1.50	1.00	1.00	1.50	1.50	1.50	1.50	0.70	0.00	230.1	24.2	21.5
39.05	4.67	1.92	0.0	0.70	0.0	0.00	0.00	1.50	1.00	1.00	1.50	1.50	1.50	1.50	0.71	0.00	230.7	24.9	22.0
38.96	4.67	1.92	0.0	0.70	0.0	0.00	0.00	1.50	1.00	1.00	1.50	1.50	1.50	1.50	0.72	0.00	231.3	25.5	22.4
38.87	4.67	1.92	0.0	0.70	0.0	0.00	0.00	1.50	1.00	1.00	1.50	1.50	1.50	1.50	0.73	0.00	232.0	26.2	22.9
38.78	4.67	1.92	0.0	0.70	0.0	0.00	0.00	1.50	1.00	1.00	1.50	1.50	1.50	1.50	0.74	0.00	232.6	26.8	23.4
38.69	4.67	1.92	0.0	0.70	0.0	0.00	0.00	1.50	1.00	1.00	1.50	1.50	1.50	1.50	0.75	0.00	233.2	27.5	23.8
38.60	4.67	1.92	0.0	0.70	0.0	0.00	0.00	1.50	1.00	1.00	1.50	1.50	1.50	1.50	0.76	0.00	233.9	28.1	24.3
38.51	4.67	1.92	0.0	0.70	0.0	0.00	0.00	1.50	1.00	1.00	1.50	1.50	1.50	1.50	0.77	0.00	234.5	28.7	24.8
38.42	4.67	1.92	0.0	0.70	0.0	0.00	0.00	1.50	1.00	1.00	1.50	1.50	1.50	1.50	0.78	0.00	235.1	29.4	25.2
38.33	4.67	1.92	0.0	0.70	0.0	0.00	0.00	1.50	1.00	1.00	1.50	1.50	1.50	1.50	0.79	0.00	235.7	30.0	25.7
38.24	4.67	1.92	0.0	0.70	0.0	0.00	0.00	1.50	1.00	1.00	1.50	1.50	1.50	1.50	0.81	0.00	236.4	30.7	26.2
38.15	4.67	1.92	0.0	0.70	0.0	0.00	0.00	1.50	1.00	1.00	1.50	1.50	1.50	1.50	0.82	0.00	237.0	31.3	26.6
38.06	4.67	1.92	0.0	0.70	0.0	0.00	0.00	1.50	1.00	1.00	1.50	1.50	1.50	1.50	0.83	0.00	237.6	32.0	27.1
37.97	4.67	1.92	0.0	0.70	0.0	0.00	0.00	1.50	1.00	1.00	1.50	1.50	1.50	1.50	0.84	0.00	238.3	32.6	27.6
37.88	4.67	1.92	0.0	0.70	0.0	0.00	0.00	1.50	1.00	1.00	1.50	1.50	1.50	1.50	0.85	0.00	238.9	33.2	28.1
37.79	4.67	1.92	0.0	0.70	0.0	0.00	0.00	1.50	1.00	1.00	1.50	1.50	1.50	1.50	0.86	0.00	239.5	33.9	28.5
37.70	4.67	1.92	0.0	0.70	0.0	0.00	0.00	1.50	1.00	1.00	1.50	1.50	1.50	1.50	0.87	0.00	240.2	34.5	29.0
37.61	4.67	1.92	0.0	0.70	0.0	0.00	0.00	1.50	1.00	1.00	1.50	1.50	1.50	1.50	0.88	0.00	240.8	35.2	29.5
37.52	4.67	1.92	0.0	0.70	0.0	0.00	0.00	1.50	1.00	1.00	1.50	1.50	1.50	1.50	0.89	0.00	241.4	35.8	29.9
37.42	4.67	1.92	0.0	0.70	0.0	0.00	0.00	1.50	1.00	1.00	1.50	1.50	1.50	1.50	0.90	0.00	242.1	36.4	30.4
37.33	4.67	1.92	0.0	0.70	0.0	0.00	0.00	1.50	1.00	1.00	1.50	1.50	1.50	1.50	0.91	0.00	242.7	37.1	30.9
37.24	4.67	1.92	0.0	0.70	0.0	0.00	0.00	1.50	1.00	1.00	1.50	1.50	1.50	1.50	0.92	0.00	243.3	37.7	31.3
37.15	4.67	1.92	0.0	0.70	0.0	0.00	0.00	1.50	1.00	1.00	1.50	1.50	1.50	1.50	0.93	0.00	244.0	38.4	31.8
37.06	4.67	1.92	0.0	0.70	0.0	0.00	0.00	1.50	1.00	1.00	1.50	1.50	1.50	1.50	0.94	0.00	244.6	39.0	32.3
36.97	4.67	1.92	0.0	0.70	0.0	0.00	0.00	1.50	1.00	1.00	1.50	1.50	1.50	1.50	0.96	0.00	245.2	39.7	32.7
36.88	4.67	1.92	0.0	0.70	0.0	0.00	0.00	1.50	1.00	1.00	1.50	1.50	1.50	1.50	0.97	0.00	245.8	40.3	33.2
36.79	4.67	1.92	0.0	0.70	0.0	0.00	0.00	1.50	1.00	1.00	1.50	1.50	1.50	1.50	0.98	0.00	246.5	40.9	33.7
36.70	4.67	1.92	0.0	0.70	0.0	0.00	0.00	1.50	1.00	1.00	1.50	1.50	1.50	1.50	0.99	0.00	247.1	41.6	34.2
36.61	4.67	1.92	0.0	0.70	0.0	0.00	0.00	1.50	1.00	1.00	1.50	1.50	1.50	1.50	1.00	0.00	247.7	42.2	34.6
36.52	4.67	1.92	0.0	0.70	0.0	0.00	0.00	1.50	1.00	1.00	1.50	1.50	1.50	1.50	1.01	0.00	248.4	42.9	35.1
36.43	4.67	1.92	0.0	0.70	0.0	0.00	0.00	1.50	1.00	1.00	1.50	1.50	1.50	1.50	1.02	0.00	249.0	43.5	35.6
36.34	4.67	1.92	0.0	0.70	0.0	0.00	0.00	1.50	1.00	1.00	1.50	1.50	1.50	1.50	1.03	0.00	249.6	44.1	36.0
36.25	4.67	1.92	0.0	0.70	0.0	0.00	0.00	1.50	1.00	1.00	1.50	1.50	1.50	1.50	1.04	0.00	250.3	44.8	36.5
36.16	4.67	1.92	0.0	0.70	0.0	0.00	0.00	1.50	1.00	1.00	1.50	1.50	1.50	1.50	1.05	0.00	250.9	45.4	37.0
36.07	4.67	1.92	0.0	0.70	0.0	0.00	0.00	1.50	1.00	1.00	1.50	1.50	1.50	1.50	1.06	0.00	251.5	46.1	37.4
35.98	4.67	1.92	0.0	0.70	0.0	0.00	0.00	1.50	1.00	1.00	1.50	1.50	1.50	1.50	1.07	0.00	252.2	46.7	37.9
35.89	4.67	1.92	0.0	0.70	0.0	0.00	0.00	1.50	1.00	1.00	1.50	1.50	1.50	1.50	1.08	0.00	252.8	47.4	38.4

35.80	4.67	1.92	0.0	0.70	0.0	0.00	0.00	1.50	1.00	1.00	1.50	1.50	1.50	1.50	1.10	0.00	253.4	48.0	38.8
35.71	4.67	1.92	0.0	0.70	0.0	0.00	0.00	1.50	1.00	1.00	1.50	1.50	1.50	1.50	1.11	0.00	254.1	48.6	39.3
35.62	4.67	1.92	0.0	0.70	0.0	0.00	0.00	1.50	1.00	1.00	1.50	1.50	1.50	1.50	1.12	0.00	254.7	49.3	39.8
35.53	4.67	1.92	0.0	0.70	0.0	0.00	0.00	1.50	1.00	1.00	1.50	1.50	1.50	1.50	1.13	0.00	255.3	49.9	40.2
35.44	4.67	1.92	0.0	0.70	0.0	0.00	0.00	1.50	1.00	1.00	1.50	1.50	1.50	1.50	1.14	0.00	255.9	50.6	40.7
35.35	4.67	1.92	0.0	0.70	0.0	0.00	0.00	1.50	1.00	1.00	1.50	1.50	1.50	1.50	1.15	0.00	256.6	51.2	41.2
35.26	4.67	1.92	0.0	0.70	0.0	0.00	0.00	1.50	1.00	1.00	1.50	1.50	1.50	1.50	1.16	0.00	257.2	51.9	41.7
35.17	4.67	1.92	0.0	0.70	0.0	0.00	0.00	1.50	1.00	1.00	1.50	1.50	1.50	1.50	1.17	0.00	257.8	52.5	42.1
35.08	4.67	1.92	0.0	0.70	0.0	0.00	0.00	1.50	1.00	1.00	1.50	1.50	1.50	1.50	1.18	0.00	258.5	53.1	42.6
34.99	4.67	1.92	0.0	0.70	0.0	0.00	0.00	1.50	1.00	1.00	1.50	1.50	1.50	1.50	1.19	0.00	259.1	53.8	43.1
34.90	4.67	1.92	0.0	0.70	0.0	0.00	0.00	1.50	1.00	1.00	1.50	1.50	1.50	1.50	1.20	0.00	259.7	54.4	43.5
34.81	4.67	1.92	0.0	0.70	0.0	0.00	0.00	1.50	1.00	1.00	1.50	1.50	1.50	1.50	1.21	0.00	260.4	55.1	44.0
34.72	4.67	1.92	0.0	0.70	0.0	0.00	0.00	1.50	1.00	1.00	1.50	1.50	1.50	1.50	1.22	0.00	261.0	55.7	44.5
34.63	4.67	1.92	0.0	0.70	0.0	0.00	0.00	1.50	1.00	1.00	1.50	1.50	1.50	1.50	1.23	0.00	261.6	56.3	44.9
34.54	4.67	1.92	0.0	0.70	0.0	0.00	0.00	1.50	1.00	1.00	1.50	1.50	1.50	1.50	1.25	0.00	262.3	57.0	45.4
34.45	4.67	1.92	0.0	0.70	0.0	0.00	0.00	1.50	1.00	1.00	1.50	1.50	1.50	1.50	1.26	0.00	262.9	57.6	45.9
34.36	4.67	1.92	0.0	0.70	0.0	0.00	0.00	1.50	1.00	1.00	1.50	1.50	1.50	1.50	1.27	0.00	263.5	58.3	46.3
34.27	4.67	1.92	0.0	0.70	0.0	0.00	0.00	1.50	1.00	1.00	1.50	1.50	1.50	1.50	1.28	0.00	264.2	58.9	46.8
34.18	4.67	1.92	0.0	0.70	0.0	0.00	0.00	1.50	1.00	1.00	1.50	1.50	1.50	1.50	1.29	0.00	264.8	59.6	47.3
34.09	4.67	1.92	0.0	0.70	0.0	0.00	0.00	1.50	1.00	1.00	1.50	1.50	1.50	1.50	1.30	0.00	265.4	60.2	47.7
34.00	4.67	1.92	0.0	0.70	0.0	0.00	0.00	1.50	1.00	1.00	1.50	1.50	1.50	1.50	1.31	0.00	266.0	60.8	48.2
33.91	4.67	1.92	0.0	0.70	0.0	0.00	0.00	1.50	1.00	1.00	1.50	1.50	1.50	1.50	1.32	0.00	266.7	61.5	48.7
33.82	4.67	1.92	0.0	0.70	0.0	0.00	0.00	1.50	1.00	1.00	1.50	1.50	1.50	1.50	1.33	0.00	267.3	62.1	49.2
33.73	4.67	1.92	0.0	0.70	0.0	0.00	0.00	1.50	1.00	1.00	1.50	1.50	1.50	1.50	1.34	0.00	267.9	62.8	49.6
33.64	4.67	1.92	0.0	0.70	0.0	0.00	0.00	1.50	1.00	1.00	1.50	1.50	1.50	1.50	1.35	0.00	268.6	63.4	50.1
33.55	4.67	1.92	0.0	0.70	0.0	0.00	0.00	1.50	1.00	1.00	1.50	1.50	1.50	1.50	1.36	0.00	269.2	64.1	50.6
33.46	4.67	1.92	0.0	0.70	0.0	0.00	0.00	1.50	1.00	1.00	1.50	1.50	1.50	1.50	1.37	0.00	269.8	64.7	51.0
33.37	4.67	1.92	0.0	0.70	0.0	0.00	0.00	1.50	1.00	1.00	1.50	1.50	1.50	1.50	1.39	0.00	270.5	65.3	51.5
33.28	4.67	1.92	0.0	0.70	0.0	0.00	0.00	1.50	1.00	1.00	1.50	1.50	1.50	1.50	1.40	0.00	271.1	66.0	52.0
33.19	4.67	1.92	0.0	0.70	0.0	0.00	0.00	1.50	1.00	1.00	1.50	1.50	1.50	1.50	1.41	0.00	271.7	66.6	52.4
33.10	4.67	1.92	0.0	0.70	0.0	0.00	0.00	1.50	1.00	1.00	1.50	1.50	1.50	1.50	1.42	0.00	272.4	67.3	52.9
33.01	4.67	1.92	0.0	0.70	0.0	0.00	0.00	1.50	1.00	1.00	1.50	1.50	1.50	1.50	1.43	0.00	273.0	67.9	53.4
32.92	4.67	1.92	0.0	0.70	0.0	0.00	0.00	1.50	1.00	1.00	1.50	1.50	1.50	1.50	1.44	0.00	273.6	68.5	53.8
32.83	4.67	1.92	0.0	0.70	0.0	0.00	0.00	1.50	1.00	1.00	1.50	1.50	1.50	1.50	1.45	0.00	274.3	69.2	54.3
32.74	4.67	1.92	0.0	0.70	0.0	0.00	0.00	1.50	1.00	1.00	1.50	1.50	1.50	1.50	1.46	0.00	274.9	69.8	54.8
32.65	4.67	1.92	0.0	0.70	0.0	0.00	0.00	1.50	1.00	1.00	1.50	1.50	1.50	1.50	1.47	0.00	275.5	70.5	55.2
32.56	4.67	1.92	0.0	0.70	0.0	0.00	0.00	1.50	1.00	1.00	1.50	1.50	1.50	1.50	1.48	0.00	276.1	71.1	55.7
32.46	4.67	1.92	0.0	0.70	0.0	0.00	0.00	1.50	1.00	1.00	1.50	1.50	1.50	1.50	1.49	0.00	276.8	71.8	56.2
32.37	4.67	1.92	0.0	0.70	0.0	0.00	0.00	1.50	1.00	1.00	1.50	1.50	1.50	1.50	1.50	0.00	277.4	72.4	56.7
32.28	4.67	1.92	0.0	0.70	0.0	0.00	0.00	1.50	1.00	1.00	1.50	1.50	1.50	1.50	1.51	0.00	278.0	73.0	57.1
32.19	4.67	1.92	0.0	0.70	0.0	0.00	0.00	1.50	1.00	1.00	1.50	1.50	1.50	1.50	1.52	0.00	278.7	73.7	57.6
32.10	4.67	1.92	0.0	0.70	0.0	0.00	0.00	1.50	1.00	1.00	1.50	1.50	1.50	1.50	1.54	0.00	279.3	74.3	58.1
32.01	4.67	1.92	0.0	0.70	0.0	0.00	0.00	1.50	1.00	1.00	1.50	1.50	1.50	1.50	1.55	0.00	279.9	75.0	58.5
31.92	4.67	1.92	35.0	0.70	24.5	1.14	0.70	0.00	1.00	1.00	0.00	0.00	1.14	0.70	1.56	0.00	280.4	75.3	58.8
31.83	4.67	1.92	35.0	0.70	24.5	1.14	0.70	0.00	1.00	1.00	0.00	0.00	1.14	0.70	1.57	0.00	280.9	75.6	59.1
31.74	4.67	1.92	35.0	0.70	24.5	1.14	0.70	0.00	1.00	1.00	0.00	0.00	1.14	0.70	1.58	0.00	281.4	75.9	59.4
31.65	4.67	1.92	35.0	0.70	24.5	1.14	0.70	0.00	1.00	1.00	0.00	0.00	1.14	0.70	1.59	0.00	281.8	76.2	59.7
31.56	4.67	1.92	35.0	0.70	24.5	1.14	0.70	0.00	1.00	1.00	0.00	0.00	1.14	0.70	1.60	0.00	282.3	76.5	60.0
31.47	4.67	1.92	35.0	0.70	24.5	1.14	0.70	0.00	1.00	1.00	0.00	0.00	1.14	0.70	1.61	0.00	282.8	76.8	60.3
31.38	4.67	1.92	35.0	0.70	24.5	1.14	0.70	0.00	1.00	1.00	0.00	0.00	1.14	0.70	1.62	0.00	283.3	77.1	60.5
31.29	4.67	1.92	35.0	0.70	24.5	1.14	0.70	0.00	1.00	1.00	0.00	0.00	1.14	0.70	1.63	0.00	283.8	77.4	60.8
31.20	4.67	1.92	35.0	0.70	24.5	1.14	0.70	0.00	1.00	1.00	0.00	0.00	1.14	0.70	1.64	0.00	284.2	77.7	61.1
31.11	4.67	1.92	35.0	0.70	24.5	1.14	0.70	0.00	1.00	1.00	0.00	0.00	1.14	0.70	1.65	0.00	284.7	78.0	61.4
31.02	4.67	1.92	35.0	0.70	24.5	1.14	0.70	0.00	1.00	1.00	0.00	0.00	1.14	0.70	1.66	0.00	285.2	78.3	61.7
30.93	4.67	1.92	35.0	0.70	24.5	1.14	0.70	0.00	1.00	1.00	0.00	0.00	1.14	0.70	1.68	0.00	285.7	78.6	62.0
30.84	4.67	1.92	35.0	0.70	24.5	1.14	0.70	0.00	1.00	1.00	0.00	0.00	1.14	0.70	1.69	0.00	286.1	78.9	62.3
30.75	4.67	1.92	35.0	0.70	24.5	1.14	0.70	0.00	1.00	1.00	0.00	0.00	1.14	0.70	1.70	0.00	286.6	79.2	62.5
30.66	4.67	1.92	35.0	0.70	24.5	1.14	0.70	0.00	1.00	1.00	0.00	0.00	1.14	0.70	1.71	0.00	287.1	79.5	62.8
30.57	4.67	1.92	35.0	0.70	24.5	1.14	0.70	0.00	1.00	1.00	0.00	0.00	1.14	0.70	1.72	0.00	287.6	79.8	63.1
30.48	4.67	1.92	35.0	0.70	24.5	1.14	0.70	0.00	1.00	1.00	0.00	0.00	1.14	0.70	1.73	0.00	288.1	80.1	63.4
30.39	4.67	1.92	35.0	0.70	24.5	1.14	0.70	0.00	1.00	1.00	0.00	0.00	1.14	0.70	1.74	0.00	288.5	80.5	63.7
30.30	4.67	1.92	35.0	0.70	24.5	1.14	0.70	0.00	1.00	1.00	0.00	0.00	1.14	0.70	1.75	0.00	289.0	80.8	64.0
30.21	4.67	1.92	35.0	0.70	24.5	1.14	0.70	0.00	1.00	1.00	0.00	0.00	1.14	0.70	1.76	0.00	289.5	81.1	64.3
30.12	4.67	1.92	35.0	0.70	24.5	1.14	0.70	0.00	1.00	1.00	0.00	0.00	1.14	0.70	1.77	0.00	290.0	81.4	64.6
30.03	4.67	1.92	35.0	0.70	24.5	1.14	0.70	0.00	1.00	1.00	0.00	0.00	1.14	0.70	1.78	0.00	290.5	81.7	64.8
29.94	4.67	1.92	35.0	0.70	24.5	1.14	0.70	0.00	1.00	1.00	0.00	0.00	1.14	0.70	1.79	0.00	290.9	82.0	65.1
29.85	4.67	1.92	35.0	0.70	24.5	1.14	0.70	0.00	1.00	1.00	0.00	0.00	1.14	0.70	1.80	0.00	291.4	82.3	65.4
29.76	4.67	1.92	35.0	0.70	24.5	1.14	0.70	0.00	1.00	1.00	0.00	0.00	1.14	0.70	1.81	0.00	291.9	82.6	65.7
29.67	4.67	1.92	35.0	0.70	24.5	1.14	0.70	0.00	1.00	1.00	0.00	0.00	1.14	0.70	1.83	0.00	292.4	82.9	66.0
29.58	4.67	1.92	35.0	0.70	24.5	1.14	0.70	0.00	1.00	1.00	0.00	0.00	1.14	0.70	1.84	0.00	292.8	83.2	66.3
29.49	4.67	1.92	35.0	0.70	24.5	1.14	0.70	0.00	1.00	1.00	0.00	0.00	1.14	0.70	1.85	0.00	293.3	83.5	66.6
29.40	4.67	1.92	35.0	0.70	24.5	1.14	0.70	0.00	1.00	1.00	0.00	0.00	1.14	0.70	1.86	0.00	293.8	83.8	66.8
29.31	4.67	1.92	35.0	0.70	24.5	1.14	0.70	0.00	1.00	1.00	0.00	0.00	1.14	0.70	1.87	0.00	294.3	84.1	67.1
29.22	4.67	1.92	35.0	0.70	24.5	1.14	0.70	0.00	1.00	1.00	0.00	0.00	1.14	0.70	1.88	0.00	294.8	84.4	67.4
29.13	4.67	1.92	35.0	0.70	24.5	1.14	0.70	0.00	1.00	1.00	0.00	0.00	1.14	0.70	1.89	0.00	295.2	84.7	67.7
29.04	4.67	1.92	35.0	0.70	24.5	1.14	0.70	0.00	1.00	1.00	0.00	0.00	1.14	0.70	1.90	0.00	295.7	85.0	68.0
28.95	4.67	1.92	35.0	0.70	24.5	1.14	0.70	0.00	1.00	1.00	0.00	0.00	1.14	0.70	1.91	0.00	296.2	85.3	68.3
28.86	4.67	1.92	35.0	0.70	24.5	1.14	0.70	0.00	1.00	1.00	0.00	0.00	1.14	0.70	1.92	0.00	296.7	85.6	68.6
28.77	4.67	1.92	35.0	0.70	24.5	1.14	0.70	0.00	1.00	1.00	0.00	0.00	1.14	0.70	1.93	0.00	297.1	85.9	68.9
28.68	4.67	1.92	35.0	0.70	24.5	1.14	0.70	0.00	1.00	1.00	0.00	0.00	1.14	0.70	1.94	0.00	297.6	86.2	69.1
28.59	4.67	1.92	35.0	0.70	24.5	1.14	0.70	0.00	1.00	1.00	0.00	0.00	1.14	0.70	1.95	0.00	298.1	86.6	69.4
28.50	4.67	1.92	35.0	0.70	24.5	1.14	0.70	0.00	1.00	1.00	0.00	0.00	1.14	0.70	1.96	0.00	298.6	86.9	69.7
28.41	4.67	1.92	35.0	0.70	24.5	1.14	0.70	0.00	1.00	1.00	0.00	0.00	1.14	0.70	1.98	0.00	299.1	87.2	70.0
28.32	4.67	1.92	35.0	0.70	24.5	1.14	0.70	0.00	1.00	1.00	0.00	0.00	1.14	0.70	1.99	0.00	299.5	87.5	70.3
28.23	4.67	1.92	35.0	0.70	24.5	1.14	0.70	0.00	1.00	1.00	0.00	0.00	1.14	0.70	2.00	0.00	300.0	87.8	70.6
28.14	4.67	1.92	35.0	0.70	24.5	1.14	0.70	0.00	1.00	1.00	0.00	0.00	1.14	0.70	2.01	0.00	300.5	88.1	70.9
28.05	4.67	1.92	35.0	0.70	24.5	1.14	0.70	0.00	1.00	1.00	0.00	0.00	1.14	0.70	2.02	0.00	301.0	88.4	71.1
27.96	4.67	1.92	35.0	0.70	24.5	1.14	0.70	0.00	1.00	1.00	0.00	0.00	1.14	0.70	2.03	0.00	301.4	88.7	71.4
27.87	4.67	1.92	35.0	0.70	24.5	1.14	0.70	0.00	1.00	1.00	0.00	0.00	1.14	0.70	2.04	0.00	301.9	89.0	71.7
27.78	4.67	1.92	35.0	0.70	24.5	1.14	0.70	0.00	1.00	1.00	0.00	0.00	1.14	0.70	2.05	0.00	302.4	89.3	72.0
27.69	4.67	1.92	35.0	0.70	24.5	1.14	0.70	0.00	1.00	1.00	0.00	0.00	1.14	0.70	2.06	0.00	302.9	89.6	72.3
27.60	4.67	1.92	35.0	0.70	24.5	1.14	0.70	0.00	1.00	1.00	0.00	0.00	1.14	0.70	2.07	0.00	303.4	89.9	72.6
27.51	4.67	1.92	35.0	0.70	24.5	1.14	0.70	0.00	1.00	1.00	0.00	0.00	1.14	0.70	2.08	0.00	303.8	90.2	72.9
27.41	4.67	1.92	35.0	0.70	24.5	1.14	0.70	0.00	1.00	1.00	0.00	0.00	1.14	0.70	2.09	0.00	304.3	90.5	73.2
27.32	4.67	1.92	35.0	0.70	24.5	1.14	0.70	0.00	1.00	1.00	0.00	0.00	1.14	0.70	2.10	0.00	304.8	90.8	73.4
27.23	4.67	1.92	35.0	0.70	24.5	1.14	0.70	0.00	1.00	1.00	0.00	0.00	1.14	0.70	2.12	0.00	305.3	91.1	73.7
27.14	4.67	1.92	35.0	0.70	24.5	1.14	0.70	0.00	1.00	1.00	0.00	0.00	1.14	0.70	2.13	0.00	305.7	91.4	74.0
27.05	4.67	1.92	35.0	0.70	24.5	1.14	0.70	0.00	1.00	1.00	0.00	0.00	1.14	0.70	2.14	0.00	306.2	91.7	74.3
26.96	4.67	1.92	32.0	0.70	22.4	1.03	0.63	0.50	1.00	1.00	0.50	0.50	1.53	1.13	2.15	0.00	306.9	92.2	74.7
26.87	4.67	1.92	32.0	0.70	22.4	1.03	0.63	0.50	1.00	1.00	0.50	0.50	1.53	1.13	2.16	0.00	307.5	92.7	75.1
26.78	4.67	1.92	32.0	0.70	22.4	1.03	0.63	0.50	1.00	1.00	0.50	0.50	1.53	1.13	2.17	0.00	308.2	93.2	75.5
26.69	4.67	1.92	32.0	0.70	22.4	1.03	0.63	0.50	1.00	1.00	0.50	0.50	1.53	1.13	2.18	0.00	308.8	93.7	76.0
26.60	4.67	1.92	32.0	0.70	22.4	1.03	0.63	0.50	1.00	1.00	0.50	0.50	1.53	1.13	2.19	0.00	309.4	94.2	76.4
26.51	4.67	1.92	32.0	0.70	22.4	1.03	0.63	0.50	1.00	1.00	0.50	0.50	1.53	1.13	2.20	0.00	310.1	94.7	76.8
26.42	4.67	1.92	32.0	0.70	22.4	1.03	0.63	0.50	1.00	1.00	0.50	0.50	1.53	1.13	2.21	0.00	310.7	95.1	77.2
26.33	4.67	1.92	32.0	0.70	22.4	1.03	0.63	0.50	1.00	1.00	0.50	0.50	1.53	1.13	2.22	0.00	311.4	95.6	77.6
26.24	4.67	1.92	32.0	0.70	22.4	1.03	0.63	0.50	1.00	1.00	0.50	0.50	1.53	1.13	2.23	0.00	312.0	96.1	78.0
26.15	4.67	1.92	32.0	0.70	22.4	1.03	0.63	0.50	1.00	1.00	0.50	0.50	1.53	1.13	2.24	0.00	312.7	96.6	78.5
26.06	4.67	1.92	32.0	0.70	22.4	1.03	0.63	0.50	1.00	1.00	0.50	0.50	1.53	1.13	2.25	0.00	313.3	97.1	78.9
25.97	4.67	1.92	32.0	0.70	22.4	1.03	0.63	0.50	1.00	1.00	0.50	0.50	1.53	1.13	2.27	0.00	313.9	97.6	79.3
25.88	4.67	1.92	32.0	0.70	22.4	1.03	0.63	0.50	1.00	1.00	0.50	0.50	1.53	1.13	2.28	0.00	314.6	98.1	79.7
25.79	4.67	1.92	32.0	0.70	22.4	1.03	0.63	0.50	1.00	1.00	0.50	0.50	1.53	1.13	2.29	0.00	315.2	98.6	80.1
25.70	4.67	1.92	32.0	0.70	22.4	1.03	0.63	0.50	1.00	1.00	0.50	0.50	1.53	1.13	2.30	0.00	315.9	99.0	80.5
25.61	4.67	1.92	32.0	0.70	22.4	1.03	0.63	0.50	1.00	1.00	0.50	0.50	1.53	1.13	2.31	0.00	316.5	99.5	81.0
25.52	4.67	1.92	32.0	0.70	22.4	1.03	0.63	0.50	1.00	1.00	0.50	0.50	1.53	1.13	2.32	0.00	317.2	100.0	81.4
25.43	4.67	1.92	32.0	0.70	22.4	1.03	0.63	0.50	1.00	1.00	0.50	0.50	1.53	1.13	2.33	0.00	317.8	100.5	81.8
25.34	4.67	1.92	32.0	0.70	22.4	1.03	0.63	0.50	1.00	1.00	0.50	0.50	1.53	1.13	2.34	0.00	318.4	101.0	82.2

25.25	4.67	1.92	32.0	0.70	22.4	1.03	0.63	0.50	1.00	1.00	0.50	0.50	1.53	1.13	2.35	0.00	319.1	101.5	82.6
25.16	4.67	1.92	32.0	0.70	22.4	1.03	0.63	0.50	1.00	1.00	0.50	0.50	1.53	1.13	2.36	0.00	319.7	102.0	83.0
25.07	4.67	1.92	32.0	0.70	22.4	1.03	0.63	0.50	1.00	1.00	0.50	0.50	1.53	1.13	2.37	0.00	320.4	102.5	83.4
24.98	4.67	1.92	32.0	0.70	22.4	1.03	0.63	0.50	1.00	1.00	0.50	0.50	1.53	1.13	2.38	0.00	321.0	102.9	83.9
24.89	4.67	1.92	32.0	0.70	22.4	1.03	0.63	0.50	1.00	1.00	0.50	0.50	1.53	1.13	2.39	0.00	321.6	103.4	84.3
24.80	4.67	1.92	32.0	0.70	22.4	1.03	0.63	0.50	1.00	1.00	0.50	0.50	1.53	1.13	2.41	0.00	322.3	103.9	84.7
24.71	4.67	1.92	32.0	0.70	22.4	1.03	0.63	0.50	1.00	1.00	0.50	0.50	1.53	1.13	2.42	0.00	322.9	104.4	85.1
24.62	4.67	1.92	32.0	0.70	22.4	1.03	0.63	0.50	1.00	1.00	0.50	0.50	1.53	1.13	2.43	0.00	323.6	104.9	85.5
24.53	4.67	1.92	32.0	0.70	22.4	1.03	0.63	0.50	1.00	1.00	0.50	0.50	1.53	1.13	2.44	0.00	324.2	105.4	85.9
24.44	4.67	1.92	32.0	0.70	22.4	1.03	0.63	0.50	1.00	1.00	0.50	0.50	1.53	1.13	2.45	0.00	324.9	105.9	86.4
24.35	4.67	1.92	32.0	0.70	22.4	1.03	0.63	0.50	1.00	1.00	0.50	0.50	1.53	1.13	2.46	0.00	325.5	106.3	86.8
24.26	4.67	1.92	32.0	0.70	22.4	1.03	0.63	0.50	1.00	1.00	0.50	0.50	1.53	1.13	2.47	0.00	326.1	106.8	87.2
24.17	4.67	1.92	32.0	0.70	22.4	1.03	0.63	0.50	1.00	1.00	0.50	0.50	1.53	1.13	2.48	0.00	326.8	107.3	87.6
24.08	4.67	1.92	32.0	0.70	22.4	1.03	0.63	0.50	1.00	1.00	0.50	0.50	1.53	1.13	2.49	0.00	327.4	107.8	88.0
23.99	4.67	1.92	32.0	0.70	22.4	1.03	0.63	0.50	1.00	1.00	0.50	0.50	1.53	1.13	2.50	0.00	328.1	108.3	88.4
23.90	4.67	1.92	32.0	0.70	22.4	1.03	0.63	0.50	1.00	1.00	0.50	0.50	1.53	1.13	2.51	0.00	328.7	108.8	88.8
23.81	4.67	1.92	32.0	0.70	22.4	1.03	0.63	0.50	1.00	1.00	0.50	0.50	1.53	1.13	2.52	0.00	329.4	109.3	89.3
23.72	4.67	1.92	32.0	0.70	22.4	1.03	0.63	0.50	1.00	1.00	0.50	0.50	1.53	1.13	2.53	0.00	330.0	109.8	89.7
23.63	4.67	1.92	32.0	0.70	22.4	1.03	0.63	0.50	1.00	1.00	0.50	0.50	1.53	1.13	2.54	0.00	330.6	110.2	90.1
23.54	4.67	1.92	32.0	0.70	22.4	1.03	0.63	0.50	1.00	1.00	0.50	0.50	1.53	1.13	2.56	0.00	331.3	110.7	90.5
23.45	4.67	1.92	32.0	0.70	22.4	1.03	0.63	0.50	1.00	1.00	0.50	0.50	1.53	1.13	2.57	0.00	331.9	111.2	90.9
23.36	4.67	1.92	32.0	0.70	22.4	1.03	0.63	0.50	1.00	1.00	0.50	0.50	1.53	1.13	2.58	0.00	332.6	111.7	91.3
23.27	4.67	1.92	32.0	0.70	22.4	1.03	0.63	0.50	1.00	1.00	0.50	0.50	1.53	1.13	2.59	0.00	333.2	112.2	91.8
23.18	4.67	1.91	32.0	0.70	22.4	1.02	0.63	0.50	1.00	1.00	0.50	0.50	1.52	1.13	2.60	0.00	333.9	112.7	92.2
23.09	4.67	1.90	32.0	0.70	22.4	1.02	0.63	0.50	1.00	1.00	0.50	0.50	1.52	1.13	2.61	0.00	334.5	113.2	92.6
23.00	4.67	1.90	32.0	0.70	22.4	1.02	0.63	0.50	1.00	1.00	0.50	0.50	1.52	1.13	2.62	0.00	335.1	113.7	93.0
22.91	4.67	1.89	32.0	0.70	22.4	1.01	0.62	0.50	1.00	1.00	0.50	0.50	1.51	1.12	2.63	0.00	335.8	114.1	93.4
22.82	4.67	1.89	32.0	0.70	22.4	1.01	0.62	0.50	1.00	1.00	0.50	0.50	1.51	1.12	2.64	0.00	336.4	114.6	93.8
22.73	4.67	1.88	32.0	0.70	22.4	1.01	0.62	0.50	1.00	1.00	0.50	0.50	1.51	1.12	2.65	0.00	337.0	115.1	94.2
22.64	4.67	1.87	32.0	0.70	22.4	1.00	0.62	0.50	1.00	1.00	0.50	0.50	1.50	1.12	2.66	0.00	337.7	115.6	94.6
22.55	4.67	1.87	32.0	0.70	22.4	1.00	0.62	0.50	1.00	1.00	0.50	0.50	1.50	1.12	2.67	0.00	338.3	116.1	95.1
22.45	4.67	1.86	32.0	0.70	22.4	1.00	0.61	0.50	1.00	1.00	0.50	0.50	1.50	1.11	2.68	0.00	338.9	116.5	95.5
22.36	4.67	1.85	32.0	0.70	22.4	0.99	0.61	0.50	1.00	1.00	0.50	0.50	1.49	1.11	2.70	0.00	339.6	117.0	95.9
22.27	4.67	1.85	32.0	0.70	22.4	0.99	0.61	0.50	1.00	1.00	0.50	0.50	1.49	1.11	2.71	0.00	340.2	117.5	96.3
22.18	4.67	1.84	32.0	0.70	22.4	0.99	0.61	0.50	1.00	1.00	0.50	0.50	1.49	1.11	2.72	0.00	340.8	118.0	96.7
22.09	4.67	1.83	32.0	0.70	22.4	0.98	0.60	0.50	1.00	1.00	0.50	0.50	1.48	1.10	2.73	0.00	341.4	118.4	97.1
22.00	4.67	1.83	32.0	0.70	22.4	0.98	0.60	0.50	1.00	1.00	0.50	0.50	1.48	1.10	2.74	0.00	342.1	118.9	97.5
21.91	4.67	1.82	32.0	0.70	22.4	0.98	0.60	0.00	1.00	1.00	0.00	0.00	0.98	0.60	2.75	0.00	342.5	119.2	97.7
21.82	4.67	1.82	32.0	0.70	22.4	0.97	0.60	0.00	1.00	1.00	0.00	0.00	0.97	0.60	2.76	0.00	342.9	119.4	98.0
21.73	4.67	1.81	32.0	0.70	22.4	0.97	0.60	0.00	1.00	1.00	0.00	0.00	0.97	0.60	2.77	0.00	343.3	119.7	98.2
21.64	4.67	1.81	32.0	0.70	22.4	0.97	0.60	0.00	1.00	1.00	0.00	0.00	0.97	0.60	2.78	0.00	343.7	120.0	98.5
21.55	4.67	1.80	32.0	0.70	22.4	0.97	0.59	0.00	1.00	1.00	0.00	0.00	0.97	0.59	2.79	0.00	344.1	120.2	98.7
21.46	4.67	1.80	32.0	0.70	22.4	0.96	0.59	0.00	1.00	1.00	0.00	0.00	0.96	0.59	2.80	0.00	344.5	120.5	99.0
21.37	4.67	1.79	32.0	0.70	22.4	0.96	0.59	0.00	1.00	1.00	0.00	0.00	0.96	0.59	2.81	0.00	344.9	120.8	99.2
21.28	4.67	1.79	32.0	0.70	22.4	0.96	0.59	0.00	1.00	1.00	0.00	0.00	0.96	0.59	2.82	0.00	345.3	121.0	99.4
21.19	4.67	1.78	32.0	0.70	22.4	0.95	0.59	0.00	1.00	1.00	0.00	0.00	0.95	0.59	2.83	0.00	345.7	121.3	99.7
21.10	4.67	1.78	32.0	0.70	22.4	0.95	0.59	0.00	1.00	1.00	0.00	0.00	0.95	0.59	2.85	0.00	346.1	121.5	99.9
21.01	4.67	1.77	32.0	0.70	22.4	0.95	0.58	0.00	1.00	1.00	0.00	0.00	0.95	0.58	2.86	0.00	346.5	121.8	100.2
20.92	4.67	1.77	32.0	0.70	22.4	0.95	0.58	0.00	1.00	1.00	0.00	0.00	0.95	0.58	2.87	0.00	346.9	122.0	100.4
20.83	4.67	1.76	32.0	0.70	22.4	0.94	0.58	0.00	1.00	1.00	0.00	0.00	0.94	0.58	2.88	0.00	347.3	122.3	100.6
20.74	4.67	1.76	32.0	0.70	22.4	0.94	0.58	0.00	1.00	1.00	0.00	0.00	0.94	0.58	2.89	0.00	347.7	122.6	100.9
20.65	4.67	1.75	32.0	0.70	22.4	0.94	0.58	0.00	1.00	1.00	0.00	0.00	0.94	0.58	2.90	0.00	348.1	122.8	101.1
20.56	4.67	1.75	32.0	0.70	22.4	0.94	0.58	0.00	1.00	1.00	0.00	0.00	0.94	0.58	2.91	0.00	348.5	123.1	101.3
20.47	4.67	1.74	32.0	0.70	22.4	0.93	0.57	0.00	1.00	1.00	0.00	0.00	0.93	0.57	2.92	0.00	348.9	123.3	101.6
20.38	4.67	1.74	32.0	0.70	22.4	0.93	0.57	0.00	1.00	1.00	0.00	0.00	0.93	0.57	2.93	0.00	349.3	123.6	101.8
20.29	4.67	1.73	32.0	0.70	22.4	0.93	0.57	0.00	1.00	1.00	0.00	0.00	0.93	0.57	2.94	0.00	349.7	123.8	102.1
20.20	4.67	1.73	32.0	0.70	22.4	0.92	0.57	0.00	1.00	1.00	0.00	0.00	0.92	0.57	2.95	0.00	350.1	124.1	102.3
20.11	4.67	1.72	32.0	0.70	22.4	0.92	0.57	0.00	1.00	1.00	0.00	0.00	0.92	0.57	2.96	0.00	350.5	124.3	102.5
20.02	4.67	1.72	32.0	0.70	22.4	0.92	0.57	0.00	1.00	1.00	0.00	0.00	0.92	0.57	2.97	0.00	350.8	124.6	102.8
19.93	4.67	1.71	32.0	0.70	22.4	0.92	0.56	0.00	1.00	1.00	0.00	0.00	0.92	0.56	2.99	0.00	351.2	124.8	103.0
19.84	4.67	1.71	32.0	0.70	22.4	0.91	0.56	0.00	1.00	1.00	0.00	0.00	0.91	0.56	3.00	0.00	351.6	125.1	103.2
19.75	4.67	1.70	32.0	0.70	22.4	0.91	0.56	0.00	1.00	1.00	0.00	0.00	0.91	0.56	3.01	0.00	352.0	125.3	103.4
19.66	4.67	1.69	32.0	0.70	22.4	0.91	0.56	0.00	1.00	1.00	0.00	0.00	0.91	0.56	3.02	0.00	352.4	125.5	103.7
19.57	4.67	1.69	32.0	0.70	22.4	0.91	0.56	0.00	1.00	1.00	0.00	0.00	0.91	0.56	3.03	0.00	352.8	125.8	103.9
19.48	4.67	1.69	32.0	0.70	22.4	-0.90	0.56	0.00	1.00	1.00	0.00	0.00	-0.90	0.56	3.04	-0.38	352.4	126.0	103.8
19.39	4.67	1.68	32.0	0.70	22.4	-0.90	0.55	0.00	1.00	1.00	0.00	0.00	-0.90	0.55	3.05	-0.76	352.0	126.3	103.8
19.30	4.67	1.68	32.0	0.70	22.4	-0.90	0.55	0.00	1.00	1.00	0.00	0.00	-0.90	0.55	3.06	-1.14	351.6	126.5	103.7
19.21	4.67	1.67	32.0	0.70	22.4	-0.90	0.55	0.00	1.00	1.00	0.00	0.00	-0.90	0.55	3.07	-1.51	351.2	126.8	103.7
19.12	4.67	1.67	32.0	0.70	22.4	-0.89	0.55	0.00	1.00	1.00	0.00	0.00	-0.89	0.55	3.08	-1.89	350.9	127.0	103.6
19.03	4.67	1.66	32.0	0.70	22.4	-0.89	0.55	0.00	1.00	1.00	0.00	0.00	-0.89	0.55	3.09	-2.26	350.5	127.3	103.6
18.94	4.67	1.66	32.0	0.70	22.4	-0.89	0.55	0.00	1.00	1.00	0.00	0.00	-0.89	0.55	3.10	-2.64	350.1	127.5	103.5
18.85	4.67	1.65	32.0	0.70	22.4	-0.89	0.54	0.00	1.00	1.00	0.00	0.00	-0.89	0.54	3.11	-3.01	349.7	127.7	103.5
18.76	4.67	1.65	32.0	0.70	22.4	-0.88	0.54	0.00	1.00	1.00	0.00	0.00	-0.88	0.54	3.12	-3.38	349.4	128.0	103.4
18.67	4.67	1.64	32.0	0.70	22.4	-0.88	0.54	0.00	1.00	1.00	0.00	0.00	-0.88	0.54	3.14	-3.75	349.0	128.2	103.4
18.58	4.67	1.64	32.0	0.70	22.4	-0.88	0.54	0.00	1.00	1.00	0.00	0.00	-0.88	0.54	3.15	-4.12	348.6	128.4	103.3
18.49	4.67	1.63	32.0	0.70	22.4	-0.87	0.54	0.00	1.00	1.00	0.00	0.00	-0.87	0.54	3.16	-4.49	348.3	128.7	103.3
18.40	4.67	1.63	32.0	0.70	22.4	-0.87	0.54	0.00	1.00	1.00	0.00	0.00	-0.87	0.54	3.17	-4.86	347.9	128.9	103.2
18.31	4.67	1.62	32.0	0.70	22.4	-0.87	0.54	0.00	1.00	1.00	0.00	0.00	-0.87	0.54	3.18	-5.22	347.5	129.2	103.2
18.22	4.67	1.62	32.0	0.70	22.4	-0.87	0.53	0.00	1.00	1.00	0.00	0.00	-0.87	0.53	3.19	-5.59	347.2	129.4	103.1
18.13	4.67	1.61	32.0	0.70	22.4	-0.86	0.53	0.00	1.00	1.00	0.00	0.00	-0.86	0.53	3.20	-5.95	346.8	129.6	103.1
18.04	4.67	1.61	32.0	0.70	22.4	-0.86	0.53	0.00	1.00	1.00	0.00	0.00	-0.86	0.53	3.21	-6.31	346.4	129.9	103.0
17.95	4.67	1.60	32.0	0.70	22.4	-0.86	0.53	0.00	1.00	1.00	0.00	0.00	-0.86	0.53	3.22	-6.68	346.1	130.1	102.9
17.86	4.67	1.60	32.0	0.70	22.4	-0.86	0.53	0.00	1.00	1.00	0.00	0.00	-0.86	0.53	3.23	-7.04	345.7	130.3	102.9
17.77	4.67	1.59	32.0	0.70	22.4	-0.85	0.53	0.00	1.00	1.00	0.00	0.00	-0.85	0.53	3.24	-7.40	345.4	130.6	102.8
17.68	4.67	1.59	32.0	0.70	22.4	-0.85	0.52	0.00	1.00	1.00	0.00	0.00	-0.85	0.52	3.25	-7.76	345.0	130.8	102.8
17.59	4.67	1.59	32.0	0.70	22.4	-0.85	0.52	0.00	1.00	1.00	0.00	0.00	-0.85	0.52	3.26	-8.11	344.6	131.0	102.7
17.49	4.67	1.58	32.0	0.70	22.4	-0.85	0.52	0.00	1.00	1.00	0.00	0.00	-0.85	0.52	3.27	-8.47	344.3	131.3	102.7
17.40	4.67	1.58	32.0	0.70	22.4	-0.84	0.52	0.00	1.00	1.00	0.00	0.00	-0.84	0.52	3.29	-8.82	343.9	131.5	102.6
17.31	4.67	1.57	32.0	0.70	22.4	-0.84	0.52	0.00	1.00	1.00	0.00	0.00	-0.84	0.52	3.30	-9.18	343.6	131.7	102.6
17.22	4.67	1.57	32.0	0.70	22.4	-0.84	0.52	0.00	1.00	1.00	0.00	0.00	-0.84	0.52	3.31	-9.53	343.2	131.9	102.5
17.13	4.67	1.56	32.0	0.70	22.4	-0.84	0.51	0.00	1.00	1.00	0.00	0.00	-0.84	0.51	3.32	-9.88	342.9	132.2	102.5
17.04	4.67	1.56	32.0	0.70	22.4	-0.83	0.51	0.00	1.00	1.00	0.00	0.00	-0.83	0.51	3.33	-10.24	342.5	132.4	102.4
16.95	4.67	1.55	32.0	0.70	22.4	-0.83	0.51	0.00	1.00	1.00	0.00	0.00	-0.83	0.51	3.34	-10.59	342.2	132.6	102.4
16.86	4.67	1.55	32.0	0.70	22.4	-0.83	0.51	0.00	1.00	1.00	0.00	0.00	-0.83	0.51	3.35	-10.93	341.8	132.8	102.3
16.77	4.67	1.54	32.0	0.70	22.4	-0.83	0.51	0.00	1.00	1.00	0.00	0.00	-0.83	0.51	3.36	-11.28	341.5	133.1	102.3
16.68	4.67	1.54	32.0	0.70	22.4	-0.82	0.51	0.00	1.00	1.00	0.00	0.00	-0.82	0.51	3.37	-11.63	341.1	133.3	102.2
16.59	4.67	1.53	32.0	0.70	22.4	-0.82	0.51	0.00	1.00	1.00	0.00	0.00	-0.82	0.51	3.38	-11.97	340.8	133.5	102.2
16.50	4.67	1.53	32.0	0.70	22.4	-0.82	0.50	0.00	1.00	1.00	0.00	0.00	-0.82	0.50	3.39	-12.32	340.4	133.7	102.1
16.41	4.67	1.52	32.0	0.70	22.4	-0.82	0.50	0.00	1.00	1.00	0.00	0.00	-0.82	0.50	3.40	-12.66	340.1	134.0	102.1
16.32	4.67	1.52	32.0	0.70	22.4	-0.81	0.50	0.00	1.00	1.00	0.00	0.00	-0.81	0.50	3.41	-13.01	339.8	134.2	102.0
16.23	4.67	1.51	32.0	0.70	22.4	-0.81	0.50	0.00	1.00	1.00	0.00	0.00	-0.81	0.50	3.43	-13.35	339.4	134.4	102.0
16.14	4.67	1.51	32.0	0.70	22.4	-0.81	0.50	0.00	1.00	1.00	0.00	0.00	-0.81	0.50	3.44	-13.69	339.1	134.6	101.9
16.05	4.67	1.50	32.0	0.70	22.4	-0.81	0.50	0.00	1.00	1.00	0.00	0.00	-0.81	0.50	3.45	-14.03	338.7	134.8	101.9
15.96	4.67	1.50	32.0	0.70	22.4	-0.80	0.49	0.00	1.00	1.00	0.00	0.00	-0.80	0.49	3.46	-14.37	338.4	135.1	101.8
15.87	4.67	1.50	32.0	0.70	22.4	-0.80	0.49	0.00	1.00	1.00	0.00	0.00	-0.80	0.49	3.47	-14.70	338.1	135.3	101.8
15.78	4.67	1.49	32.0	0.70	22.4	-0.80	0.49	0.00	1.00	1.00	0.00	0.00	-0.80	0.49	3.48	-15.04	337.7	135.5	101.8
15.69	4.67	1.49	32.0	0.70	22.4	-0.80	0.49	0.00	1.00	1.00	0.00	0.00	-0.80	0.49	3.49	-15.37	337.4	135.7	101.7
15.60	4.67	1.48	32.0	0.70	22.4	-0.79	0.49	0.00	1.00	1.00	0.00	0.00	-0.79	0.49	3.50	-15.71	337.1	135.9	101.7
15.51	4.67	1.48	32.0	0.70	22.4	-0.79	0.49	0.00	1.00	1.00	0.00	0.00	-0.79	0.49	3.51	-16.04	336.7	136.1	101.6
15.42	4.67	1.47	32.0	0.70	22.4	-0.79	0.49	0.00	1.00	1.00	0.00	0.00	-0.79	0.49	3.52	-16.37	336.4	136.4	101.6
15.33	4.67	1.47	32.0	0.70	22.4	-0.79	0.48	0.00	1.00	1.00	0.00	0.00	-0.79	0.48	3.53	-16.70	336.1	136.6	101.5
15.24	4.67	1.46	32.0	0.70	22.4	-0.78	0.48	0.00	1.00	1.00	0.00	0.00	-0.78	0.48	3.54	-17.03	335.7	136.8	101.5
15.15	4.67	1.46	32.0	0.70	22.4	-0.78	0.48	0.00	1.00	1.00	0.00	0.00	-0.78	0.48	3.55	-17.36	335.4	137.0	101.4
15.06	4.67	1.45	32.0	0.70	22.4	-0.78	0.48	0.00	1.00	1.00	0.00	0.00	-0.78	0.48	3.56	-17.69	335.1	137.2	101.4
14.97	4.67	1.45	32.0	0.70	22.4	-0.78	0.48	0.00	1.00	1.00	0.00	0.00	-0.78	0.48	3.58	-18.02	334.7	137.4	101.3
14.88	4.67	1.44	32.0	0.70	22.4	-0.77	0.48	0.00	1.00	1.00	0.00	0.00	-0.77	0.48	3.59	-18.34	334.4	137.6	101.3
14.79	4.67	1.44	32.0	0.70	22.4	-0.77	0.47	0.00	1.00	1.00	0.00	0.00	-0.77	0.47	3.60	-18.67	334.1	137.8	101.2

14.70	4.67	1.43	32.0	0.70	22.4	-0.77	0.47	0.00	1.00	1.00	0.00	0.00	-0.77	0.47	3.61	-18.99	333.8	138.1	101.2
14.61	4.67	1.43	32.0	0.70	22.4	-0.77	0.47	0.00	1.00	1.00	0.00	0.00	-0.77	0.47	3.62	-19.31	333.4	138.3	101.1
14.52	4.67	1.42	32.0	0.70	22.4	-0.76	0.47	0.00	1.00	1.00	0.00	0.00	-0.76	0.47	3.63	-19.63	333.1	138.5	101.1
14.43	4.67	1.42	32.0	0.70	22.4	-0.76	0.47	0.00	1.00	1.00	0.00	0.00	-0.76	0.47	3.64	-19.95	332.8	138.7	101.1
14.34	4.67	1.41	32.0	0.70	22.4	-0.76	0.47	0.00	1.00	1.00	0.00	0.00	-0.76	0.47	3.65	-20.27	332.5	138.9	101.0
14.25	4.67	1.41	32.0	0.70	22.4	-0.76	0.46	0.00	1.00	1.00	0.00	0.00	-0.76	0.46	3.66	-20.59	332.2	139.1	101.0
14.16	4.67	1.41	32.0	0.70	22.4	-0.75	0.46	0.00	1.00	1.00	0.00	0.00	-0.75	0.46	3.67	-20.91	331.9	139.3	100.9
14.07	4.67	1.40	32.0	0.70	22.4	-0.75	0.46	0.00	1.00	1.00	0.00	0.00	-0.75	0.46	3.68	-21.22	331.5	139.5	100.9
13.98	4.67	1.40	32.0	0.70	22.4	-0.75	0.46	0.00	1.00	1.00	0.00	0.00	-0.75	0.46	3.69	-21.54	331.2	139.7	100.8
13.89	4.67	1.39	32.0	0.70	22.4	-0.75	0.46	0.00	1.00	1.00	0.00	0.00	-0.75	0.46	3.70	-21.85	330.9	139.9	100.8
13.80	4.67	1.39	32.0	0.70	22.4	-0.74	0.46	0.00	1.00	1.00	0.00	0.00	-0.74	0.46	3.72	-22.16	330.6	140.1	100.7
13.71	4.67	1.38	32.0	0.70	22.4	-0.74	0.46	0.00	1.00	1.00	0.00	0.00	-0.74	0.46	3.73	-22.47	330.3	140.3	100.7
13.62	4.67	1.38	32.0	0.70	22.4	-0.74	0.45	0.00	1.00	1.00	0.00	0.00	-0.74	0.45	3.74	-22.78	330.0	140.5	100.6
13.53	4.67	1.37	32.0	0.70	22.4	-0.74	0.45	0.00	1.00	1.00	0.00	0.00	-0.74	0.45	3.75	-23.09	329.7	140.7	100.6
13.44	4.67	1.37	32.0	0.70	22.4	-0.73	0.45	0.00	1.00	1.00	0.00	0.00	-0.73	0.45	3.76	-23.40	329.4	140.9	100.6
13.35	4.67	1.36	32.0	0.70	22.4	-0.73	0.45	0.00	1.00	1.00	0.00	0.00	-0.73	0.45	3.77	-23.71	329.0	141.1	100.5
13.26	4.67	1.36	32.0	0.70	22.4	-0.73	0.45	0.00	1.00	1.00	0.00	0.00	-0.73	0.45	3.78	-24.02	328.7	141.3	100.5
13.17	4.67	1.35	32.0	0.70	22.4	-0.73	0.45	0.00	1.00	1.00	0.00	0.00	-0.73	0.45	3.79	-24.32	328.4	141.5	100.4
13.08	4.67	1.35	32.0	0.70	22.4	-0.72	0.44	0.00	1.00	1.00	0.00	0.00	-0.72	0.44	3.80	-24.63	328.1	141.7	100.4
12.99	4.67	1.34	32.0	0.70	22.4	-0.72	0.44	0.00	1.00	1.00	0.00	0.00	-0.72	0.44	3.81	-24.93	327.8	141.9	100.3
12.90	4.67	1.34	32.0	0.70	22.4	-0.72	0.44	0.00	1.00	1.00	0.00	0.00	-0.72	0.44	3.82	-25.23	327.5	142.1	100.3
12.81	4.67	1.33	32.0	0.70	22.4	-0.71	0.44	0.00	1.00	1.00	0.00	0.00	-0.71	0.44	3.83	-25.53	327.2	142.3	100.3
12.72	4.67	1.33	32.0	0.70	22.4	-0.71	0.44	0.00	1.00	1.00	0.00	0.00	-0.71	0.44	3.84	-25.83	326.9	142.5	100.2
12.63	4.67	1.32	32.0	0.70	22.4	-0.71	0.44	0.00	1.00	1.00	0.00	0.00	-0.71	0.44	3.85	-26.13	326.6	142.7	100.2
12.54	4.67	1.32	32.0	0.70	22.4	-0.71	0.44	0.00	1.00	1.00	0.00	0.00	-0.71	0.44	3.87	-26.43	326.3	142.9	100.1
12.44	4.67	1.32	32.0	0.70	22.4	-0.70	0.43	0.00	1.00	1.00	0.00	0.00	-0.70	0.43	3.88	-26.72	326.0	143.1	100.1
12.35	4.67	1.31	32.0	0.70	22.4	-0.70	0.43	0.00	1.00	1.00	0.00	0.00	-0.70	0.43	3.89	-27.02	325.7	143.3	100.0
12.26	4.67	1.31	32.0	0.70	22.4	-0.70	0.43	0.00	1.00	1.00	0.00	0.00	-0.70	0.43	3.90	-27.31	325.4	143.5	100.0
12.17	4.67	1.30	32.0	0.70	22.4	-0.70	0.43	0.00	1.00	1.00	0.00	0.00	-0.70	0.43	3.91	-27.61	325.2	143.7	100.0
12.08	4.67	1.30	32.0	0.70	22.4	-0.69	0.43	0.00	1.00	1.00	0.00	0.00	-0.69	0.43	3.92	-27.90	324.9	143.9	99.9
11.99	4.67	1.29	0.0	0.70	0.0	0.00	0.00	0.50	1.00	1.00	-0.50	0.50	-0.50	0.50	3.93	-28.11	324.6	144.1	99.9
11.90	4.67	1.28	0.0	0.70	0.0	0.00	0.00	0.50	1.00	1.00	-0.50	0.50	-0.50	0.50	3.94	-28.32	324.4	144.3	99.9
11.81	4.67	1.26	0.0	0.70	0.0	0.00	0.00	0.50	1.00	1.00	-0.50	0.50	-0.50	0.50	3.95	-28.53	324.2	144.5	99.9
11.72	4.67	1.25	0.0	0.70	0.0	0.00	0.00	0.50	1.00	1.00	-0.50	0.50	-0.50	0.50	3.96	-28.74	324.0	144.7	99.9
11.63	4.67	1.24	0.0	0.70	0.0	0.00	0.00	0.50	1.00	1.00	-0.50	0.50	-0.50	0.50	3.97	-28.95	323.8	145.0	99.9
11.54	4.67	1.23	0.0	0.70	0.0	0.00	0.00	0.50	1.00	1.00	-0.50	0.50	-0.50	0.50	3.98	-29.16	323.6	145.2	99.9
11.45	4.67	1.22	0.0	0.70	0.0	0.00	0.00	0.50	1.00	1.00	-0.50	0.50	-0.50	0.50	3.99	-29.37	323.4	145.4	99.9
11.36	4.67	1.21	0.0	0.70	0.0	0.00	0.00	0.50	1.00	1.00	-0.50	0.50	-0.50	0.50	4.01	-29.58	323.2	145.6	99.9
11.27	4.67	1.20	0.0	0.70	0.0	0.00	0.00	0.50	1.00	1.00	-0.50	0.50	-0.50	0.50	4.02	-29.79	323.0	145.8	99.9
11.18	4.67	1.19	0.0	0.70	0.0	0.00	0.00	0.50	1.00	1.00	-0.50	0.50	-0.50	0.50	4.03	-30.00	322.8	146.1	99.9
11.09	4.67	1.18	0.0	0.70	0.0	0.00	0.00	0.50	1.00	1.00	-0.50	0.50	-0.50	0.50	4.04	-30.21	322.5	146.3	99.9
11.00	4.67	1.17	0.0	0.70	0.0	0.00	0.00	0.50	1.00	1.00	-0.50	0.50	-0.50	0.50	4.05	-30.42	322.3	146.5	99.9
10.91	4.67	1.16	0.0	0.70	0.0	0.00	0.00	0.50	1.00	1.00	-0.50	0.50	-0.50	0.50	4.06	-30.63	322.1	146.7	99.9
10.82	4.67	1.15	0.0	0.70	0.0	0.00	0.00	0.50	1.00	1.00	-0.50	0.50	-0.50	0.50	4.07	-30.85	321.9	147.0	99.9
10.73	4.67	1.14	0.0	0.70	0.0	0.00	0.00	0.50	1.00	1.00	-0.50	0.50	-0.50	0.50	4.08	-31.06	321.7	147.2	99.9
10.64	4.67	1.13	0.0	0.70	0.0	0.00	0.00	0.50	1.00	1.00	-0.50	0.50	-0.50	0.50	4.09	-31.27	321.5	147.4	99.9
10.55	4.67	1.12	0.0	0.70	0.0	0.00	0.00	0.50	1.00	1.00	-0.50	0.50	-0.50	0.50	4.10	-31.48	321.3	147.6	99.9
10.46	4.67	1.11	0.0	0.70	0.0	0.00	0.00	0.50	1.00	1.00	-0.50	0.50	-0.50	0.50	4.11	-31.69	321.1	147.8	99.9
10.37	4.67	1.10	0.0	0.70	0.0	0.00	0.00	0.50	1.00	1.00	-0.50	0.50	-0.50	0.50	4.12	-31.90	320.9	148.1	99.9
10.28	4.67	1.09	0.0	0.70	0.0	0.00	0.00	0.50	1.00	1.00	-0.50	0.50	-0.50	0.50	4.13	-32.11	320.7	148.3	99.9
10.19	4.67	1.07	0.0	0.70	0.0	0.00	0.00	0.50	1.00	1.00	-0.50	0.50	-0.50	0.50	4.14	-32.32	320.4	148.5	99.9
10.10	4.67	1.06	0.0	0.70	0.0	0.00	0.00	0.50	1.00	1.00	-0.50	0.50	-0.50	0.50	4.16	-32.53	320.2	148.7	99.9
10.01	4.67	1.05	0.0	0.70	0.0	0.00	0.00	0.50	1.00	1.00	-0.50	0.50	-0.50	0.50	4.17	-32.74	320.0	148.9	99.9
9.92	4.67	1.04	0.0	0.70	0.0	0.00	0.00	0.50	1.00	1.00	-0.50	0.50	-0.50	0.50	4.18	-32.95	319.8	149.2	99.9
9.83	4.67	1.03	0.0	0.70	0.0	0.00	0.00	0.50	1.00	1.00	-0.50	0.50	-0.50	0.50	4.20	-33.16	319.6	149.4	99.9
9.74	4.67	1.02	0.0	0.70	0.0	0.00	0.00	0.50	1.00	1.00	-0.50	0.50	-0.50	0.50	4.22	-33.37	319.4	149.6	99.9
9.65	4.67	1.01	0.0	0.70	0.0	0.00	0.00	0.50	1.00	1.00	-0.50	0.50	-0.50	0.50	4.24	-33.58	319.2	149.9	99.9
9.56	4.67	1.00	0.0	0.70	0.0	0.00	0.00	0.50	1.00	1.00	-0.50	0.50	-0.50	0.50	4.26	-33.79	319.0	150.1	99.9
9.47	4.67	0.99	0.0	0.70	0.0	0.00	0.00	0.50	1.00	1.00	-0.50	0.50	-0.50	0.50	4.28	-34.00	318.8	150.3	99.9
9.38	4.67	0.98	0.0	0.70	0.0	0.00	0.00	0.50	1.00	1.00	-0.50	0.50	-0.50	0.50	4.29	-34.21	318.5	150.5	99.9
9.29	4.67	0.97	0.0	0.70	0.0	0.00	0.00	0.50	1.00	1.00	-0.50	0.50	-0.50	0.50	4.31	-34.42	318.3	150.8	99.9
9.20	4.67	0.96	0.0	0.70	0.0	0.00	0.00	0.50	1.00	1.00	-0.50	0.50	-0.50	0.50	4.33	-34.63	318.1	151.0	99.9
9.11	4.67	0.95	0.0	0.70	0.0	0.00	0.00	0.50	1.00	1.00	-0.50	0.50	-0.50	0.50	4.35	-34.84	317.9	151.2	99.9
9.02	4.67	0.94	0.0	0.70	0.0	0.00	0.00	0.50	1.00	1.00	-0.50	0.50	-0.50	0.50	4.37	-35.05	317.7	151.5	99.9
8.93	4.67	0.93	0.0	0.70	0.0	0.00	0.00	0.50	1.00	1.00	-0.50	0.50	-0.50	0.50	4.39	-35.26	317.5	151.7	99.9
8.84	4.67	0.92	0.0	0.70	0.0	0.00	0.00	0.50	1.00	1.00	-0.50	0.50	-0.50	0.50	4.41	-35.47	317.3	151.9	99.9
8.75	4.67	0.91	0.0	0.70	0.0	0.00	0.00	0.50	1.00	1.00	-0.50	0.50	-0.50	0.50	4.42	-35.68	317.1	152.1	99.9
8.66	4.67	0.90	0.0	0.70	0.0	0.00	0.00	0.50	1.00	1.00	-0.50	0.50	-0.50	0.50	4.44	-35.90	316.9	152.4	99.9
8.57	4.67	0.88	0.0	0.70	0.0	0.00	0.00	0.50	1.00	1.00	-0.50	0.50	-0.50	0.50	4.46	-36.11	316.7	152.6	99.9
8.48	4.67	0.87	0.0	0.70	0.0	0.00	0.00	0.50	1.00	1.00	-0.50	0.50	-0.50	0.50	4.48	-36.32	316.4	152.8	99.9
8.39	4.67	0.86	0.0	0.70	0.0	0.00	0.00	0.50	1.00	1.00	-0.50	0.50	-0.50	0.50	4.50	-36.53	316.2	153.1	99.9
8.30	4.67	0.85	0.0	0.70	0.0	0.00	0.00	0.50	1.00	1.00	-0.50	0.50	-0.50	0.50	4.52	-36.74	316.0	153.3	99.9
8.21	4.67	0.84	0.0	0.70	0.0	0.00	0.00	0.50	1.00	1.00	-0.50	0.50	-0.50	0.50	4.53	-36.95	315.8	153.5	99.9
8.12	4.67	0.83	0.0	0.70	0.0	0.00	0.00	0.50	1.00	1.00	-0.50	0.50	-0.50	0.50	4.55	-37.16	315.6	153.7	99.9
8.03	4.67	0.82	0.0	0.70	0.0	0.00	0.00	0.50	1.00	1.00	-0.50	0.50	-0.50	0.50	4.57	-37.37	315.4	154.0	99.9
7.94	4.67	0.81	0.0	0.70	0.0	0.00	0.00	0.50	1.00	1.00	-0.50	0.50	-0.50	0.50	4.59	-37.58	315.2	154.2	99.9
7.85	4.67	0.80	0.0	0.70	0.0	0.00	0.00	0.50	1.00	1.00	-0.50	0.50	-0.50	0.50	4.61	-37.79	315.0	154.4	99.9
7.76	4.67	0.79	0.0	0.70	0.0	0.00	0.00	0.50	1.00	1.00	-0.50	0.50	-0.50	0.50	4.63	-38.00	314.8	154.7	99.9
7.67	4.67	0.78	0.0	0.70	0.0	0.00	0.00	0.50	1.00	1.00	-0.50	0.50	-0.50	0.50	4.64	-38.21	314.5	154.9	99.9
7.58	4.67	0.77	0.0	0.70	0.0	0.00	0.00	0.50	1.00	1.00	-0.50	0.50	-0.50	0.50	4.66	-38.42	314.3	155.1	99.9
7.48	4.67	0.76	0.0	0.70	0.0	0.00	0.00	0.50	1.00	1.00	-0.50	0.50	-0.50	0.50	4.68	-38.63	314.1	155.3	99.9
7.39	4.67	0.75	0.0	0.70	0.0	0.00	0.00	0.50	1.00	1.00	-0.50	0.50	-0.50	0.50	4.70	-38.84	313.9	155.6	99.9
7.30	4.67	0.74	0.0	0.70	0.0	0.00	0.00	0.50	1.00	1.00	-0.50	0.50	-0.50	0.50	4.72	-39.05	313.7	155.8	99.9
7.21	4.67	0.73	0.0	0.70	0.0	0.00	0.00	0.50	1.00	1.00	-0.50	0.50	-0.50	0.50	4.74	-39.26	313.5	156.0	99.9
7.12	4.67	0.72	0.0	0.70	0.0	0.00	0.00	0.50	1.00	1.00	-0.50	0.50	-0.50	0.50	4.75	-39.47	313.3	156.3	99.9
7.03	4.67	0.71	0.0	0.70	0.0	0.00	0.00	0.50	1.00	1.00	-0.50	0.50	-0.50	0.50	4.77	-39.68	313.1	156.5	99.9
6.94	4.67	0.69	0.0	0.70	0.0	0.00	0.00	0.50	1.00	1.00	-0.50	0.50	-0.50	0.50	4.79	-39.89	312.9	156.7	99.9
6.85	4.67	0.68	0.0	0.70	0.0	0.00	0.00	0.50	1.00	1.00	-0.50	0.50	-0.50	0.50	4.81	-40.10	312.7	156.9	99.9
6.76	4.67	0.67	0.0	0.70	0.0	0.00	0.00	0.50	1.00	1.00	-0.50	0.50	-0.50	0.50	4.83	-40.31	312.4	157.2	99.9
6.67	4.67	0.66	0.0	0.70	0.0	0.00	0.00	0.50	1.00	1.00	-0.50	0.50	-0.50	0.50	4.85	-40.52	312.2	157.4	99.9
6.58	4.67	0.65	0.0	0.70	0.0	0.00	0.00	0.50	1.00	1.00	-0.50	0.50	-0.50	0.50	4.87	-40.73	312.0	157.6	99.9
6.49	4.67	0.64	0.0	0.70	0.0	0.00	0.00	0.50	1.00	1.00	-0.50	0.50	-0.50	0.50	4.88	-40.95	311.8	157.9	99.9
6.40	4.67	0.63	0.0	0.70	0.0	0.00	0.00	0.50	1.00	1.00	-0.50	0.50	-0.50	0.50	4.90	-41.16	311.6	158.1	99.9
6.31	4.67	0.62	0.0	0.70	0.0	0.00	0.00	0.50	1.00	1.00	-0.50	0.50	-0.50	0.50	4.92	-41.37	311.4	158.3	99.9
6.22	4.67	0.61	0.0	0.70	0.0	0.00	0.00	0.50	1.00	1.00	-0.50	0.50	-0.50	0.50	4.94	-41.58	311.2	158.6	99.9
6.13	4.67	0.60	0.0	0.70	0.0	0.00	0.00	0.50	1.00	1.00	-0.50	0.50	-0.50	0.50	4.96	-41.79	311.0	158.8	99.9
6.04	4.67	0.59	0.0	0.70	0.0	0.00	0.00	0.50	1.00	1.00	-0.50	0.50	-0.50	0.50	4.98	-42.00	310.8	159.0	99.9
5.95	4.67	0.58	0.0	0.70	0.0	0.00	0.00	0.50	1.00	1.00	-0.50	0.50	-0.50	0.50	4.99	-42.21	310.6	159.2	99.9
5.86	4.67	0.57	0.0	0.70	0.0	0.00	0.00	0.50	1.00	1.00	-0.50	0.50	-0.50	0.50	5.01	-42.42	310.3	159.5	99.9
5.77	4.67	0.56	0.0	0.70	0.0	0.00	0.00	0.50	1.00	1.00	-0.50	0.50	-0.50	0.50	5.03	-42.63	310.1	159.7	99.9
5.68	4.67	0.55	0.0	0.70	0.0	0.00	0.00	0.50	1.00	1.00	-0.50	0.50	-0.50	0.50	5.05	-42.84	309.9	159.9	99.9
5.59	4.67	0.54	0.0	0.70	0.0	0.00	0.00	0.50	1.00	1.00	-0.50	0.50	-0.50	0.50	5.07	-43.05	309.7	160.2	99.9
5.50	4.67	0.53	0.0	0.70	0.0	0.00	0.00	0.50	1.00	1.00	-0.50	0.50	-0.50	0.50	5.09	-43.26	309.5	160.4	99.9
5.41	4.67	0.52	0.0	0.70	0.0	0.00	0.00	0.50	1.00	1.00	-0.50	0.50	-0.50	0.50	5.10	-43.47	309.3	160.6	99.9
5.32	4.67	0.50	0.0	0.70	0.0	0.00	0.00	0.50	1.00	1.00	-0.50	0.50	-0.50	0.50	5.12	-43.68	309.1	160.8	99.9
5.23	4.67	0.49	0.0	0.70	0.0	0.00	0.00	0.50	1.00	1.00	-0.50	0.50	-0.50	0.50	5.14	-43.89	308.9	161.1	99.9
5.14	4.67	0.48	0.0	0.70	0.0	0.00	0.00	0.50	1.00	1.00	-0.50	0.50	-0.50	0.50	5.16	-44.10	308.7	161.3	99.9
5.05	4.67	0.47	0.0	0.70	0.0	0.00	0.00	0.50	1.00	1.00	-0.50	0.50	-0.50	0.50	5.18	-44.31	308.4	161.5	99.9
4.96	4.67	0.46	0.0	0.70	0.0	0.00	0.00	0.50	1.00	1.00	-0.50	0.50	-0.50	0.50	5.20	-44.52	308.2	161.8	99.9
4.87	4.67	0.45	0.0	0.70	0.0	0.00	0.00	0.50	1.00	1.00	-0.50	0.50	-0.50	0.50	5.21	-44.73	308.0	162.0	99.9
4.78	4.67	0.44	0.0	0.70	0.0	0.00	0.00	0.50	1.00	1.00	-0.50	0.50	-0.50	0.50	5.23	-44.94	307.8	162.2	99.9
4.69	4.67	0.43	0.0	0.70	0.0	0.00	0.00	0.50	1.00	1.00	-0.50	0.50	-0.50	0.50	5.25	-45.15	307.6	162.4	99.9
4.60	4.67	0.42	0.0	0.70	0.0	0.00	0.00	0.50	1.00	1.00	-0.50	0.50	-0.50	0.50	5.27	-45.36	307.4	162.7	99.9
4.51	4.67	0.41	0.0	0.70	0.0	0.00	0.00	0.50	1.00	1.00	-0.50	0.50	-0.50	0.50	5.29	-45.57	307.2	162.9	99.9
4.42	4.67	0.40	0.0	0.70	0.0	0.00	0.00	0.50	1.00	1.00	0.00	0.00	0.00	0.00	5.31	-45.57	307.2	162.9	99.9
4.33	4.67	0.39	0.0	0.70	0.0	0.00	0.00	0.50	1.00	1.00	0.00	0.00	0.00	0.00	5.33	-45.57	307.2	162.9	99.9
4.24	4.67	0.39	0.0	0.70	0.0	0.00	0.00	0.50	1.00	1.00	0.00	0.00	0.00	0.00	5.34	-45.57	307.2	163.0	99.9

4.15	4.67	0.38	0.0	0.70	0.0	0.00	0.00	0.50	1.00	1.00	0.00	0.00	0.00	0.00	5.36	-45.57	307.2	163.0	99.9
4.06	4.67	0.37	0.0	0.70	0.0	0.00	0.00	0.50	1.00	1.00	0.00	0.00	0.00	0.00	5.38	-45.57	307.2	163.0	99.9
3.97	4.67	0.36	0.0	0.70	0.0	0.00	0.00	0.50	1.00	1.00	0.00	0.00	0.00	0.00	5.40	-45.57	307.2	163.0	99.9
3.88	4.67	0.35	0.0	0.70	0.0	0.00	0.00	0.50	1.00	1.00	0.00	0.00	0.00	0.00	5.42	-45.57	307.2	163.0	99.9
3.79	4.67	0.34	0.0	0.70	0.0	0.00	0.00	0.50	1.00	1.00	0.00	0.00	0.00	0.00	5.44	-45.57	307.2	163.0	99.9
3.70	4.67	0.34	0.0	0.70	0.0	0.00	0.00	0.50	1.00	1.00	0.00	0.00	0.00	0.00	5.45	-45.57	307.2	163.1	99.9
3.61	4.67	0.33	0.0	0.70	0.0	0.00	0.00	0.50	1.00	1.00	0.00	0.00	0.00	0.00	5.47	-45.57	307.2	163.1	99.9
3.52	4.67	0.32	0.0	0.70	0.0	0.00	0.00	0.50	1.00	1.00	0.00	0.00	0.00	0.00	5.49	-45.57	307.2	163.1	99.9
3.43	4.67	0.31	0.0	0.70	0.0	0.00	0.00	0.50	1.00	1.00	0.00	0.00	0.00	0.00	5.51	-45.57	307.2	163.1	99.9
3.34	4.67	0.30	0.0	0.70	0.0	0.00	0.00	0.50	1.00	1.00	0.00	0.00	0.00	0.00	5.53	-45.57	307.2	163.1	99.9
3.25	4.67	0.30	0.0	0.70	0.0	0.00	0.00	0.50	1.00	1.00	0.00	0.00	0.00	0.00	5.55	-45.57	307.2	163.2	99.9
3.16	4.67	0.29	0.0	0.70	0.0	0.00	0.00	0.50	1.00	1.00	0.00	0.00	0.00	0.00	5.56	-45.57	307.2	163.2	99.9
3.07	4.67	0.28	0.0	0.70	0.0	0.00	0.00	0.50	1.00	1.00	0.00	0.00	0.00	0.00	5.58	-45.57	307.2	163.2	99.9
2.98	4.67	0.27	0.0	0.70	0.0	0.00	0.00	0.50	1.00	1.00	0.00	0.00	0.00	0.00	5.60	-45.57	307.2	163.2	99.9
2.89	4.67	0.26	0.0	0.70	0.0	0.00	0.00	0.50	1.00	1.00	0.00	0.00	0.00	0.00	5.62	-45.57	307.2	163.2	99.9
2.80	4.67	0.26	0.0	0.70	0.0	0.00	0.00	0.50	1.00	1.00	0.00	0.00	0.00	0.00	5.64	-45.57	307.2	163.2	99.9
2.71	4.67	0.25	0.0	0.70	0.0	0.00	0.00	0.50	1.00	1.00	0.00	0.00	0.00	0.00	5.66	-45.57	307.2	163.3	99.9
2.62	4.67	0.24	0.0	0.70	0.0	0.00	0.00	0.50	1.00	1.00	0.00	0.00	0.00	0.00	5.67	-45.57	307.2	163.3	99.9
2.53	4.67	0.23	0.0	0.70	0.0	0.00	0.00	0.50	1.00	1.00	0.00	0.00	0.00	0.00	5.69	-45.57	307.2	163.3	99.9
2.43	4.67	0.22	0.0	0.70	0.0	0.00	0.00	0.50	1.00	1.00	0.00	0.00	0.00	0.00	5.71	-45.57	307.2	163.3	99.9
2.34	4.67	0.22	0.0	0.70	0.0	0.00	0.00	0.50	1.00	1.00	0.00	0.00	0.00	0.00	5.73	-45.57	307.2	163.3	99.9
2.25	4.67	0.21	0.0	0.70	0.0	0.00	0.00	0.50	1.00	1.00	0.00	0.00	0.00	0.00	5.75	-45.57	307.2	163.4	99.9
2.16	4.67	0.20	0.0	0.70	0.0	0.00	0.00	0.50	1.00	1.00	0.00	0.00	0.00	0.00	5.77	-45.57	307.2	163.4	99.9
2.07	4.67	0.19	0.0	0.70	0.0	0.00	0.00	0.50	1.00	1.00	0.00	0.00	0.00	0.00	5.79	-45.57	307.2	163.4	99.9
1.98	4.67	0.18	0.0	0.70	0.0	0.00	0.00	0.50	1.00	1.00	0.00	0.00	0.00	0.00	5.80	-45.57	307.2	163.4	99.9
1.89	4.67	0.17	0.0	0.70	0.0	0.00	0.00	0.50	1.00	1.00	0.00	0.00	0.00	0.00	5.82	-45.57	307.2	163.4	99.9
1.80	4.67	0.17	0.0	0.70	0.0	0.00	0.00	0.50	1.00	1.00	0.00	0.00	0.00	0.00	5.84	-45.57	307.2	163.5	99.9
1.71	4.67	0.16	0.0	0.70	0.0	0.00	0.00	0.50	1.00	1.00	0.00	0.00	0.00	0.00	5.86	-45.57	307.2	163.5	99.9
1.62	4.67	0.15	0.0	0.70	0.0	0.00	0.00	0.50	1.00	1.00	0.00	0.00	0.00	0.00	5.88	-45.57	307.2	163.5	99.9
1.53	4.67	0.14	0.0	0.70	0.0	0.00	0.00	0.50	1.00	1.00	0.00	0.00	0.00	0.00	5.90	-45.57	307.2	163.5	99.9
1.44	4.67	0.13	0.0	0.70	0.0	0.00	0.00	0.50	1.00	1.00	0.00	0.00	0.00	0.00	5.91	-45.57	307.2	163.5	99.9
1.35	4.67	0.13	0.0	0.70	0.0	0.00	0.00	0.50	1.00	1.00	0.00	0.00	0.00	0.00	5.93	-45.57	307.2	163.5	99.9
1.26	4.67	0.12	0.0	0.70	0.0	0.00	0.00	0.50	1.00	1.00	0.00	0.00	0.00	0.00	5.95	-45.57	307.2	163.6	99.9
1.17	4.67	0.11	0.0	0.70	0.0	0.00	0.00	0.50	1.00	1.00	0.00	0.00	0.00	0.00	5.97	-45.57	307.2	163.6	99.9
1.08	4.67	0.10	0.0	0.70	0.0	0.00	0.00	0.50	1.00	1.00	0.00	0.00	0.00	0.00	5.99	-45.57	307.2	163.6	99.9
0.99	4.67	0.09	0.0	0.70	0.0	0.00	0.00	0.50	1.00	1.00	0.00	0.00	0.00	0.00	6.01	-45.57	307.2	163.6	99.9
0.90	4.67	0.09	0.0	0.70	0.0	0.00	0.00	0.50	1.00	1.00	0.00	0.00	0.00	0.00	6.02	-45.57	307.2	163.6	99.9
0.81	4.67	0.08	0.0	0.70	0.0	0.00	0.00	0.50	1.00	1.00	0.00	0.00	0.00	0.00	6.04	-45.57	307.2	163.7	99.9
0.72	4.67	0.07	0.0	0.70	0.0	0.00	0.00	0.50	1.00	1.00	0.00	0.00	0.00	0.00	6.06	-45.57	307.2	163.7	99.9
0.63	4.67	0.06	0.0	0.70	0.0	0.00	0.00	0.50	1.00	1.00	0.00	0.00	0.00	0.00	6.08	-45.57	307.2	163.7	99.9
0.54	4.67	0.05	0.0	0.70	0.0	0.00	0.00	0.50	1.00	1.00	0.00	0.00	0.00	0.00	6.10	-45.57	307.2	163.7	99.9
0.45	4.67	0.04	0.0	0.70	0.0	0.00	0.00	0.50	1.00	1.00	0.00	0.00	0.00	0.00	6.12	-45.57	307.2	163.7	99.9
0.36	4.67	0.04	0.0	0.70	0.0	0.00	0.00	0.50	1.00	1.00	0.00	0.00	0.00	0.00	6.13	-45.57	307.2	163.7	99.9
0.27	4.67	0.03	0.0	0.70	0.0	0.00	0.00	0.50	1.00	1.00	0.00	0.00	0.00	0.00	6.15	-45.57	307.2	163.8	99.9
0.18	4.67	0.02	0.0	0.70	0.0	0.00	0.00	0.50	1.00	1.00	0.00	0.00	0.00	0.00	6.17	-45.57	307.2	163.8	99.9
0.09	4.67	0.01	0.0	0.70	0.0	0.00	0.00	0.50	1.00	1.00	0.00	0.00	0.00	0.00	6.19	-45.57	307.2	163.8	99.9
0.00	4.67	0.00	0.0	0.70	0.0	0.00	0.00	0.50	1.00	1.00	0.00	0.00	0.00	0.00	6.21	-45.57	307.2	163.8	99.9

SETTLEMENT based on Ultimate Loading by Vesic Method (1977):
Ztip=45.00 Btip= 1.17 Cp= 0.030 Cs= 0.058
Xpp=0.420-in Xps= 0.012-in Xtip= 0.432-in
Cp & Cs are average value at bearing stratum from pile tip extend to 10 Btip

At loading: Qtip=195.7-kp Qtop= 307.2-kp Qside= 111.4-kp
Xtip=0.432-in Xtop= 0.704-in Xshaft= 0.272-in

LOAD - TOTAL SETTLEMENT RELATION (from t-z, and q-w curves):
Based on Vesic Method (1977)

Xtop -in	Xshaft -in	Xtip -in	Qtip -kp	Qside -kp	Qtotal -kp
0.0003	0.0003	0.0000	0.3	0.2	0.5
0.0152	0.0115	0.0037	3.1	18.9	21.9
0.0289	0.0214	0.0075	5.9	34.9	40.8
0.0415	0.0303	0.0112	8.7	48.5	57.2
0.0532	0.0382	0.0150	11.5	60.1	71.7
0.0640	0.0453	0.0187	14.4	69.9	84.3
0.0741	0.0516	0.0225	17.2	78.1	95.3
0.0836	0.0574	0.0262	20.0	84.9	104.9
0.0925	0.0625	0.0299	22.8	90.5	113.4
0.1009	0.0672	0.0337	25.6	95.2	120.8
0.1089	0.0715	0.0374	28.4	98.9	127.3
0.1166	0.0754	0.0412	31.1	101.9	133.1
0.1240	0.0790	0.0449	33.9	104.3	138.2
0.1311	0.0824	0.0487	36.6	106.2	142.9
0.1380	0.0856	0.0524	39.3	107.7	147.0
0.1447	0.0886	0.0561	42.0	108.8	150.9
0.1513	0.0914	0.0599	44.7	109.7	154.4
0.1578	0.0941	0.0636	47.4	110.3	157.6
0.1641	0.0967	0.0674	50.0	110.7	160.7
0.1704	0.0993	0.0711	52.6	111.1	163.6
0.1766	0.1017	0.0749	55.1	111.3	166.4
0.1827	0.1041	0.0786	57.7	111.4	169.1
0.1888	0.1065	0.0823	60.2	111.4	171.6
0.1948	0.1088	0.0861	62.7	111.4	174.1
0.2008	0.1110	0.0898	65.2	111.4	176.6
0.2068	0.1132	0.0936	67.6	111.3	178.9
0.2127	0.1154	0.0973	70.0	111.2	181.2
0.2185	0.1175	0.1011	72.4	111.1	183.5
0.2244	0.1196	0.1048	74.7	111.0	185.7
0.2301	0.1216	0.1085	77.0	110.8	187.8
0.2359	0.1236	0.1123	79.3	110.6	189.9
0.2416	0.1255	0.1160	81.5	110.4	191.9
0.2472	0.1275	0.1198	83.7	110.1	193.8
0.2528	0.1293	0.1235	85.9	109.9	195.8
0.2584	0.1312	0.1273	88.0	109.6	197.6
0.2640	0.1330	0.1310	90.1	109.3	199.5
0.2695	0.1348	0.1347	92.2	109.1	201.3
0.2750	0.1366	0.1385	94.3	108.9	203.2
0.2807	0.1384	0.1422	96.3	108.9	205.2
0.2862	0.1402	0.1460	98.2	108.8	207.1
0.2916	0.1419	0.1497	100.2	108.7	208.9
0.2970	0.1436	0.1535	102.1	108.5	210.6
0.3024	0.1452	0.1572	104.0	108.4	212.3
0.3078	0.1468	0.1609	105.8	108.2	214.0
0.3131	0.1484	0.1647	107.6	107.9	215.6
0.3183	0.1499	0.1684	109.4	107.7	217.1
0.3236	0.1514	0.1722	111.1	107.4	218.6
0.3288	0.1528	0.1759	112.9	107.1	220.0
0.3339	0.1543	0.1797	114.5	106.8	221.4
0.3390	0.1556	0.1834	116.2	106.5	222.7
0.3441	0.1570	0.1871	117.8	106.2	224.0
0.3491	0.1583	0.1909	119.4	105.8	225.2
0.3542	0.1595	0.1946	121.0	105.5	226.5
0.3591	0.1608	0.1984	122.5	105.1	227.6
0.3641	0.1620	0.2021	124.0	104.8	228.8
0.3690	0.1632	0.2059	125.5	104.4	229.9

0.3740	0.1644	0.2096	126.9	104.1	231.0
0.3788	0.1655	0.2133	128.4	103.7	232.1
0.3837	0.1666	0.2171	129.8	103.4	233.2
0.3886	0.1678	0.2208	131.1	103.1	234.2
0.3934	0.1689	0.2246	132.5	102.8	235.3
0.3983	0.1700	0.2283	133.8	102.6	236.3
0.4031	0.1710	0.2321	135.1	102.3	237.4
0.4079	0.1721	0.2358	136.3	102.1	238.5
0.4127	0.1732	0.2395	137.6	101.9	239.5
0.4175	0.1742	0.2433	138.8	101.8	240.6
0.4223	0.1752	0.2470	140.0	101.6	241.6
0.4270	0.1762	0.2508	141.2	101.5	242.7
0.4318	0.1772	0.2545	142.3	101.3	243.7
0.4365	0.1782	0.2583	143.5	101.2	244.6
0.4411	0.1791	0.2620	144.6	101.0	245.5
0.4458	0.1800	0.2657	145.7	100.7	246.4
0.4504	0.1809	0.2695	146.8	100.4	247.2
0.4549	0.1817	0.2732	147.8	100.0	247.8
0.4593	0.1824	0.2770	148.9	99.5	248.3
0.4637	0.1830	0.2807	149.9	98.8	248.6
0.4686	0.1841	0.2845	150.9	99.2	250.1
0.4732	0.1850	0.2882	151.9	99.1	251.0
0.4778	0.1858	0.2919	152.8	99.0	251.9
0.4823	0.1867	0.2957	153.8	98.9	252.7
0.4869	0.1875	0.2994	154.7	98.8	253.6
0.4915	0.1883	0.3032	155.7	98.7	254.4
0.4960	0.1891	0.3069	156.6	98.6	255.2
0.5005	0.1899	0.3107	157.5	98.5	256.0
0.5050	0.1906	0.3144	158.4	98.4	256.8
0.5095	0.1914	0.3181	159.2	98.3	257.5
0.5140	0.1921	0.3219	160.1	98.2	258.3
0.5185	0.1929	0.3256	160.9	98.1	259.0
0.5229	0.1936	0.3294	161.8	98.0	259.8
0.5274	0.1943	0.3331	162.6	97.9	260.5
0.5318	0.1950	0.3368	163.4	97.8	261.2
0.5363	0.1957	0.3406	164.2	97.7	261.9
0.5407	0.1964	0.3443	165.0	97.6	262.6
0.5451	0.1970	0.3481	165.8	97.5	263.3
0.5495	0.1977	0.3518	166.6	97.4	263.9
0.6310	0.2088	0.4222	179.6	95.4	275.0
0.7098	0.2172	0.4925	189.8	93.4	283.3
0.7847	0.2218	0.5629	195.7	91.5	287.2
0.8534	0.2201	0.6333	194.9	89.5	284.4
0.9148	0.2111	0.7036	186.1	87.5	273.7

At Qwork= 109.00-kp Settlement= 0.08787-in
At Qwork= 109.00-kp Secant Stiffness Kqx= 1240.45-kp/-in
At Xallow= 1.00-in Q= 99999.00-kp
Note: If the program cannot find a result or the result exceeds the upper limit. The result will be displayed as 99999.

SUMMARY:

Total Ultimate Capacity (Down)= 307.185-kp Total Ultimate Capacity (Up)= 163.819-kp
Total Allowable Capacity (Down)= 120.968-kp Total Allowable Capacity (Up)= 85.013-kp

Weight above Ground= 0.00 Total Pile Weight= 6.21-kp *Soil Weight is not included
Side Resistance (Down)= 111.441-kp Side Resistance (Up)= 157.610-kp
Tip Resistance (Down)= 195.744-kp Tip Resistance (Up)= 0.000-kp
Negative Friction, Qneg= -45.575-kp, which has been subtracted from Total Ultimate Capacity (Down)
Negative friction does not affect Total Uplift Ultimate Capacity (Up)

OK! Qallow > Q * Vertical Load, Q= 109.0 -kp

FACTOR OF SAFETY:

FSside	FStip	FSup	FSweight
2.0	3.0	2.0	1.0

* FStorsion = FSside

Notes:
* Settlement in the program is Elastic Settlement only. Consolidation Settlement is not calculated!
Length - Pile length, distance from pile top to tip (not from ground surface)
Width or D - Width of pile shaft (pile diameter)
Ds and Dl - Short Side and Long Side of Footing
Area - Section area of pile shaft or tip area of pile
Sv - Vertical stress in soils (It may be limited based on critical depth, Z_lim or Z/D
qult - Ultimate tip resistance (pressure)
Qtip_dw - Ultimate downward tip resistance (Force or Capacity)
Qtip_up - Ultimate uplift tip resistance for belled pile or uplift plate (Force or Capacity)
Torsion - Ultimate torsion resistance for single pile (Capacity)
dz - Small Segment of Depth for Calculation
Zs - Soil Depth, Depth from ground surface
Zp - Pile Depth, Depth from pile top
Prem - Primer of pile shaft
Phi - Soil internal friction angle (between soils)
Kf - Friction factor to convert Phi to Delta
Delta - Ski friction between soil and pile (function of Phi. It is different from Phi)
f_dw - Downward Resistance between soil and pile from Delta
f_up - Uplift Resistance between soil and pile from Delta
C - Soil cohesion (between soils)
Ca - Adhesion between soil and pile (function of C. It is different from C) Ca=KaKcC
Ka - Adhesion ratio, C/Ca
Kc - Adhesion factor defended by users
Ca_dw - Downward adhesion between pile and soil
Ca_up - Uplift adhesion between pile and soil
Sf_dw - Downward side resistance (sum of friction and adhesion, f_dw + Ca_dw)
Sf_up - Uplift side resistance (sum of friction and adhesion, f_up + Ca_up)
Torsion side resistance = (Sf_dw+Sf_up)/2 * pile diameter/2
Weight - Weight of Pile shaft
Qneg - negative friction Resistance
Qside - Ultimate side resistance (Qside_dw or Qside_up)
Qtip - Ultimate tip resistance (Qtip_dw or Qtip_up for uplift plate)
Q_dw - Ultimate downward capacity (Qtip + Qside_dw)
Q_up - Ultimate uplift capacity (Weight + Qside_up)
E - Elastic modules
Xs - Settlement due to axial deformation of pile shaft
Xpp - Settlement due to point load from pile tip
Xps- Settlement due to load from pile shaft
Xtop - Total settlement, Xs + Xpp + Xps
Xtip - Tip settlement, Xpp + Xps
Xshaft - Shaft deformation, Xs
Xallow - Allowable settlement specified by users
Qwork - Vertical working load applied to pile
Qallow - Vertical allowable load, Qult/F.S.

VERTICAL ANALYSIS

Figure 1

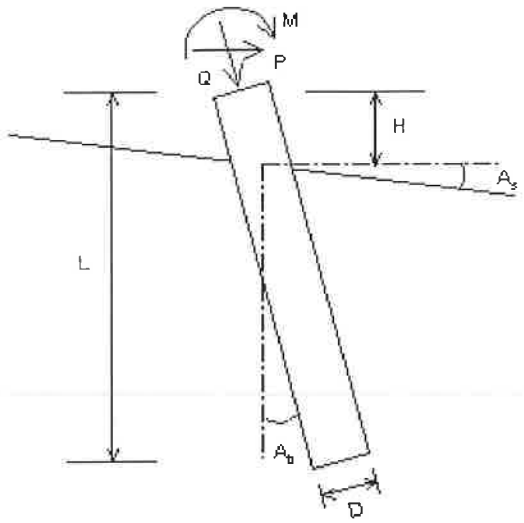

Drilled Pile (dia <=24 in. or 61 cm)

Loads:

Load Factor for Vertical Loads= 1.0
Load Factor for Lateral Loads= 1.0
Loads Supported by Pile Cap= 0 %
Shear Condition: Static

(with Load Factor)
Vertical Load, Q= 100.0 -kp

Profile:

Pile Length, L= 50.0 -ft
Top Height, H= 0 -ft
Slope Angle, As= 0
Batter Angle, Ab= 0

* Zero Friction *
Zero Friction Start: 0 -ft End: 3.5 -ft
* Negative Friction *
Negative Friction Start: 3.5 -ft End: 32 -ft with Factor: 1

Soil Data:

Depth -ft	Gamma -lb/f3	Phi	C -kp/f2	K -lb/i3	e50 or Dr %	Nspt
0	120.0	0.0	0.500	276.5	0.92	9
3.5	126.9	28	0.250	231.7	0.98	8
8.5	108.0	0.0	0.350	44.2	1.74	3
12	48.4	0.0	0.350	41.5	1.81	3
19.5	46.7	30	0.00	17.4	23.30	6
24.5	57.9	34	0.00	57.7	49.28	17
35	61.2	36	0.00	105.5	69.49	34

Pile Data:

Depth -ft	Width -in	Area -in2	Per. -in	I -in4	E -kp/i2	Weight -kp/f
0.0	24	452.4	75.4	16286.0	3000	0.471
50.0						

Vertical Capacity:

Weight above Ground= 0.00 Total Weight= 16.11-kp *Soil Weight is not included
Side Resistance (Down)= 17.478-kp Side Resistance (Up)= 123.176-kp
Tip Resistance (Down)= 278.385-kp Tip Resistance (Up)= 0.000-kp
Total Ultimate Capacity (Down) Qult= 295.863-kp Total Ultimate Capacity (Up)= 139.281-kp
Total Allowable Capacity (Down) Qallow= 101.534-kp Total Allowable Capacity (Up) Qallow= 77.693-kp
OK! Qallow > Q

Settlement Calculation:

At Q= 100.00-kp Settlement= 0.35193-in
At Xallow= 1.00-in Q= 208.85440-kp

Note: If the program cannot find a result or the result exceeds the upper limit. The result will be displayed as 99999.

ALLOWABLE CAPACITY vs FOUNDATION DEPTH

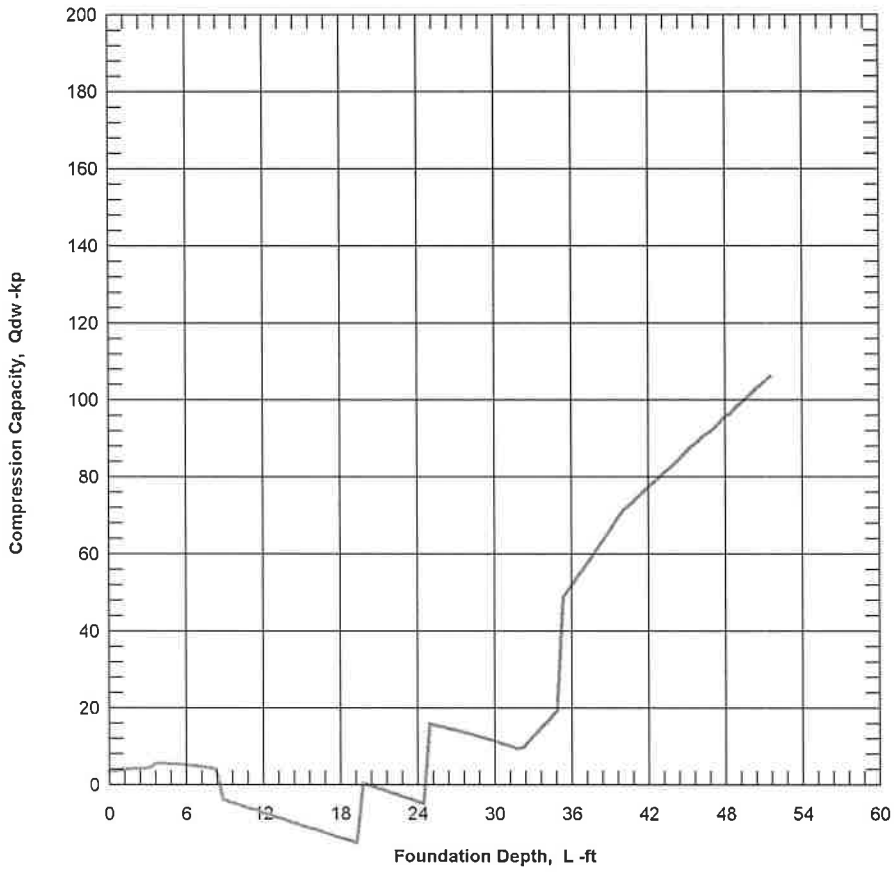

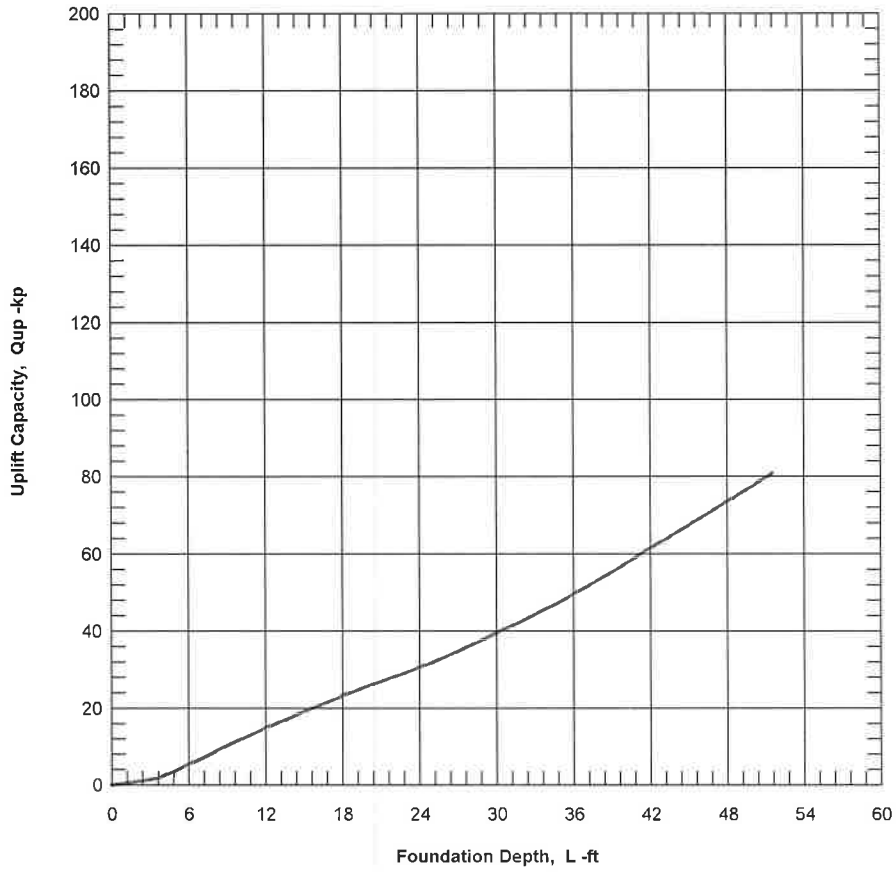

CivilTech Software

16G136 - 24-in-dia Drilled Pier
50-ft-deep; Using B-1 data

Figure 1

```
*****************************************************************
                    ALLPILE 7
       VERTICAL ANALYSIS DETAILED OUTPUT
        Copyright by CivilTech Software
                www.civiltech.com
*****************************************************************
Licensed to
Date: 7/8/2019  File: P:\Geotechnical\2016 Geotechnical\16G136 Alston 2 CI Bldgs Long Beach\Deep Foundation Design\Apr 28 2016\Boring B-1\24india50ftdeep_01.alp                1.0

Title 1: 16G136 - 24-in-dia Drilled Pier
Title 2: 50-ft-deep; Using B-1 data

ALLPILE INPUT DATA:
**_____________________________________________________**

* Pile Type Page *
Unit: English
Concrete poured into drilled hole.  Diameter is limited to 24in (61cm).
Pile Type: Drilled Pile (dia <=24 in. or 61 cm)

* Pile Profile *
Foundation Depth: 50.0 -ft
Top Height: 0 -ft
Slope Angle: 0
Pile Angle: 0

* Pile Properties *
Zs      Width   Area    Perim.    I       E       Weight  Mix     Out     In      Other.  Type
-ft     -in     -in2    -in       -in4    -kp/i2  -kp/f   %       Side    Side    Par.
_____________________________________________________________________________________________
0.0     24      452.4   75.4      16286.0 3000    0.471   0.0     4       4       0       Concrete (smooth)
50.0                                                                                      Pile Tip
Note:  Mix = % of Inside material/Outside material

Group Type: 0
Top Type: 1

Water Table: 12 -ft
Ground Elevation: 0 -ft

* Soil Properties *
Zs      Gamma   Phi     C       K       E50/Dr  Nspt    Type    Soil
-ft     -lb/f3  o       -kp/f2  -lb/i3   - %
0.0     120.0   0.0     0.500   276.5   0.92    9       1       Fill
3.5     126.9   28      0.250   231.7   0.98    8       3       Alluvium
8.5     108.0   0.0     0.350   44.2    1.74    3       1       Alluvium
12.0    48.4    0.0     0.350   41.5    1.81    3       1       Alluvium
19.5    46.7    30      0.00    17.4    23.30   6       4       Alluvium
24.5    57.9    34      0.00    57.7    49.28   17      4       Alluvium
35.0    61.2    36      0.00    105.5   69.49   34      4       Alluvium

Surcharge Pressure on ground: 0 -kp/f2

* Zero Friction *
Zero Friction Start: 0 -ft      End: 3.5 -ft

* Negative Friction *
Negative Friction Start: 3.5 -ft        End: 32 -ft     with Factor: 1

ALLPILE ANALYSIS AND RESULTS:
**_____________________________________________________**

Pile Profile and Loading:
        Piletype: Drilled Pile (dia <=24 in. or 61 cm)
        Pile Length, L= 50.0 -ft
        Top Height, H= 0 -ft
        Slope Angle, As= 0
        Batter Angle, Ab= 0.00

Single Pile, Vertical Analysis:
        Vertical Load with Load factor, Q= 100.0 -kp
        Vertical Load with Load factor and Pile Cap, Q= 100.0 -kp
          Load Factor for Vertical Loads= 1.0
          Vertical Loads Supported by Pile Cap: 0 %
          Kdown= 0.7      Kup= 0.4        Ka= 1.00

At Ztip=50.0-ft  Soil Properties: Es= 543.94-kp/f2  C=0.00-kp/f2  Friction=36.00 Cp=0.135  Ksand=1.00
Limits of Max. tip resistance, q_lim= N/A
Batter Angle, Ab= 0.00    Batter Factor, Kbat= 1.00
Qtip_dw=278.4-kp  based on qult=88.6-kp/f2  and Base Area=3.1-ft2
Qtip_up=0.0-kp  and Base Area=0.0-ft2


TIP RESISTANCE (Down) CALCULATION:
Tip Depth= 50.0-ft Critical Depth Ratio Z/D= 20 Critical Depth= 40.0-ft
Equivalent Width of Tip= 2.00-ft,   Tip Area= 3.14-ft2   Tip Diameter= 2.00-ft
Bearing stratum from pile tip extending to 0 Diameter of pile. Bearing stratum= 0.00-ft
Btip: width at pile tip= 2.00-ft (For group pile, it is equivalent width).
Phi & C are average value in bearing stratum.
Batter Angle= 0.00,     Batter Factor for Tip and Side= 1.00

Ztip    Z/D     Z_lim   q_lim   Width   Area'   Phi     C       Nq      Nc      Sv      qult    Qtip_dw
-ft             -ft     -kp/f2  -ft     -ft2    - o     -kp/f2                          -kp/f2  -kp/f2  -kp
_____________________________________________________________________________________________________
50.0    20.0    40.0    N/A     2.00    3.14    36.0    0.00    30.1    9.0     2.9     88.6    278.4

 Ztip - Depth of pile tip from ground surface (Zs)
 D - Pile average diameter (below ground) for calculation of critical depth.  D=2.00-ft
 Z/D - Critical depth (for tip resistances) as ratio of depth/diameter. Vertical stress will be constant below critical depth
 Z_lim - Critical depth, calculated from Z/D (for tip resistances)
 q_lim -  Limit of Maximum tip resistance
 Btip: width or diameter at pile tip
 Bearing stratum: A stratum from  pile tip extending to some depth. Average soil properties in the stratum are used for bearing calculation


SIDE RESISTANCE (Uplift & Down) CALCULATION:
D       Z/D     Z_lim   Sf_lim  K_dw    K_up    dz
-ft             -ft     -kp/f2                  -ft
_____________________________________________________
2.00    20.0    40.00   N/A     0.7     0.4     0.100

 D - Pile average diameter for calculation of critical depth
 Z/D - Critical depth (for side resistances) as ratio of depth/diameter.  Vertical stress will be constant below critical depth
 Z_lim - Critical depth calculated from Z/D (for side resistances)
 Sf_lim - Limit of Maximum side resistance

Users Setting: Ka=1, which is constant.  Ca=KcKaC=KcC
```

SIDE RESISTANCE (Up & Down) CALCULATION vs DEPTH:
Calculation is based on segment dZ= 0.10

Zs -ft	Prem -ft	Sv -kp/f2	Phi - o	Kf(<2) Delta	Delta - o	f_dw -kp/f2	f_up -kp/f2	C -kp/f2	Ka	Kc(<2) Ca	Ca_dw -kp/f2	Ca_up -kp/f2	Sf_dw -kp/f2	Sf_up -kp/f2	Weight -kp	Qneg -kp	Q_dw -kp	Q_up -kp	Torsion -kp-f
50.00	6.28	2.95	36.0	0.70	25.2	0.97	0.56	0.00	1.00	1.00	0.00	0.00	0.00	0.00	0.00	0.00	278.4	0.0	0.0
49.90	6.28	2.95	36.0	0.70	25.2	0.97	0.56	0.00	1.00	1.00	0.00	0.00	0.97	0.56	0.03	0.00	279.0	0.4	0.5
49.80	6.28	2.95	36.0	0.70	25.2	0.97	0.56	0.00	1.00	1.00	0.00	0.00	0.97	0.56	0.06	0.00	279.6	0.8	1.0
49.70	6.28	2.95	36.0	0.70	25.2	0.97	0.56	0.00	1.00	1.00	0.00	0.00	0.97	0.56	0.08	0.00	280.2	1.1	1.4
49.60	6.28	2.95	36.0	0.70	25.2	0.97	0.56	0.00	1.00	1.00	0.00	0.00	0.97	0.56	0.11	0.00	280.8	1.5	1.9
49.50	6.28	2.95	36.0	0.70	25.2	0.97	0.56	0.00	1.00	1.00	0.00	0.00	0.97	0.56	0.14	0.00	281.4	1.9	2.4
49.40	6.28	2.95	36.0	0.70	25.2	0.97	0.56	0.00	1.00	1.00	0.00	0.00	0.97	0.56	0.17	0.00	282.1	2.3	2.9
49.30	6.28	2.95	36.0	0.70	25.2	0.97	0.56	0.00	1.00	1.00	0.00	0.00	0.97	0.56	0.19	0.00	282.7	2.6	3.4
49.20	6.28	2.95	36.0	0.70	25.2	0.97	0.56	0.00	1.00	1.00	0.00	0.00	0.97	0.56	0.22	0.00	283.3	3.0	3.8
49.10	6.28	2.95	36.0	0.70	25.2	0.97	0.56	0.00	1.00	1.00	0.00	0.00	0.97	0.56	0.25	0.00	283.9	3.4	4.3
49.00	6.28	2.95	36.0	0.70	25.2	0.97	0.56	0.00	1.00	1.00	0.00	0.00	0.97	0.56	0.28	0.00	284.5	3.8	4.8
48.90	6.28	2.95	36.0	0.70	25.2	0.97	0.56	0.00	1.00	1.00	0.00	0.00	0.97	0.56	0.30	0.00	285.1	4.1	5.3
48.80	6.28	2.95	36.0	0.70	25.2	0.97	0.56	0.00	1.00	1.00	0.00	0.00	0.97	0.56	0.33	0.00	285.7	4.5	5.8
48.70	6.28	2.95	36.0	0.70	25.2	0.97	0.56	0.00	1.00	1.00	0.00	0.00	0.97	0.56	0.36	0.00	286.3	4.9	6.2
48.60	6.28	2.95	36.0	0.70	25.2	0.97	0.56	0.00	1.00	1.00	0.00	0.00	0.97	0.56	0.39	0.00	286.9	5.3	6.7
48.50	6.28	2.95	36.0	0.70	25.2	0.97	0.56	0.00	1.00	1.00	0.00	0.00	0.97	0.56	0.41	0.00	287.6	5.7	7.2
48.40	6.28	2.95	36.0	0.70	25.2	0.97	0.56	0.00	1.00	1.00	0.00	0.00	0.97	0.56	0.44	0.00	288.2	6.0	7.7
48.30	6.28	2.95	36.0	0.70	25.2	0.97	0.56	0.00	1.00	1.00	0.00	0.00	0.97	0.56	0.47	0.00	288.8	6.4	8.2
48.20	6.28	2.95	36.0	0.70	25.2	0.97	0.56	0.00	1.00	1.00	0.00	0.00	0.97	0.56	0.50	0.00	289.4	6.8	8.6
48.10	6.28	2.95	36.0	0.70	25.2	0.97	0.56	0.00	1.00	1.00	0.00	0.00	0.97	0.56	0.52	0.00	290.0	7.2	9.1
48.00	6.28	2.95	36.0	0.70	25.2	0.97	0.56	0.00	1.00	1.00	0.00	0.00	0.97	0.56	0.55	0.00	290.6	7.5	9.6
47.90	6.28	2.95	36.0	0.70	25.2	0.97	0.56	0.00	1.00	1.00	0.00	0.00	0.97	0.56	0.58	0.00	291.2	7.9	10.1
47.80	6.28	2.95	36.0	0.70	25.2	0.97	0.56	0.00	1.00	1.00	0.00	0.00	0.97	0.56	0.61	0.00	291.8	8.3	10.6
47.70	6.28	2.95	36.0	0.70	25.2	0.97	0.56	0.00	1.00	1.00	0.00	0.00	0.97	0.56	0.63	0.00	292.4	8.7	11.1
47.60	6.28	2.95	36.0	0.70	25.2	0.97	0.56	0.00	1.00	1.00	0.00	0.00	0.97	0.56	0.66	0.00	293.1	9.0	11.5
47.49	6.28	2.95	36.0	0.70	25.2	0.97	0.56	0.00	1.00	1.00	0.00	0.00	0.97	0.56	0.69	0.00	293.7	9.4	12.0
47.39	6.28	2.95	36.0	0.70	25.2	0.97	0.56	0.00	1.00	1.00	0.00	0.00	0.97	0.56	0.72	0.00	294.3	9.8	12.5
47.29	6.28	2.95	36.0	0.70	25.2	0.97	0.56	0.00	1.00	1.00	0.00	0.00	0.97	0.56	0.74	0.00	294.9	10.2	13.0
47.19	6.28	2.95	36.0	0.70	25.2	0.97	0.56	0.00	1.00	1.00	0.00	0.00	0.97	0.56	0.77	0.00	295.5	10.6	13.5
47.09	6.28	2.95	36.0	0.70	25.2	0.97	0.56	0.00	1.00	1.00	0.00	0.00	0.97	0.56	0.80	0.00	296.1	10.9	13.9
46.99	6.28	2.95	36.0	0.70	25.2	0.97	0.56	0.00	1.00	1.00	0.00	0.00	0.97	0.56	0.83	0.00	296.7	11.3	14.4
46.89	6.28	2.95	36.0	0.70	25.2	0.97	0.56	0.00	1.00	1.00	0.00	0.00	0.97	0.56	0.85	0.00	297.3	11.7	14.9
46.79	6.28	2.95	36.0	0.70	25.2	0.97	0.56	0.00	1.00	1.00	0.00	0.00	0.97	0.56	0.88	0.00	298.0	12.1	15.4
46.69	6.28	2.95	36.0	0.70	25.2	0.97	0.56	0.00	1.00	1.00	0.00	0.00	0.97	0.56	0.91	0.00	298.6	12.4	15.9
46.59	6.28	2.95	36.0	0.70	25.2	0.97	0.56	0.00	1.00	1.00	0.00	0.00	0.97	0.56	0.94	0.00	299.2	12.8	16.3
46.49	6.28	2.95	36.0	0.70	25.2	0.97	0.56	0.00	1.00	1.00	0.00	0.00	0.97	0.56	0.96	0.00	299.8	13.2	16.8
46.39	6.28	2.95	36.0	0.70	25.2	0.97	0.56	0.00	1.00	1.00	0.00	0.00	0.97	0.56	0.99	0.00	300.4	13.6	17.3
46.29	6.28	2.95	36.0	0.70	25.2	0.97	0.56	0.00	1.00	1.00	0.00	0.00	0.97	0.56	1.02	0.00	301.0	13.9	17.8
46.19	6.28	2.95	36.0	0.70	25.2	0.97	0.56	0.00	1.00	1.00	0.00	0.00	0.97	0.56	1.05	0.00	301.6	14.3	18.3
46.09	6.28	2.95	36.0	0.70	25.2	0.97	0.56	0.00	1.00	1.00	0.00	0.00	0.97	0.56	1.07	0.00	302.2	14.7	18.7
45.99	6.28	2.95	36.0	0.70	25.2	0.97	0.56	0.00	1.00	1.00	0.00	0.00	0.97	0.56	1.10	0.00	302.8	15.1	19.2
45.89	6.28	2.95	36.0	0.70	25.2	0.97	0.56	0.00	1.00	1.00	0.00	0.00	0.97	0.56	1.13	0.00	303.5	15.5	19.7
45.79	6.28	2.95	36.0	0.70	25.2	0.97	0.56	0.00	1.00	1.00	0.00	0.00	0.97	0.56	1.16	0.00	304.1	15.8	20.2
45.69	6.28	2.95	36.0	0.70	25.2	0.97	0.56	0.00	1.00	1.00	0.00	0.00	0.97	0.56	1.18	0.00	304.7	16.2	20.7
45.59	6.28	2.95	36.0	0.70	25.2	0.97	0.56	0.00	1.00	1.00	0.00	0.00	0.97	0.56	1.21	0.00	305.3	16.6	21.1
45.49	6.28	2.95	36.0	0.70	25.2	0.97	0.56	0.00	1.00	1.00	0.00	0.00	0.97	0.56	1.24	0.00	305.9	17.0	21.6
45.39	6.28	2.95	36.0	0.70	25.2	0.97	0.56	0.00	1.00	1.00	0.00	0.00	0.97	0.56	1.27	0.00	306.5	17.3	22.1
45.29	6.28	2.95	36.0	0.70	25.2	0.97	0.56	0.00	1.00	1.00	0.00	0.00	0.97	0.56	1.29	0.00	307.1	17.7	22.6
45.19	6.28	2.95	36.0	0.70	25.2	0.97	0.56	0.00	1.00	1.00	0.00	0.00	0.97	0.56	1.32	0.00	307.7	18.1	23.1
45.09	6.28	2.95	36.0	0.70	25.2	0.97	0.56	0.00	1.00	1.00	0.00	0.00	0.97	0.56	1.35	0.00	308.3	18.5	23.5
44.99	6.28	2.95	36.0	0.70	25.2	0.97	0.56	0.00	1.00	1.00	0.00	0.00	0.97	0.56	1.38	0.00	309.0	18.8	24.0
44.89	6.28	2.95	36.0	0.70	25.2	0.97	0.56	0.00	1.00	1.00	0.00	0.00	0.97	0.56	1.41	0.00	309.6	19.2	24.5
44.79	6.28	2.95	36.0	0.70	25.2	0.97	0.56	0.00	1.00	1.00	0.00	0.00	0.97	0.56	1.43	0.00	310.2	19.6	25.0
44.69	6.28	2.95	36.0	0.70	25.2	0.97	0.56	0.00	1.00	1.00	0.00	0.00	0.97	0.56	1.46	0.00	310.8	20.0	25.5
44.59	6.28	2.95	36.0	0.70	25.2	0.97	0.56	0.00	1.00	1.00	0.00	0.00	0.97	0.56	1.49	0.00	311.4	20.4	25.9
44.49	6.28	2.95	36.0	0.70	25.2	0.97	0.56	0.00	1.00	1.00	0.00	0.00	0.97	0.56	1.52	0.00	312.0	20.7	26.4
44.39	6.28	2.95	36.0	0.70	25.2	0.97	0.56	0.00	1.00	1.00	0.00	0.00	0.97	0.56	1.54	0.00	312.6	21.1	26.9
44.29	6.28	2.95	36.0	0.70	25.2	0.97	0.56	0.00	1.00	1.00	0.00	0.00	0.97	0.56	1.57	0.00	313.2	21.5	27.4
44.19	6.28	2.95	36.0	0.70	25.2	0.97	0.56	0.00	1.00	1.00	0.00	0.00	0.97	0.56	1.60	0.00	313.9	21.9	27.9
44.09	6.28	2.95	36.0	0.70	25.2	0.97	0.56	0.00	1.00	1.00	0.00	0.00	0.97	0.56	1.63	0.00	314.5	22.2	28.3
43.99	6.28	2.95	36.0	0.70	25.2	0.97	0.56	0.00	1.00	1.00	0.00	0.00	0.97	0.56	1.65	0.00	315.1	22.6	28.8
43.89	6.28	2.95	36.0	0.70	25.2	0.97	0.56	0.00	1.00	1.00	0.00	0.00	0.97	0.56	1.68	0.00	315.7	23.0	29.3
43.79	6.28	2.95	36.0	0.70	25.2	0.97	0.56	0.00	1.00	1.00	0.00	0.00	0.97	0.56	1.71	0.00	316.3	23.4	29.8
43.69	6.28	2.95	36.0	0.70	25.2	0.97	0.56	0.00	1.00	1.00	0.00	0.00	0.97	0.56	1.74	0.00	316.9	23.8	30.3
43.59	6.28	2.95	36.0	0.70	25.2	0.97	0.56	0.00	1.00	1.00	0.00	0.00	0.97	0.56	1.76	0.00	317.5	24.1	30.8
43.49	6.28	2.95	36.0	0.70	25.2	0.97	0.56	0.00	1.00	1.00	0.00	0.00	0.97	0.56	1.79	0.00	318.1	24.5	31.2
43.39	6.28	2.95	36.0	0.70	25.2	0.97	0.56	0.00	1.00	1.00	0.00	0.00	0.97	0.56	1.82	0.00	318.7	24.9	31.7
43.29	6.28	2.95	36.0	0.70	25.2	0.97	0.56	0.00	1.00	1.00	0.00	0.00	0.97	0.56	1.85	0.00	319.4	25.3	32.2
43.19	6.28	2.95	36.0	0.70	25.2	0.97	0.56	0.00	1.00	1.00	0.00	0.00	0.97	0.56	1.87	0.00	320.0	25.6	32.7
43.09	6.28	2.95	36.0	0.70	25.2	0.97	0.56	0.00	1.00	1.00	0.00	0.00	0.97	0.56	1.90	0.00	320.6	26.0	33.2
42.99	6.28	2.95	36.0	0.70	25.2	0.97	0.56	0.00	1.00	1.00	0.00	0.00	0.97	0.56	1.93	0.00	321.2	26.4	33.6
42.89	6.28	2.95	36.0	0.70	25.2	0.97	0.56	0.00	1.00	1.00	0.00	0.00	0.97	0.56	1.96	0.00	321.8	26.8	34.1
42.79	6.28	2.95	36.0	0.70	25.2	0.97	0.56	0.00	1.00	1.00	0.00	0.00	0.97	0.56	1.98	0.00	322.4	27.1	34.6
42.69	6.28	2.95	36.0	0.70	25.2	0.97	0.56	0.00	1.00	1.00	0.00	0.00	0.97	0.56	2.01	0.00	323.0	27.5	35.1
42.59	6.28	2.95	36.0	0.70	25.2	0.97	0.56	0.00	1.00	1.00	0.00	0.00	0.97	0.56	2.04	0.00	323.6	27.9	35.6
42.48	6.28	2.95	36.0	0.70	25.2	0.97	0.56	0.00	1.00	1.00	0.00	0.00	0.97	0.56	2.07	0.00	324.2	28.3	36.0
42.38	6.28	2.95	36.0	0.70	25.2	0.97	0.56	0.00	1.00	1.00	0.00	0.00	0.97	0.56	2.09	0.00	324.9	28.7	36.5
42.28	6.28	2.95	36.0	0.70	25.2	0.97	0.56	0.00	1.00	1.00	0.00	0.00	0.97	0.56	2.12	0.00	325.5	29.0	37.0
42.18	6.28	2.95	36.0	0.70	25.2	0.97	0.56	0.00	1.00	1.00	0.00	0.00	0.97	0.56	2.15	0.00	326.1	29.4	37.5
42.08	6.28	2.95	36.0	0.70	25.2	0.97	0.56	0.00	1.00	1.00	0.00	0.00	0.97	0.56	2.18	0.00	326.7	29.8	38.0
41.98	6.28	2.95	36.0	0.70	25.2	0.97	0.56	0.00	1.00	1.00	0.00	0.00	0.97	0.56	2.20	0.00	327.3	30.2	38.4
41.88	6.28	2.95	36.0	0.70	25.2	0.97	0.56	0.00	1.00	1.00	0.00	0.00	0.97	0.56	2.23	0.00	327.9	30.5	38.9
41.78	6.28	2.95	36.0	0.70	25.2	0.97	0.56	0.00	1.00	1.00	0.00	0.00	0.97	0.56	2.26	0.00	328.5	30.9	39.4
41.68	6.28	2.95	36.0	0.70	25.2	0.97	0.56	0.00	1.00	1.00	0.00	0.00	0.97	0.56	2.29	0.00	329.1	31.3	39.9
41.58	6.28	2.95	36.0	0.70	25.2	0.97	0.56	0.00	1.00	1.00	0.00	0.00	0.97	0.56	2.31	0.00	329.8	31.7	40.4
41.48	6.28	2.95	36.0	0.70	25.2	0.97	0.56	0.00	1.00	1.00	0.00	0.00	0.97	0.56	2.34	0.00	330.4	32.0	40.8
41.38	6.28	2.95	36.0	0.70	25.2	0.97	0.56	0.00	1.00	1.00	0.00	0.00	0.97	0.56	2.37	0.00	331.0	32.4	41.3
41.28	6.28	2.95	36.0	0.70	25.2	0.97	0.56	0.00	1.00	1.00	0.00	0.00	0.97	0.56	2.40	0.00	331.6	32.8	41.8
41.18	6.28	2.95	36.0	0.70	25.2	0.97	0.56	0.00	1.00	1.00	0.00	0.00	0.97	0.56	2.42	0.00	332.2	33.2	42.3
41.08	6.28	2.95	36.0	0.70	25.2	0.97	0.56	0.00	1.00	1.00	0.00	0.00	0.97	0.56	2.45	0.00	332.8	33.6	42.8
40.98	6.28	2.95	36.0	0.70	25.2	0.97	0.56	0.00	1.00	1.00	0.00	0.00	0.97	0.56	2.48	0.00	333.4	33.9	43.2
40.88	6.28	2.95	36.0	0.70	25.2	0.97	0.56	0.00	1.00	1.00	0.00	0.00	0.97	0.56	2.51	0.00	334.0	34.3	43.7
40.78	6.28	2.95	36.0	0.70	25.2	0.97	0.56	0.00	1.00	1.00	0.00	0.00	0.97	0.56	2.53	0.00	334.6	34.7	44.2
40.68	6.28	2.95	36.0	0.70	25.2	0.97	0.56	0.00	1.00	1.00	0.00	0.00	0.97	0.56	2.56	0.00	335.3	35.1	44.7
40.58	6.28	2.95	36.0	0.70	25.2	0.97	0.56	0.00	1.00	1.00	0.00	0.00	0.97	0.56	2.59	0.00	335.9	35.4	45.2
40.48	6.28	2.95	36.0	0.70	25.2	0.97	0.56	0.00	1.00	1.00	0.00	0.00	0.97	0.56	2.62	0.00	336.5	35.8	45.6
40.38	6.28	2.95	36.0	0.70	25.2	0.97	0.56	0.00	1.00	1.00	0.00	0.00	0.97	0.56	2.64	0.00	337.1	36.2	46.1
40.28	6.28	2.95	36.0	0.70	25.2	0.97	0.56	0.00	1.00	1.00	0.00	0.00	0.97	0.56	2.67	0.00	337.7	36.6	46.6
40.18	6.28	2.95	36.0	0.70	25.2	0.97	0.56	0.00	1.00	1.00	0.00	0.00	0.97	0.56	2.70	0.00	338.3	36.9	47.1
40.08	6.28	2.95	36.0	0.70	25.2	0.97	0.56	0.00	1.00	1.00	0.00	0.00	0.97	0.56	2.73	0.00	338.9	37.3	47.6
39.98	6.28	2.95	36.0	0.70	25.2	0.97	0.56	0.00	1.00	1.00	0.00	0.00	0.97	0.56	2.76	0.00	339.5	37.7	48.0
39.88	6.28	2.94	36.0	0.70	25.2	0.97	0.55	0.00	1.00	1.00	0.00	0.00	0.97	0.55	2.78	0.00	340.1	38.1	48.5
39.78	6.28	2.94	36.0	0.70	25.2	0.97	0.55	0.00	1.00	1.00	0.00	0.00	0.97	0.55	2.81	0.00	340.8	38.5	49.0
39.68	6.28	2.93	36.0	0.70	25.2	0.97	0.55	0.00	1.00	1.00	0.00	0.00	0.97	0.55	2.84	0.00	341.4	38.8	49.5
39.58	6.28	2.92	36.0	0.70	25.2	0.96	0.55	0.00	1.00	1.00	0.00	0.00	0.96	0.55	2.87	0.00	342.0	39.2	50.0
39.48	6.28	2.92	36.0	0.70	25.2	0.96	0.55	0.00	1.00	1.00	0.00	0.00	0.96	0.55	2.89	0.00	342.6	39.6	50.4
39.38	6.28	2.91	36.0	0.70	25.2	0.96	0.55	0.00	1.00	1.00	0.00	0.00	0.96	0.55	2.92	0.00	343.2	39.9	50.9
39.28	6.28	2.91	36.0	0.70	25.2	0.96	0.55	0.00	1.00	1.00	0.00	0.00	0.96	0.55	2.95	0.00	343.8	40.3	51.4
39.18	6.28	2.90	36.0	0.70	25.2	0.96	0.55	0.00	1.00	1.00	0.00	0.00	0.96	0.55	2.98	0.00	344.4	40.7	51.9
39.08	6.28	2.89	36.0	0.70	25.2	0.95	0.54	0.00	1.00	1.00	0.00	0.00	0.95	0.54	3.00	0.00	345.0	41.1	52.3

38.98	6.28	2.89	36.0	0.70	25.2	0.95	0.54	0.00	1.00	1.00	0.00	0.00	0.95	0.54	3.03	0.00	345.6	41.4	52.8
38.88	6.28	2.88	36.0	0.70	25.2	0.95	0.54	0.00	1.00	1.00	0.00	0.00	0.95	0.54	3.06	0.00	346.2	41.8	53.3
38.78	6.28	2.88	36.0	0.70	25.2	0.95	0.54	0.00	1.00	1.00	0.00	0.00	0.95	0.54	3.09	0.00	346.8	42.2	53.7
38.68	6.28	2.87	36.0	0.70	25.2	0.95	0.54	0.00	1.00	1.00	0.00	0.00	0.95	0.54	3.11	0.00	347.4	42.5	54.2
38.58	6.28	2.86	36.0	0.70	25.2	0.94	0.54	0.00	1.00	1.00	0.00	0.00	0.94	0.54	3.14	0.00	348.0	42.9	54.7
38.48	6.28	2.86	36.0	0.70	25.2	0.94	0.54	0.00	1.00	1.00	0.00	0.00	0.94	0.54	3.17	0.00	348.6	43.3	55.1
38.38	6.28	2.85	36.0	0.70	25.2	0.94	0.54	0.00	1.00	1.00	0.00	0.00	0.94	0.54	3.20	0.00	349.1	43.6	55.6
38.28	6.28	2.84	36.0	0.70	25.2	0.94	0.54	0.00	1.00	1.00	0.00	0.00	0.94	0.54	3.22	0.00	349.7	44.0	56.1
38.18	6.28	2.84	36.0	0.70	25.2	0.93	0.53	0.00	1.00	1.00	0.00	0.00	0.93	0.53	3.25	0.00	350.3	44.4	56.5
38.08	6.28	2.83	36.0	0.70	25.2	0.93	0.53	0.00	1.00	1.00	0.00	0.00	0.93	0.53	3.28	0.00	350.9	44.7	57.0
37.98	6.28	2.83	36.0	0.70	25.2	0.93	0.53	0.00	1.00	1.00	0.00	0.00	0.93	0.53	3.31	0.00	351.5	45.1	57.4
37.88	6.28	2.82	36.0	0.70	25.2	0.93	0.53	0.00	1.00	1.00	0.00	0.00	0.93	0.53	3.33	0.00	352.1	45.4	57.9
37.78	6.28	2.81	36.0	0.70	25.2	0.93	0.53	0.00	1.00	1.00	0.00	0.00	0.93	0.53	3.36	0.00	352.7	45.8	58.4
37.68	6.28	2.81	36.0	0.70	25.2	0.92	0.53	0.00	1.00	1.00	0.00	0.00	0.92	0.53	3.39	0.00	353.3	46.2	58.8
37.58	6.28	2.80	36.0	0.70	25.2	0.92	0.53	0.00	1.00	1.00	0.00	0.00	0.92	0.53	3.42	0.00	353.8	46.5	59.3
37.47	6.28	2.80	36.0	0.70	25.2	0.92	0.53	0.00	1.00	1.00	0.00	0.00	0.92	0.53	3.44	0.00	354.4	46.9	59.7
37.37	6.28	2.79	36.0	0.70	25.2	0.92	0.53	0.00	1.00	1.00	0.00	0.00	0.92	0.53	3.47	0.00	355.0	47.2	60.2
37.27	6.28	2.78	36.0	0.70	25.2	0.92	0.52	0.00	1.00	1.00	0.00	0.00	0.92	0.52	3.50	0.00	355.6	47.6	60.6
37.17	6.28	2.78	36.0	0.70	25.2	0.91	0.52	0.00	1.00	1.00	0.00	0.00	0.91	0.52	3.53	0.00	356.1	48.0	61.1
37.07	6.28	2.77	36.0	0.70	25.2	0.91	0.52	0.00	1.00	1.00	0.00	0.00	0.91	0.52	3.55	0.00	356.7	48.3	61.5
36.97	6.28	2.76	36.0	0.70	25.2	0.91	0.52	0.00	1.00	1.00	0.00	0.00	0.91	0.52	3.58	0.00	357.3	48.7	62.0
36.87	6.28	2.76	36.0	0.70	25.2	0.91	0.52	0.00	1.00	1.00	0.00	0.00	0.91	0.52	3.61	0.00	357.9	49.0	62.4
36.77	6.28	2.75	36.0	0.70	25.2	0.91	0.52	0.00	1.00	1.00	0.00	0.00	0.91	0.52	3.64	0.00	358.4	49.4	62.9
36.67	6.28	2.75	36.0	0.70	25.2	0.90	0.52	0.00	1.00	1.00	0.00	0.00	0.90	0.52	3.66	0.00	359.0	49.7	63.3
36.57	6.28	2.74	36.0	0.70	25.2	0.90	0.52	0.00	1.00	1.00	0.00	0.00	0.90	0.52	3.69	0.00	359.6	50.1	63.8
36.47	6.28	2.73	36.0	0.70	25.2	0.90	0.51	0.00	1.00	1.00	0.00	0.00	0.90	0.51	3.72	0.00	360.1	50.4	64.2
36.37	6.28	2.73	36.0	0.70	25.2	0.90	0.51	0.00	1.00	1.00	0.00	0.00	0.90	0.51	3.75	0.00	360.7	50.8	64.7
36.27	6.28	2.72	36.0	0.70	25.2	0.90	0.51	0.00	1.00	1.00	0.00	0.00	0.90	0.51	3.77	0.00	361.3	51.1	65.1
36.17	6.28	2.72	36.0	0.70	25.2	0.89	0.51	0.00	1.00	1.00	0.00	0.00	0.89	0.51	3.80	0.00	361.8	51.5	65.6
36.07	6.28	2.71	36.0	0.70	25.2	0.89	0.51	0.00	1.00	1.00	0.00	0.00	0.89	0.51	3.83	0.00	362.4	51.8	66.0
35.97	6.28	2.70	36.0	0.70	25.2	0.89	0.51	0.00	1.00	1.00	0.00	0.00	0.89	0.51	3.86	0.00	363.0	52.2	66.4
35.87	6.28	2.70	36.0	0.70	25.2	0.89	0.51	0.00	1.00	1.00	0.00	0.00	0.89	0.51	3.88	0.00	363.5	52.5	66.9
35.77	6.28	2.69	36.0	0.70	25.2	0.89	0.51	0.00	1.00	1.00	0.00	0.00	0.89	0.51	3.91	0.00	364.1	52.9	67.3
35.67	6.28	2.69	36.0	0.70	25.2	0.88	0.51	0.00	1.00	1.00	0.00	0.00	0.88	0.51	3.94	0.00	364.6	53.2	67.8
35.57	6.28	2.68	36.0	0.70	25.2	0.88	0.50	0.00	1.00	1.00	0.00	0.00	0.88	0.50	3.97	0.00	365.2	53.6	68.2
35.47	6.28	2.67	36.0	0.70	25.2	0.88	0.50	0.00	1.00	1.00	0.00	0.00	0.88	0.50	3.99	0.00	365.7	53.9	68.6
35.37	6.28	2.67	36.0	0.70	25.2	0.88	0.50	0.00	1.00	1.00	0.00	0.00	0.88	0.50	4.02	0.00	366.3	54.3	69.1
35.27	6.28	2.66	36.0	0.70	25.2	0.88	0.50	0.00	1.00	1.00	0.00	0.00	0.88	0.50	4.05	0.00	366.8	54.6	69.5
35.17	6.28	2.65	36.0	0.70	25.2	0.87	0.50	0.00	1.00	1.00	0.00	0.00	0.87	0.50	4.08	0.00	367.4	54.9	69.9
35.07	6.28	2.65	36.0	0.70	25.2	0.87	0.50	0.00	1.00	1.00	0.00	0.00	0.87	0.50	4.11	0.00	367.9	55.3	70.4
34.97	6.28	2.64	34.0	0.70	23.8	0.82	0.47	0.00	1.00	1.00	0.00	0.00	0.82	0.47	4.13	0.00	368.5	55.6	70.8
34.87	6.28	2.64	34.0	0.70	23.8	0.81	0.47	0.00	1.00	1.00	0.00	0.00	0.81	0.47	4.16	0.00	369.0	55.9	71.2
34.77	6.28	2.63	34.0	0.70	23.8	0.81	0.46	0.00	1.00	1.00	0.00	0.00	0.81	0.46	4.19	0.00	369.5	56.2	71.6
34.67	6.28	2.63	34.0	0.70	23.8	0.81	0.46	0.00	1.00	1.00	0.00	0.00	0.81	0.46	4.22	0.00	370.0	56.6	72.0
34.57	6.28	2.62	34.0	0.70	23.8	0.81	0.46	0.00	1.00	1.00	0.00	0.00	0.81	0.46	4.24	0.00	370.5	56.9	72.4
34.47	6.28	2.61	34.0	0.70	23.8	0.81	0.46	0.00	1.00	1.00	0.00	0.00	0.81	0.46	4.27	0.00	371.0	57.2	72.8
34.37	6.28	2.61	34.0	0.70	23.8	0.81	0.46	0.00	1.00	1.00	0.00	0.00	0.81	0.46	4.30	0.00	371.5	57.5	73.2
34.27	6.28	2.60	34.0	0.70	23.8	0.80	0.46	0.00	1.00	1.00	0.00	0.00	0.80	0.46	4.33	0.00	372.0	57.8	73.6
34.17	6.28	2.60	34.0	0.70	23.8	0.80	0.46	0.00	1.00	1.00	0.00	0.00	0.80	0.46	4.35	0.00	372.5	58.1	74.0
34.07	6.28	2.59	34.0	0.70	23.8	0.80	0.46	0.00	1.00	1.00	0.00	0.00	0.80	0.46	4.38	0.00	373.0	58.5	74.4
33.97	6.28	2.58	34.0	0.70	23.8	0.80	0.46	0.00	1.00	1.00	0.00	0.00	0.80	0.46	4.41	0.00	373.5	58.8	74.8
33.87	6.28	2.58	34.0	0.70	23.8	0.80	0.45	0.00	1.00	1.00	0.00	0.00	0.80	0.45	4.44	0.00	374.0	59.1	75.2
33.77	6.28	2.57	34.0	0.70	23.8	0.79	0.45	0.00	1.00	1.00	0.00	0.00	0.79	0.45	4.46	0.00	374.5	59.4	75.5
33.67	6.28	2.57	34.0	0.70	23.8	0.79	0.45	0.00	1.00	1.00	0.00	0.00	0.79	0.45	4.49	0.00	375.0	59.7	75.9
33.57	6.28	2.56	34.0	0.70	23.8	0.79	0.45	0.00	1.00	1.00	0.00	0.00	0.79	0.45	4.52	0.00	375.5	60.0	76.3
33.47	6.28	2.56	34.0	0.70	23.8	0.79	0.45	0.00	1.00	1.00	0.00	0.00	0.79	0.45	4.55	0.00	376.0	60.3	76.7
33.37	6.28	2.55	34.0	0.70	23.8	0.79	0.45	0.00	1.00	1.00	0.00	0.00	0.79	0.45	4.57	0.00	376.5	60.7	77.1
33.27	6.28	2.54	34.0	0.70	23.8	0.79	0.45	0.00	1.00	1.00	0.00	0.00	0.79	0.45	4.60	0.00	377.0	61.0	77.5
33.17	6.28	2.54	34.0	0.70	23.8	0.78	0.45	0.00	1.00	1.00	0.00	0.00	0.78	0.45	4.63	0.00	377.5	61.3	77.9
33.07	6.28	2.53	34.0	0.70	23.8	0.78	0.45	0.00	1.00	1.00	0.00	0.00	0.78	0.45	4.66	0.00	378.0	61.6	78.3
32.97	6.28	2.53	34.0	0.70	23.8	0.78	0.45	0.00	1.00	1.00	0.00	0.00	0.78	0.45	4.68	0.00	378.5	61.9	78.7
32.87	6.28	2.52	34.0	0.70	23.8	0.78	0.44	0.00	1.00	1.00	0.00	0.00	0.78	0.44	4.71	0.00	379.0	62.2	79.0
32.77	6.28	2.51	34.0	0.70	23.8	0.78	0.44	0.00	1.00	1.00	0.00	0.00	0.78	0.44	4.74	0.00	379.5	62.5	79.4
32.67	6.28	2.51	34.0	0.70	23.8	0.77	0.44	0.00	1.00	1.00	0.00	0.00	0.77	0.44	4.77	0.00	380.0	62.8	79.8
32.57	6.28	2.50	34.0	0.70	23.8	0.77	0.44	0.00	1.00	1.00	0.00	0.00	0.77	0.44	4.79	0.00	380.4	63.1	80.2
32.46	6.28	2.50	34.0	0.70	23.8	0.77	0.44	0.00	1.00	1.00	0.00	0.00	0.77	0.44	4.82	0.00	380.9	63.4	80.6
32.36	6.28	2.49	34.0	0.70	23.8	0.77	0.44	0.00	1.00	1.00	0.00	0.00	0.77	0.44	4.85	0.00	381.4	63.7	81.0
32.26	6.28	2.49	34.0	0.70	23.8	0.77	0.44	0.00	1.00	1.00	0.00	0.00	0.77	0.44	4.88	0.00	381.9	64.0	81.3
32.16	6.28	2.48	34.0	0.70	23.8	0.77	0.44	0.00	1.00	1.00	0.00	0.00	0.77	0.44	4.90	0.00	382.4	64.3	81.7
32.06	6.28	2.47	34.0	0.70	23.8	0.76	0.44	0.00	1.00	1.00	0.00	0.00	0.76	0.44	4.93	0.00	382.9	64.6	82.1
31.96	6.28	2.47	34.0	0.70	23.8	-0.76	0.44	0.00	1.00	1.00	0.00	0.00	-0.76	0.44	4.96	-0.48	382.4	64.9	82.0
31.86	6.28	2.46	34.0	0.70	23.8	-0.76	0.43	0.00	1.00	1.00	0.00	0.00	-0.76	0.43	4.99	-0.96	381.9	65.2	81.9
31.76	6.28	2.46	34.0	0.70	23.8	-0.76	0.43	0.00	1.00	1.00	0.00	0.00	-0.76	0.43	5.01	-1.44	381.4	65.5	81.8
31.66	6.28	2.45	34.0	0.70	23.8	-0.76	0.43	0.00	1.00	1.00	0.00	0.00	-0.76	0.43	5.04	-1.91	380.9	65.8	81.7
31.56	6.28	2.45	34.0	0.70	23.8	-0.75	0.43	0.00	1.00	1.00	0.00	0.00	-0.75	0.43	5.07	-2.39	380.5	66.1	81.6
31.46	6.28	2.44	34.0	0.70	23.8	-0.75	0.43	0.00	1.00	1.00	0.00	0.00	-0.75	0.43	5.10	-2.86	380.0	66.4	81.5
31.36	6.28	2.43	34.0	0.70	23.8	-0.75	0.43	0.00	1.00	1.00	0.00	0.00	-0.75	0.43	5.12	-3.33	379.5	66.7	81.4
31.26	6.28	2.43	34.0	0.70	23.8	-0.75	0.43	0.00	1.00	1.00	0.00	0.00	-0.75	0.43	5.15	-3.81	379.1	67.0	81.3
31.16	6.28	2.42	34.0	0.70	23.8	-0.75	0.43	0.00	1.00	1.00	0.00	0.00	-0.75	0.43	5.18	-4.28	378.6	67.3	81.2
31.06	6.28	2.42	34.0	0.70	23.8	-0.75	0.43	0.00	1.00	1.00	0.00	0.00	-0.75	0.43	5.21	-4.75	378.1	67.6	81.1
30.96	6.28	2.41	34.0	0.70	23.8	-0.74	0.43	0.00	1.00	1.00	0.00	0.00	-0.74	0.43	5.23	-5.22	377.6	67.9	81.0
30.86	6.28	2.40	34.0	0.70	23.8	-0.74	0.42	0.00	1.00	1.00	0.00	0.00	-0.74	0.42	5.26	-5.68	377.2	68.2	80.9
30.76	6.28	2.40	34.0	0.70	23.8	-0.74	0.42	0.00	1.00	1.00	0.00	0.00	-0.74	0.42	5.29	-6.15	376.7	68.5	80.8
30.66	6.28	2.39	34.0	0.70	23.8	-0.74	0.42	0.00	1.00	1.00	0.00	0.00	-0.74	0.42	5.32	-6.61	376.2	68.8	80.7
30.56	6.28	2.39	34.0	0.70	23.8	-0.74	0.42	0.00	1.00	1.00	0.00	0.00	-0.74	0.42	5.34	-7.08	375.8	69.1	80.6
30.46	6.28	2.38	34.0	0.70	23.8	-0.74	0.42	0.00	1.00	1.00	0.00	0.00	-0.74	0.42	5.37	-7.54	375.3	69.4	80.5
30.36	6.28	2.38	34.0	0.70	23.8	-0.73	0.42	0.00	1.00	1.00	0.00	0.00	-0.73	0.42	5.40	-8.00	374.9	69.7	80.4
30.26	6.28	2.37	34.0	0.70	23.8	-0.73	0.42	0.00	1.00	1.00	0.00	0.00	-0.73	0.42	5.43	-8.46	374.4	70.0	80.3
30.16	6.28	2.36	34.0	0.70	23.8	-0.73	0.42	0.00	1.00	1.00	0.00	0.00	-0.73	0.42	5.46	-8.92	373.9	70.3	80.2
30.06	6.28	2.36	34.0	0.70	23.8	-0.73	0.42	0.00	1.00	1.00	0.00	0.00	-0.73	0.42	5.48	-9.38	373.5	70.5	80.1
29.96	6.28	2.35	34.0	0.70	23.8	-0.73	0.42	0.00	1.00	1.00	0.00	0.00	-0.73	0.42	5.51	-9.84	373.0	70.8	80.0
29.86	6.28	2.35	34.0	0.70	23.8	-0.72	0.41	0.00	1.00	1.00	0.00	0.00	-0.72	0.41	5.54	-10.30	372.6	71.1	79.9
29.76	6.28	2.34	34.0	0.70	23.8	-0.72	0.41	0.00	1.00	1.00	0.00	0.00	-0.72	0.41	5.57	-10.75	372.1	71.4	79.8
29.66	6.28	2.33	34.0	0.70	23.8	-0.72	0.41	0.00	1.00	1.00	0.00	0.00	-0.72	0.41	5.59	-11.20	371.7	71.7	79.7
29.56	6.28	2.33	34.0	0.70	23.8	-0.72	0.41	0.00	1.00	1.00	0.00	0.00	-0.72	0.41	5.62	-11.66	371.2	72.0	79.6
29.46	6.28	2.32	34.0	0.70	23.8	-0.72	0.41	0.00	1.00	1.00	0.00	0.00	-0.72	0.41	5.65	-12.11	370.8	72.3	79.5
29.36	6.28	2.32	34.0	0.70	23.8	-0.72	0.41	0.00	1.00	1.00	0.00	0.00	-0.72	0.41	5.68	-12.56	370.3	72.6	79.4
29.26	6.28	2.31	34.0	0.70	23.8	-0.71	0.41	0.00	1.00	1.00	0.00	0.00	-0.71	0.41	5.70	-13.01	369.9	72.8	79.3
29.16	6.28	2.31	34.0	0.70	23.8	-0.71	0.41	0.00	1.00	1.00	0.00	0.00	-0.71	0.41	5.73	-13.46	369.4	73.1	79.2
29.06	6.28	2.30	34.0	0.70	23.8	-0.71	0.41	0.00	1.00	1.00	0.00	0.00	-0.71	0.41	5.76	-13.90	369.0	73.4	79.1
28.96	6.28	2.29	34.0	0.70	23.8	-0.71	0.40	0.00	1.00	1.00	0.00	0.00	-0.71	0.40	5.79	-14.35	368.5	73.7	79.0
28.86	6.28	2.29	34.0	0.70	23.8	-0.71	0.40	0.00	1.00	1.00	0.00	0.00	-0.71	0.40	5.81	-14.79	368.1	74.0	78.9
28.76	6.28	2.28	34.0	0.70	23.8	-0.70	0.40	0.00	1.00	1.00	0.00	0.00	-0.70	0.40	5.84	-15.24	367.6	74.2	78.8
28.66	6.28	2.28	34.0	0.70	23.8	-0.70	0.40	0.00	1.00	1.00	0.00	0.00	-0.70	0.40	5.87	-15.68	367.2	74.5	78.7
28.56	6.28	2.27	34.0	0.70	23.8	-0.70	0.40	0.00	1.00	1.00	0.00	0.00	-0.70	0.40	5.90	-16.12	366.7	74.8	78.6
28.46	6.28	2.27	34.0	0.70	23.8	-0.70	0.40	0.00	1.00	1.00	0.00	0.00	-0.70	0.40	5.92	-16.56	366.3	75.1	78.5
28.36	6.28	2.26	34.0	0.70	23.8	-0.70	0.40	0.00	1.00	1.00	0.00	0.00	-0.70	0.40	5.95	-17.00	365.9	75.4	78.4
28.26	6.28	2.25	34.0	0.70	23.8	-0.70	0.40	0.00	1.00	1.00	0.00	0.00	-0.70	0.40	5.98	-17.44	365.4	75.6	78.4
28.16	6.28	2.25	34.0	0.70	23.8	-0.69	0.40	0.00	1.00	1.00	0.00	0.00	-0.69	0.40	6.01	-17.88	365.0	75.9	78.3
28.06	6.28	2.24	34.0	0.70	23.8	-0.69	0.40	0.00	1.00	1.00	0.00	0.00	-0.69	0.40	6.03	-18.31	364.5	76.2	78.2
27.96	6.28	2.24	34.0	0.70	23.8	-0.69	0.39	0.00	1.00	1.00	0.00	0.00	-0.69	0.39	6.06	-18.75	364.1	76.5	78.1
27.86	6.28	2.23	34.0	0.70	23.8	-0.69	0.39	0.00	1.00	1.00	0.00	0.00	-0.69	0.39	6.09	-19.18	363.7	76.8	78.0
27.76	6.28	2.22	34.0	0.70	23.8	-0.69	0.39	0.00	1.00	1.00	0.00	0.00	-0.69	0.39	6.12	-19.61	363.2	77.0	77.9
27.66	6.28	2.22	34.0	0.70	23.8	-0.69	0.39	0.00	1.00	1.00	0.00	0.00	-0.69	0.39	6.14	-20.04	362.8	77.3	77.8
27.56	6.28	2.21	34.0	0.70	23.8	-0.68	0.39	0.00	1.00	1.00	0.00	0.00	-0.68	0.39	6.17	-20.47	362.4	77.6	77.7
27.45	6.28	2.21	34.0	0.70	23.8	-0.68	0.39	0.00	1.00	1.00	0.00	0.00	-0.68	0.39	6.20	-20.90	362.0	77.8	77.6
27.35	6.28	2.20	34.0	0.70	23.8	-0.68	0.39	0.00	1.00	1.00	0.00	0.00	-0.68	0.39	6.23	-21.33	361.5	78.1	77.5

27.25	6.28	2.20	34.0	0.70	23.8	-0.68	0.39	0.00	1.00	1.00	0.00	0.00	-0.68	0.39	6.25	-21.76	361.1	78.4	77.4
27.15	6.28	2.19	34.0	0.70	23.8	-0.68	0.39	0.00	1.00	1.00	0.00	0.00	-0.68	0.39	6.28	-22.18	360.7	78.7	77.3
27.05	6.28	2.18	34.0	0.70	23.8	-0.67	0.39	0.00	1.00	1.00	0.00	0.00	-0.67	0.39	6.31	-22.61	360.3	78.9	77.2
26.95	6.28	2.18	34.0	0.70	23.8	-0.67	0.38	0.00	1.00	1.00	0.00	0.00	-0.67	0.38	6.34	-23.03	359.8	79.2	77.2
26.85	6.28	2.17	34.0	0.70	23.8	-0.67	0.38	0.00	1.00	1.00	0.00	0.00	-0.67	0.38	6.36	-23.45	359.4	79.5	77.1
26.75	6.28	2.17	34.0	0.70	23.8	-0.67	0.38	0.00	1.00	1.00	0.00	0.00	-0.67	0.38	6.39	-23.88	359.0	79.7	77.0
26.65	6.28	2.16	34.0	0.70	23.8	-0.67	0.38	0.00	1.00	1.00	0.00	0.00	-0.67	0.38	6.42	-24.30	358.6	80.0	76.9
26.55	6.28	2.16	34.0	0.70	23.8	-0.67	0.38	0.00	1.00	1.00	0.00	0.00	-0.67	0.38	6.45	-24.71	358.1	80.3	76.8
26.45	6.28	2.15	34.0	0.70	23.8	-0.66	0.38	0.00	1.00	1.00	0.00	0.00	-0.66	0.38	6.47	-25.13	357.7	80.5	76.7
26.35	6.28	2.14	34.0	0.70	23.8	-0.66	0.38	0.00	1.00	1.00	0.00	0.00	-0.66	0.38	6.50	-25.55	357.3	80.8	76.6
26.25	6.28	2.14	34.0	0.70	23.8	-0.66	0.38	0.00	1.00	1.00	0.00	0.00	-0.66	0.38	6.53	-25.96	356.9	81.1	76.5
26.15	6.28	2.13	34.0	0.70	23.8	-0.66	0.38	0.00	1.00	1.00	0.00	0.00	-0.66	0.38	6.56	-26.38	356.5	81.3	76.4
26.05	6.28	2.13	34.0	0.70	23.8	-0.66	0.38	0.00	1.00	1.00	0.00	0.00	-0.66	0.38	6.58	-26.79	356.1	81.6	76.4
25.95	6.28	2.12	34.0	0.70	23.8	-0.65	0.37	0.00	1.00	1.00	0.00	0.00	-0.65	0.37	6.61	-27.20	355.7	81.9	76.3
25.85	6.28	2.11	34.0	0.70	23.8	-0.65	0.37	0.00	1.00	1.00	0.00	0.00	-0.65	0.37	6.64	-27.62	355.2	82.1	76.2
25.75	6.28	2.11	34.0	0.70	23.8	-0.65	0.37	0.00	1.00	1.00	0.00	0.00	-0.65	0.37	6.67	-28.03	354.8	82.4	76.1
25.65	6.28	2.10	34.0	0.70	23.8	-0.65	0.37	0.00	1.00	1.00	0.00	0.00	-0.65	0.37	6.69	-28.43	354.4	82.6	76.0
25.55	6.28	2.10	34.0	0.70	23.8	-0.65	0.37	0.00	1.00	1.00	0.00	0.00	-0.65	0.37	6.72	-28.84	354.0	82.9	75.9
25.45	6.28	2.09	34.0	0.70	23.8	-0.65	0.37	0.00	1.00	1.00	0.00	0.00	-0.65	0.37	6.75	-29.25	353.6	83.2	75.8
25.35	6.28	2.09	34.0	0.70	23.8	-0.64	0.37	0.00	1.00	1.00	0.00	0.00	-0.64	0.37	6.78	-29.65	353.2	83.4	75.7
25.25	6.28	2.08	34.0	0.70	23.8	-0.64	0.37	0.00	1.00	1.00	0.00	0.00	-0.64	0.37	6.81	-30.06	352.8	83.7	75.7
25.15	6.28	2.07	34.0	0.70	23.8	-0.64	0.37	0.00	1.00	1.00	0.00	0.00	-0.64	0.37	6.83	-30.46	352.4	83.9	75.6
25.05	6.28	2.07	34.0	0.70	23.8	-0.64	0.36	0.00	1.00	1.00	0.00	0.00	-0.64	0.36	6.86	-30.86	352.0	84.2	75.5
24.95	6.28	2.06	34.0	0.70	23.8	-0.64	0.36	0.00	1.00	1.00	0.00	0.00	-0.64	0.36	6.89	-31.26	351.6	84.5	75.4
24.85	6.28	2.06	34.0	0.70	23.8	-0.63	0.36	0.00	1.00	1.00	0.00	0.00	-0.63	0.36	6.92	-31.66	351.2	84.7	75.3
24.75	6.28	2.05	34.0	0.70	23.8	-0.63	0.36	0.00	1.00	1.00	0.00	0.00	-0.63	0.36	6.94	-32.06	350.8	85.0	75.2
24.65	6.28	2.04	34.0	0.70	23.8	-0.63	0.36	0.00	1.00	1.00	0.00	0.00	-0.63	0.36	6.97	-32.46	350.4	85.2	75.1
24.55	6.28	2.04	34.0	0.70	23.8	-0.63	0.36	0.00	1.00	1.00	0.00	0.00	-0.63	0.36	7.00	-32.86	350.0	85.5	75.1
24.45	6.28	2.03	30.0	0.70	21.0	-0.55	0.31	0.00	1.00	1.00	0.00	0.00	-0.55	0.31	7.03	-33.20	349.7	85.7	75.0
24.35	6.28	2.03	30.0	0.70	21.0	-0.55	0.31	0.00	1.00	1.00	0.00	0.00	-0.55	0.31	7.05	-33.54	349.3	85.9	74.9
24.25	6.28	2.03	30.0	0.70	21.0	-0.54	0.31	0.00	1.00	1.00	0.00	0.00	-0.54	0.31	7.08	-33.89	349.0	86.1	74.8
24.15	6.28	2.02	30.0	0.70	21.0	-0.54	0.31	0.00	1.00	1.00	0.00	0.00	-0.54	0.31	7.11	-34.23	348.6	86.4	74.8
24.05	6.28	2.02	30.0	0.70	21.0	-0.54	0.31	0.00	1.00	1.00	0.00	0.00	-0.54	0.31	7.14	-34.57	348.3	86.6	74.7
23.95	6.28	2.01	30.0	0.70	21.0	-0.54	0.31	0.00	1.00	1.00	0.00	0.00	-0.54	0.31	7.16	-34.91	348.0	86.8	74.6
23.85	6.28	2.01	30.0	0.70	21.0	-0.54	0.31	0.00	1.00	1.00	0.00	0.00	-0.54	0.31	7.19	-35.25	347.6	87.0	74.5
23.75	6.28	2.00	30.0	0.70	21.0	-0.54	0.31	0.00	1.00	1.00	0.00	0.00	-0.54	0.31	7.22	-35.59	347.3	87.3	74.5
23.65	6.28	2.00	30.0	0.70	21.0	-0.54	0.31	0.00	1.00	1.00	0.00	0.00	-0.54	0.31	7.25	-35.92	346.9	87.5	74.4
23.55	6.28	1.99	30.0	0.70	21.0	-0.54	0.31	0.00	1.00	1.00	0.00	0.00	-0.54	0.31	7.27	-36.26	346.6	87.7	74.3
23.45	6.28	1.99	30.0	0.70	21.0	-0.53	0.31	0.00	1.00	1.00	0.00	0.00	-0.53	0.31	7.30	-36.60	346.3	87.9	74.2
23.35	6.28	1.98	30.0	0.70	21.0	-0.53	0.30	0.00	1.00	1.00	0.00	0.00	-0.53	0.30	7.33	-36.93	345.9	88.1	74.2
23.25	6.28	1.98	30.0	0.70	21.0	-0.53	0.30	0.00	1.00	1.00	0.00	0.00	-0.53	0.30	7.36	-37.27	345.6	88.4	74.1
23.15	6.28	1.97	30.0	0.70	21.0	-0.53	0.30	0.00	1.00	1.00	0.00	0.00	-0.53	0.30	7.38	-37.60	345.3	88.6	74.0
23.05	6.28	1.97	30.0	0.70	21.0	-0.53	0.30	0.00	1.00	1.00	0.00	0.00	-0.53	0.30	7.41	-37.94	344.9	88.8	74.0
22.95	6.28	1.96	30.0	0.70	21.0	-0.53	0.30	0.00	1.00	1.00	0.00	0.00	-0.53	0.30	7.44	-38.27	344.6	89.0	73.9
22.85	6.28	1.96	30.0	0.70	21.0	-0.53	0.30	0.00	1.00	1.00	0.00	0.00	-0.53	0.30	7.47	-38.60	344.3	89.2	73.8
22.75	6.28	1.95	30.0	0.70	21.0	-0.53	0.30	0.00	1.00	1.00	0.00	0.00	-0.53	0.30	7.49	-38.93	343.9	89.4	73.7
22.65	6.28	1.95	30.0	0.70	21.0	-0.52	0.30	0.00	1.00	1.00	0.00	0.00	-0.52	0.30	7.52	-39.26	343.6	89.7	73.7
22.55	6.28	1.95	30.0	0.70	21.0	-0.52	0.30	0.00	1.00	1.00	0.00	0.00	-0.52	0.30	7.55	-39.59	343.3	89.9	73.6
22.44	6.28	1.94	30.0	0.70	21.0	-0.52	0.30	0.00	1.00	1.00	0.00	0.00	-0.52	0.30	7.58	-39.92	342.9	90.1	73.5
22.34	6.28	1.94	30.0	0.70	21.0	-0.52	0.30	0.00	1.00	1.00	0.00	0.00	-0.52	0.30	7.60	-40.24	342.6	90.3	73.5
22.24	6.28	1.93	30.0	0.70	21.0	-0.52	0.30	0.00	1.00	1.00	0.00	0.00	-0.52	0.30	7.63	-40.57	342.3	90.5	73.4
22.14	6.28	1.93	30.0	0.70	21.0	-0.52	0.30	0.00	1.00	1.00	0.00	0.00	-0.52	0.30	7.66	-40.90	342.0	90.7	73.3
22.04	6.28	1.92	30.0	0.70	21.0	-0.52	0.30	0.00	1.00	1.00	0.00	0.00	-0.52	0.30	7.69	-41.22	341.6	90.9	73.3
21.94	6.28	1.92	30.0	0.70	21.0	-0.52	0.29	0.00	1.00	1.00	0.00	0.00	-0.52	0.29	7.71	-41.55	341.3	91.2	73.2
21.84	6.28	1.91	30.0	0.70	21.0	-0.51	0.29	0.00	1.00	1.00	0.00	0.00	-0.51	0.29	7.74	-41.87	341.0	91.4	73.1
21.74	6.28	1.91	30.0	0.70	21.0	-0.51	0.29	0.00	1.00	1.00	0.00	0.00	-0.51	0.29	7.77	-42.19	340.7	91.6	73.0
21.64	6.28	1.90	30.0	0.70	21.0	-0.51	0.29	0.00	1.00	1.00	0.00	0.00	-0.51	0.29	7.80	-42.52	340.3	91.8	73.0
21.54	6.28	1.90	30.0	0.70	21.0	-0.51	0.29	0.00	1.00	1.00	0.00	0.00	-0.51	0.29	7.82	-42.84	340.0	92.0	72.9
21.44	6.28	1.89	30.0	0.70	21.0	-0.51	0.29	0.00	1.00	1.00	0.00	0.00	-0.51	0.29	7.85	-43.16	339.7	92.2	72.8
21.34	6.28	1.89	30.0	0.70	21.0	-0.51	0.29	0.00	1.00	1.00	0.00	0.00	-0.51	0.29	7.88	-43.48	339.4	92.4	72.8
21.24	6.28	1.88	30.0	0.70	21.0	-0.51	0.29	0.00	1.00	1.00	0.00	0.00	-0.51	0.29	7.91	-43.80	339.1	92.6	72.7
21.14	6.28	1.88	30.0	0.70	21.0	-0.51	0.29	0.00	1.00	1.00	0.00	0.00	-0.51	0.29	7.93	-44.11	338.7	92.8	72.6
21.04	6.28	1.88	30.0	0.70	21.0	-0.50	0.29	0.00	1.00	1.00	0.00	0.00	-0.50	0.29	7.96	-44.43	338.4	93.1	72.6
20.94	6.28	1.87	30.0	0.70	21.0	-0.50	0.29	0.00	1.00	1.00	0.00	0.00	-0.50	0.29	7.99	-44.75	338.1	93.3	72.5
20.84	6.28	1.87	30.0	0.70	21.0	-0.50	0.29	0.00	1.00	1.00	0.00	0.00	-0.50	0.29	8.02	-45.06	337.8	93.5	72.4
20.74	6.28	1.86	30.0	0.70	21.0	-0.50	0.29	0.00	1.00	1.00	0.00	0.00	-0.50	0.29	8.04	-45.38	337.5	93.7	72.4
20.64	6.28	1.86	30.0	0.70	21.0	-0.50	0.29	0.00	1.00	1.00	0.00	0.00	-0.50	0.29	8.07	-45.69	337.2	93.9	72.3
20.54	6.28	1.85	30.0	0.70	21.0	-0.50	0.28	0.00	1.00	1.00	0.00	0.00	-0.50	0.28	8.10	-46.01	336.9	94.1	72.2
20.44	6.28	1.85	30.0	0.70	21.0	-0.50	0.28	0.00	1.00	1.00	0.00	0.00	-0.50	0.28	8.13	-46.32	336.5	94.3	72.2
20.34	6.28	1.84	30.0	0.70	21.0	-0.50	0.28	0.00	1.00	1.00	0.00	0.00	-0.50	0.28	8.16	-46.63	336.2	94.5	72.1
20.24	6.28	1.84	30.0	0.70	21.0	-0.49	0.28	0.00	1.00	1.00	0.00	0.00	-0.49	0.28	8.18	-46.94	335.9	94.7	72.0
20.14	6.28	1.83	30.0	0.70	21.0	-0.49	0.28	0.00	1.00	1.00	0.00	0.00	-0.49	0.28	8.21	-47.25	335.6	94.9	72.0
20.04	6.28	1.83	30.0	0.70	21.0	-0.49	0.28	0.00	1.00	1.00	0.00	0.00	-0.49	0.28	8.24	-47.56	335.3	95.1	71.9
19.94	6.28	1.82	30.0	0.70	21.0	-0.49	0.28	0.00	1.00	1.00	0.00	0.00	-0.49	0.28	8.27	-47.87	335.0	95.3	71.8
19.84	6.28	1.82	30.0	0.70	21.0	-0.49	0.28	0.00	1.00	1.00	0.00	0.00	-0.49	0.28	8.29	-48.18	334.7	95.5	71.8
19.74	6.28	1.81	30.0	0.70	21.0	-0.49	0.28	0.00	1.00	1.00	0.00	0.00	-0.49	0.28	8.32	-48.48	334.4	95.7	71.7
19.64	6.28	1.81	30.0	0.70	21.0	-0.49	0.28	0.00	1.00	1.00	0.00	0.00	-0.49	0.28	8.35	-48.79	334.1	95.9	71.6
19.54	6.28	1.81	30.0	0.70	21.0	-0.49	0.28	0.00	1.00	1.00	0.00	0.00	-0.49	0.28	8.38	-49.09	333.8	96.1	71.6
19.44	6.28	1.80	0.0	0.70	0.0	0.00	0.00	0.35	1.00	1.00	-0.35	0.35	-0.35	0.35	8.40	-49.31	333.5	96.4	71.6
19.34	6.28	1.80	0.0	0.70	0.0	0.00	0.00	0.35	1.00	1.00	-0.35	0.35	-0.35	0.35	8.43	-49.54	333.3	96.6	71.6
19.24	6.28	1.79	0.0	0.70	0.0	0.00	0.00	0.35	1.00	1.00	-0.35	0.35	-0.35	0.35	8.46	-49.76	333.1	96.9	71.6
19.14	6.28	1.79	0.0	0.70	0.0	0.00	0.00	0.35	1.00	1.00	-0.35	0.35	-0.35	0.35	8.49	-49.98	332.9	97.1	71.6
19.04	6.28	1.78	0.0	0.70	0.0	0.00	0.00	0.35	1.00	1.00	-0.35	0.35	-0.35	0.35	8.51	-50.20	332.7	97.4	71.6
18.94	6.28	1.78	0.0	0.70	0.0	0.00	0.00	0.35	1.00	1.00	-0.35	0.35	-0.35	0.35	8.54	-50.42	332.4	97.6	71.6
18.84	6.28	1.77	0.0	0.70	0.0	0.00	0.00	0.35	1.00	1.00	-0.35	0.35	-0.35	0.35	8.57	-50.64	332.2	97.9	71.6
18.74	6.28	1.77	0.0	0.70	0.0	0.00	0.00	0.35	1.00	1.00	-0.35	0.35	-0.35	0.35	8.60	-50.86	332.0	98.1	71.6
18.64	6.28	1.76	0.0	0.70	0.0	0.00	0.00	0.35	1.00	1.00	-0.35	0.35	-0.35	0.35	8.62	-51.08	331.8	98.4	71.6
18.54	6.28	1.76	0.0	0.70	0.0	0.00	0.00	0.35	1.00	1.00	-0.35	0.35	-0.35	0.35	8.65	-51.30	331.6	98.6	71.6
18.44	6.28	1.75	0.0	0.70	0.0	0.00	0.00	0.35	1.00	1.00	-0.35	0.35	-0.35	0.35	8.68	-51.52	331.3	98.9	71.6
18.34	6.28	1.75	0.0	0.70	0.0	0.00	0.00	0.35	1.00	1.00	-0.35	0.35	-0.35	0.35	8.71	-51.74	331.1	99.1	71.6
18.24	6.28	1.74	0.0	0.70	0.0	0.00	0.00	0.35	1.00	1.00	-0.35	0.35	-0.35	0.35	8.73	-51.96	330.9	99.4	71.6
18.14	6.28	1.74	0.0	0.70	0.0	0.00	0.00	0.35	1.00	1.00	-0.35	0.35	-0.35	0.35	8.76	-52.18	330.7	99.6	71.6
18.04	6.28	1.73	0.0	0.70	0.0	0.00	0.00	0.35	1.00	1.00	-0.35	0.35	-0.35	0.35	8.79	-52.40	330.5	99.8	71.6
17.94	6.28	1.73	0.0	0.70	0.0	0.00	0.00	0.35	1.00	1.00	-0.35	0.35	-0.35	0.35	8.82	-52.62	330.2	100.1	71.6
17.84	6.28	1.72	0.0	0.70	0.0	0.00	0.00	0.35	1.00	1.00	-0.35	0.35	-0.35	0.35	8.84	-52.84	330.0	100.3	71.6
17.74	6.28	1.72	0.0	0.70	0.0	0.00	0.00	0.35	1.00	1.00	-0.35	0.35	-0.35	0.35	8.87	-53.06	329.8	100.6	71.6
17.64	6.28	1.71	0.0	0.70	0.0	0.00	0.00	0.35	1.00	1.00	-0.35	0.35	-0.35	0.35	8.90	-53.28	329.6	100.8	71.6
17.54	6.28	1.71	0.0	0.70	0.0	0.00	0.00	0.35	1.00	1.00	-0.35	0.35	-0.35	0.35	8.93	-53.50	329.4	101.1	71.6
17.43	6.28	1.70	0.0	0.70	0.0	0.00	0.00	0.35	1.00	1.00	-0.35	0.35	-0.35	0.35	8.95	-53.72	329.1	101.3	71.6
17.33	6.28	1.70	0.0	0.70	0.0	0.00	0.00	0.35	1.00	1.00	-0.35	0.35	-0.35	0.35	8.98	-53.94	328.9	101.6	71.6
17.23	6.28	1.69	0.0	0.70	0.0	0.00	0.00	0.35	1.00	1.00	-0.35	0.35	-0.35	0.35	9.01	-54.16	328.7	101.8	71.6
17.13	6.28	1.69	0.0	0.70	0.0	0.00	0.00	0.35	1.00	1.00	-0.35	0.35	-0.35	0.35	9.04	-54.38	328.5	102.1	71.6
17.03	6.28	1.68	0.0	0.70	0.0	0.00	0.00	0.35	1.00	1.00	-0.35	0.35	-0.35	0.35	9.06	-54.60	328.3	102.3	71.6
16.93	6.28	1.68	0.0	0.70	0.0	0.00	0.00	0.35	1.00	1.00	-0.35	0.35	-0.35	0.35	9.09	-54.82	328.0	102.6	71.6
16.83	6.28	1.67	0.0	0.70	0.0	0.00	0.00	0.35	1.00	1.00	-0.35	0.35	-0.35	0.35	9.12	-55.04	327.8	102.8	71.6
16.73	6.28	1.67	0.0	0.70	0.0	0.00	0.00	0.35	1.00	1.00	-0.35	0.35	-0.35	0.35	9.15	-55.26	327.6	103.1	71.6
16.63	6.28	1.66	0.0	0.70	0.0	0.00	0.00	0.35	1.00	1.00	-0.35	0.35	-0.35	0.35	9.17	-55.48	327.4	103.3	71.6
16.53	6.28	1.66	0.0	0.70	0.0	0.00	0.00	0.35	1.00	1.00	-0.35	0.35	-0.35	0.35	9.20	-55.71	327.2	103.6	71.6
16.43	6.28	1.65	0.0	0.70	0.0	0.00	0.00	0.35	1.00	1.00	-0.35	0.35	-0.35	0.35	9.23	-55.93	326.9	103.8	71.6
16.33	6.28	1.65	0.0	0.70	0.0	0.00	0.00	0.35	1.00	1.00	-0.35	0.35	-0.35	0.35	9.26	-56.15	326.7	104.1	71.6
16.23	6.28	1.65	0.0	0.70	0.0	0.00	0.00	0.35	1.00	1.00	-0.35	0.35	-0.35	0.35	9.28	-56.37	326.5	104.3	71.6
16.13	6.28	1.64	0.0	0.70	0.0	0.00	0.00	0.35	1.00	1.00	-0.35	0.35	-0.35	0.35	9.31	-56.59	326.3	104.6	71.6
16.03	6.28	1.64	0.0	0.70	0.0	0.00	0.00	0.35	1.00	1.00	-0.35	0.35	-0.35	0.35	9.34	-56.81	326.1	104.8	71.6
15.93	6.28	1.63	0.0	0.70	0.0	0.00	0.00	0.35	1.00	1.00	-0.35	0.35	-0.35	0.35	9.37	-57.03	325.8	105.1	71.6
15.83	6.28	1.63	0.0	0.70	0.0	0.00	0.00	0.35	1.00	1.00	-0.35	0.35	-0.35	0.35	9.39	-57.25	325.6	105.3	71.6
15.73	6.28	1.62	0.0	0.70	0.0	0.00	0.00	0.35	1.00	1.00	-0.35	0.35	-0.35	0.35	9.42	-57.47	325.4	105.6	71.6
15.63	6.28	1.62	0.0	0.70	0.0	0.00	0.00	0.35	1.00	1.00	-0.35	0.35	-0.35	0.35	9.45	-57.69	325.2	105.8	71.6

15.53	6.28	1.61	0.0	0.70	0.0	0.00	0.00	0.35	1.00	1.00	-0.35	0.35	-0.35	0.35	9.48	-57.91	325.0	106.0	71.6
15.43	6.28	1.61	0.0	0.70	0.0	0.00	0.00	0.35	1.00	1.00	-0.35	0.35	-0.35	0.35	9.51	-58.13	324.7	106.3	71.6
15.33	6.28	1.60	0.0	0.70	0.0	0.00	0.00	0.35	1.00	1.00	-0.35	0.35	-0.35	0.35	9.53	-58.35	324.5	106.5	71.6
15.23	6.28	1.60	0.0	0.70	0.0	0.00	0.00	0.35	1.00	1.00	-0.35	0.35	-0.35	0.35	9.56	-58.57	324.3	106.8	71.6
15.13	6.28	1.59	0.0	0.70	0.0	0.00	0.00	0.35	1.00	1.00	-0.35	0.35	-0.35	0.35	9.59	-58.79	324.1	107.0	71.6
15.03	6.28	1.59	0.0	0.70	0.0	0.00	0.00	0.35	1.00	1.00	-0.35	0.35	-0.35	0.35	9.62	-59.01	323.9	107.3	71.6
14.93	6.28	1.58	0.0	0.70	0.0	0.00	0.00	0.35	1.00	1.00	-0.35	0.35	-0.35	0.35	9.64	-59.23	323.6	107.5	71.6
14.83	6.28	1.58	0.0	0.70	0.0	0.00	0.00	0.35	1.00	1.00	-0.35	0.35	-0.35	0.35	9.67	-59.45	323.4	107.8	71.6
14.73	6.28	1.57	0.0	0.70	0.0	0.00	0.00	0.35	1.00	1.00	-0.35	0.35	-0.35	0.35	9.70	-59.67	323.2	108.0	71.6
14.63	6.28	1.57	0.0	0.70	0.0	0.00	0.00	0.35	1.00	1.00	-0.35	0.35	-0.35	0.35	9.73	-59.89	323.0	108.3	71.6
14.53	6.28	1.56	0.0	0.70	0.0	0.00	0.00	0.35	1.00	1.00	-0.35	0.35	-0.35	0.35	9.75	-60.11	322.7	108.5	71.6
14.43	6.28	1.56	0.0	0.70	0.0	0.00	0.00	0.35	1.00	1.00	-0.35	0.35	-0.35	0.35	9.78	-60.33	322.5	108.8	71.6
14.33	6.28	1.55	0.0	0.70	0.0	0.00	0.00	0.35	1.00	1.00	-0.35	0.35	-0.35	0.35	9.81	-60.55	322.3	109.0	71.6
14.23	6.28	1.55	0.0	0.70	0.0	0.00	0.00	0.35	1.00	1.00	-0.35	0.35	-0.35	0.35	9.84	-60.77	322.1	109.3	71.6
14.13	6.28	1.54	0.0	0.70	0.0	0.00	0.00	0.35	1.00	1.00	-0.35	0.35	-0.35	0.35	9.86	-60.99	321.9	109.5	71.6
14.03	6.28	1.54	0.0	0.70	0.0	0.00	0.00	0.35	1.00	1.00	-0.35	0.35	-0.35	0.35	9.89	-61.21	321.6	109.8	71.6
13.93	6.28	1.53	0.0	0.70	0.0	0.00	0.00	0.35	1.00	1.00	-0.35	0.35	-0.35	0.35	9.92	-61.43	321.4	110.0	71.6
13.83	6.28	1.53	0.0	0.70	0.0	0.00	0.00	0.35	1.00	1.00	-0.35	0.35	-0.35	0.35	9.95	-61.65	321.2	110.3	71.6
13.73	6.28	1.52	0.0	0.70	0.0	0.00	0.00	0.35	1.00	1.00	-0.35	0.35	-0.35	0.35	9.97	-61.88	321.0	110.5	71.6
13.63	6.28	1.52	0.0	0.70	0.0	0.00	0.00	0.35	1.00	1.00	-0.35	0.35	-0.35	0.35	10.00	-62.10	320.8	110.8	71.6
13.53	6.28	1.51	0.0	0.70	0.0	0.00	0.00	0.35	1.00	1.00	-0.35	0.35	-0.35	0.35	10.03	-62.32	320.5	111.0	71.6
13.43	6.28	1.51	0.0	0.70	0.0	0.00	0.00	0.35	1.00	1.00	-0.35	0.35	-0.35	0.35	10.06	-62.54	320.3	111.3	71.6
13.33	6.28	1.50	0.0	0.70	0.0	0.00	0.00	0.35	1.00	1.00	-0.35	0.35	-0.35	0.35	10.08	-62.76	320.1	111.5	71.6
13.23	6.28	1.50	0.0	0.70	0.0	0.00	0.00	0.35	1.00	1.00	-0.35	0.35	-0.35	0.35	10.11	-62.98	319.9	111.7	71.6
13.13	6.28	1.49	0.0	0.70	0.0	0.00	0.00	0.35	1.00	1.00	-0.35	0.35	-0.35	0.35	10.14	-63.20	319.7	112.0	71.6
13.03	6.28	1.49	0.0	0.70	0.0	0.00	0.00	0.35	1.00	1.00	-0.35	0.35	-0.35	0.35	10.17	-63.42	319.4	112.2	71.6
12.93	6.28	1.49	0.0	0.70	0.0	0.00	0.00	0.35	1.00	1.00	-0.35	0.35	-0.35	0.35	10.19	-63.64	319.2	112.5	71.6
12.83	6.28	1.48	0.0	0.70	0.0	0.00	0.00	0.35	1.00	1.00	-0.35	0.35	-0.35	0.35	10.22	-63.86	319.0	112.7	71.6
12.73	6.28	1.48	0.0	0.70	0.0	0.00	0.00	0.35	1.00	1.00	-0.35	0.35	-0.35	0.35	10.25	-64.08	318.8	113.0	71.6
12.63	6.28	1.47	0.0	0.70	0.0	0.00	0.00	0.35	1.00	1.00	-0.35	0.35	-0.35	0.35	10.28	-64.30	318.6	113.2	71.6
12.53	6.28	1.47	0.0	0.70	0.0	0.00	0.00	0.35	1.00	1.00	-0.35	0.35	-0.35	0.35	10.30	-64.52	318.3	113.5	71.6
12.42	6.28	1.46	0.0	0.70	0.0	0.00	0.00	0.35	1.00	1.00	-0.35	0.35	-0.35	0.35	10.33	-64.74	318.1	113.7	71.6
12.32	6.28	1.46	0.0	0.70	0.0	0.00	0.00	0.35	1.00	1.00	-0.35	0.35	-0.35	0.35	10.36	-64.96	317.9	114.0	71.6
12.22	6.28	1.45	0.0	0.70	0.0	0.00	0.00	0.35	1.00	1.00	-0.35	0.35	-0.35	0.35	10.39	-65.18	317.7	114.2	71.6
12.12	6.28	1.45	0.0	0.70	0.0	0.00	0.00	0.35	1.00	1.00	-0.35	0.35	-0.35	0.35	10.41	-65.40	317.5	114.5	71.6
12.02	6.28	1.44	0.0	0.70	0.0	0.00	0.00	0.35	1.00	1.00	-0.35	0.35	-0.35	0.35	10.44	-65.62	317.2	114.7	71.6
11.92	6.28	1.43	0.0	0.70	0.0	0.00	0.00	0.35	1.00	1.00	-0.35	0.35	-0.35	0.35	10.49	-65.84	317.0	115.0	71.6
11.82	6.28	1.42	0.0	0.70	0.0	0.00	0.00	0.35	1.00	1.00	-0.35	0.35	-0.35	0.35	10.54	-66.06	316.8	115.3	71.6
11.72	6.28	1.41	0.0	0.70	0.0	0.00	0.00	0.35	1.00	1.00	-0.35	0.35	-0.35	0.35	10.58	-66.28	316.6	115.5	71.6
11.62	6.28	1.40	0.0	0.70	0.0	0.00	0.00	0.35	1.00	1.00	-0.35	0.35	-0.35	0.35	10.63	-66.50	316.4	115.8	71.6
11.52	6.28	1.39	0.0	0.70	0.0	0.00	0.00	0.35	1.00	1.00	-0.35	0.35	-0.35	0.35	10.68	-66.72	316.1	116.1	71.6
11.42	6.28	1.38	0.0	0.70	0.0	0.00	0.00	0.35	1.00	1.00	-0.35	0.35	-0.35	0.35	10.73	-66.94	315.9	116.3	71.6
11.32	6.28	1.37	0.0	0.70	0.0	0.00	0.00	0.35	1.00	1.00	-0.35	0.35	-0.35	0.35	10.77	-67.16	315.7	116.6	71.6
11.22	6.28	1.35	0.0	0.70	0.0	0.00	0.00	0.35	1.00	1.00	-0.35	0.35	-0.35	0.35	10.82	-67.38	315.5	116.9	71.6
11.12	6.28	1.34	0.0	0.70	0.0	0.00	0.00	0.35	1.00	1.00	-0.35	0.35	-0.35	0.35	10.87	-67.60	315.3	117.1	71.6
11.02	6.28	1.33	0.0	0.70	0.0	0.00	0.00	0.35	1.00	1.00	-0.35	0.35	-0.35	0.35	10.91	-67.82	315.0	117.4	71.6
10.92	6.28	1.32	0.0	0.70	0.0	0.00	0.00	0.35	1.00	1.00	-0.35	0.35	-0.35	0.35	10.96	-68.05	314.8	117.7	71.6
10.82	6.28	1.31	0.0	0.70	0.0	0.00	0.00	0.35	1.00	1.00	-0.35	0.35	-0.35	0.35	11.01	-68.27	314.6	117.9	71.6
10.72	6.28	1.30	0.0	0.70	0.0	0.00	0.00	0.35	1.00	1.00	-0.35	0.35	-0.35	0.35	11.06	-68.49	314.4	118.2	71.6
10.62	6.28	1.29	0.0	0.70	0.0	0.00	0.00	0.35	1.00	1.00	-0.35	0.35	-0.35	0.35	11.10	-68.71	314.2	118.5	71.6
10.52	6.28	1.28	0.0	0.70	0.0	0.00	0.00	0.35	1.00	1.00	-0.35	0.35	-0.35	0.35	11.15	-68.93	313.9	118.7	71.6
10.42	6.28	1.27	0.0	0.70	0.0	0.00	0.00	0.35	1.00	1.00	-0.35	0.35	-0.35	0.35	11.20	-69.15	313.7	119.0	71.6
10.32	6.28	1.26	0.0	0.70	0.0	0.00	0.00	0.35	1.00	1.00	-0.35	0.35	-0.35	0.35	11.24	-69.37	313.5	119.3	71.6
10.22	6.28	1.25	0.0	0.70	0.0	0.00	0.00	0.35	1.00	1.00	-0.35	0.35	-0.35	0.35	11.29	-69.59	313.3	119.5	71.6
10.12	6.28	1.24	0.0	0.70	0.0	0.00	0.00	0.35	1.00	1.00	-0.35	0.35	-0.35	0.35	11.34	-69.81	313.1	119.8	71.6
10.02	6.28	1.22	0.0	0.70	0.0	0.00	0.00	0.35	1.00	1.00	-0.35	0.35	-0.35	0.35	11.39	-70.03	312.8	120.1	71.6
9.92	6.28	1.21	0.0	0.70	0.0	0.00	0.00	0.35	1.00	1.00	-0.35	0.35	-0.35	0.35	11.43	-70.25	312.6	120.3	71.6
9.82	6.28	1.20	0.0	0.70	0.0	0.00	0.00	0.35	1.00	1.00	-0.35	0.35	-0.35	0.35	11.48	-70.47	312.4	120.6	71.6
9.72	6.28	1.19	0.0	0.70	0.0	0.00	0.00	0.35	1.00	1.00	-0.35	0.35	-0.35	0.35	11.53	-70.69	312.2	120.9	71.6
9.62	6.28	1.18	0.0	0.70	0.0	0.00	0.00	0.35	1.00	1.00	-0.35	0.35	-0.35	0.35	11.57	-70.91	312.0	121.1	71.6
9.52	6.28	1.17	0.0	0.70	0.0	0.00	0.00	0.35	1.00	1.00	-0.35	0.35	-0.35	0.35	11.62	-71.13	311.7	121.4	71.6
9.42	6.28	1.16	0.0	0.70	0.0	0.00	0.00	0.35	1.00	1.00	-0.35	0.35	-0.35	0.35	11.67	-71.35	311.5	121.7	71.6
9.32	6.28	1.15	0.0	0.70	0.0	0.00	0.00	0.35	1.00	1.00	-0.35	0.35	-0.35	0.35	11.72	-71.57	311.3	121.9	71.6
9.22	6.28	1.14	0.0	0.70	0.0	0.00	0.00	0.35	1.00	1.00	-0.35	0.35	-0.35	0.35	11.76	-71.79	311.1	122.2	71.6
9.12	6.28	1.13	0.0	0.70	0.0	0.00	0.00	0.35	1.00	1.00	-0.35	0.35	-0.35	0.35	11.81	-72.01	310.8	122.5	71.6
9.02	6.28	1.12	0.0	0.70	0.0	0.00	0.00	0.35	1.00	1.00	-0.35	0.35	-0.35	0.35	11.86	-72.23	310.6	122.8	71.6
8.92	6.28	1.11	0.0	0.70	0.0	0.00	0.00	0.35	1.00	1.00	-0.35	0.35	-0.35	0.35	11.90	-72.45	310.4	123.0	71.6
8.82	6.28	1.10	0.0	0.70	0.0	0.00	0.00	0.35	1.00	1.00	-0.35	0.35	-0.35	0.35	11.95	-72.67	310.2	123.3	71.6
8.72	6.28	1.08	0.0	0.70	0.0	0.00	0.00	0.35	1.00	1.00	-0.35	0.35	-0.35	0.35	12.00	-72.89	310.0	123.6	71.6
8.62	6.28	1.07	0.0	0.70	0.0	0.00	0.00	0.35	1.00	1.00	-0.35	0.35	-0.35	0.35	12.05	-73.11	309.7	123.8	71.6
8.52	6.28	1.06	0.0	0.70	0.0	0.00	0.00	0.35	1.00	1.00	-0.35	0.35	-0.35	0.35	12.09	-73.33	309.5	124.1	71.6
8.42	6.28	1.05	28.0	0.70	19.6	-0.26	0.15	0.25	1.00	1.00	-0.25	0.25	-0.51	0.40	12.14	-73.66	309.2	124.4	71.5
8.32	6.28	1.04	28.0	0.70	19.6	-0.26	0.15	0.25	1.00	1.00	-0.25	0.25	-0.51	0.40	12.19	-73.98	308.9	124.7	71.5
8.22	6.28	1.02	28.0	0.70	19.6	-0.26	0.15	0.25	1.00	1.00	-0.25	0.25	-0.51	0.40	12.24	-74.29	308.6	125.0	71.5
8.12	6.28	1.01	28.0	0.70	19.6	-0.25	0.14	0.25	1.00	1.00	-0.25	0.25	-0.50	0.39	12.28	-74.61	308.2	125.3	71.4
8.02	6.28	1.00	28.0	0.70	19.6	-0.25	0.14	0.25	1.00	1.00	-0.25	0.25	-0.50	0.39	12.33	-74.92	307.9	125.6	71.4
7.92	6.28	0.99	28.0	0.70	19.6	-0.25	0.14	0.25	1.00	1.00	-0.25	0.25	-0.50	0.39	12.38	-75.24	307.6	125.9	71.4
7.82	6.28	0.97	28.0	0.70	19.6	-0.24	0.14	0.25	1.00	1.00	-0.25	0.25	-0.49	0.39	12.42	-75.55	307.3	126.2	71.3
7.72	6.28	0.96	28.0	0.70	19.6	-0.24	0.14	0.25	1.00	1.00	-0.25	0.25	-0.49	0.39	12.47	-75.86	307.0	126.4	71.3
7.62	6.28	0.95	28.0	0.70	19.6	-0.24	0.14	0.25	1.00	1.00	-0.25	0.25	-0.49	0.39	12.52	-76.16	306.7	126.7	71.3
7.52	6.28	0.94	28.0	0.70	19.6	-0.23	0.13	0.25	1.00	1.00	-0.25	0.25	-0.48	0.38	12.57	-76.47	306.4	127.0	71.2
7.41	6.28	0.92	28.0	0.70	19.6	-0.23	0.13	0.25	1.00	1.00	-0.25	0.25	-0.48	0.38	12.61	-76.77	306.1	127.3	71.2
7.31	6.28	0.91	28.0	0.70	19.6	-0.23	0.13	0.25	1.00	1.00	-0.25	0.25	-0.48	0.38	12.66	-77.07	305.8	127.6	71.2
7.21	6.28	0.90	28.0	0.70	19.6	-0.22	0.13	0.25	1.00	1.00	-0.25	0.25	-0.47	0.38	12.71	-77.37	305.5	127.9	71.1
7.11	6.28	0.88	28.0	0.70	19.6	-0.22	0.13	0.25	1.00	1.00	-0.25	0.25	-0.47	0.38	12.75	-77.66	305.2	128.2	71.1
7.01	6.28	0.87	28.0	0.70	19.6	-0.22	0.12	0.25	1.00	1.00	-0.25	0.25	-0.47	0.37	12.80	-77.96	304.9	128.5	71.1
6.91	6.28	0.86	28.0	0.70	19.6	-0.21	0.12	0.25	1.00	1.00	-0.25	0.25	-0.46	0.37	12.85	-78.25	304.6	128.7	71.1
6.81	6.28	0.85	28.0	0.70	19.6	-0.21	0.12	0.25	1.00	1.00	-0.25	0.25	-0.46	0.37	12.90	-78.54	304.3	129.0	71.0
6.71	6.28	0.83	28.0	0.70	19.6	-0.21	0.12	0.25	1.00	1.00	-0.25	0.25	-0.46	0.37	12.94	-78.83	304.0	129.3	71.0
6.61	6.28	0.82	28.0	0.70	19.6	-0.20	0.12	0.25	1.00	1.00	-0.25	0.25	-0.45	0.37	12.99	-79.11	303.7	129.6	71.0
6.51	6.28	0.81	28.0	0.70	19.6	-0.20	0.12	0.25	1.00	1.00	-0.25	0.25	-0.45	0.37	13.04	-79.40	303.5	129.8	70.9
6.41	6.28	0.80	28.0	0.70	19.6	-0.20	0.11	0.25	1.00	1.00	-0.25	0.25	-0.45	0.36	13.08	-79.68	303.2	130.1	70.9
6.31	6.28	0.78	28.0	0.70	19.6	-0.20	0.11	0.25	1.00	1.00	-0.25	0.25	-0.45	0.36	13.13	-79.96	302.9	130.4	70.9
6.21	6.28	0.77	28.0	0.70	19.6	-0.19	0.11	0.25	1.00	1.00	-0.25	0.25	-0.44	0.36	13.18	-80.24	302.6	130.7	70.9
6.11	6.28	0.76	28.0	0.70	19.6	-0.19	0.11	0.25	1.00	1.00	-0.25	0.25	-0.44	0.36	13.23	-80.52	302.3	130.9	70.8
6.01	6.28	0.74	28.0	0.70	19.6	-0.19	0.11	0.25	1.00	1.00	-0.25	0.25	-0.44	0.36	13.27	-80.79	302.1	131.2	70.8
5.91	6.28	0.73	28.0	0.70	19.6	-0.18	0.10	0.25	1.00	1.00	-0.25	0.25	-0.43	0.35	13.32	-81.06	301.8	131.5	70.8
5.81	6.28	0.72	28.0	0.70	19.6	-0.18	0.10	0.25	1.00	1.00	-0.25	0.25	-0.43	0.35	13.37	-81.33	301.5	131.8	70.8
5.71	6.28	0.71	28.0	0.70	19.6	-0.18	0.10	0.25	1.00	1.00	-0.25	0.25	-0.43	0.35	13.42	-81.60	301.3	132.0	70.7
5.61	6.28	0.69	28.0	0.70	19.6	-0.17	0.10	0.25	1.00	1.00	-0.25	0.25	-0.42	0.35	13.46	-81.87	301.0	132.3	70.7
5.51	6.28	0.68	28.0	0.70	19.6	-0.17	0.10	0.25	1.00	1.00	-0.25	0.25	-0.42	0.35	13.51	-82.13	300.7	132.6	70.7
5.41	6.28	0.67	28.0	0.70	19.6	-0.17	0.10	0.25	1.00	1.00	-0.25	0.25	-0.42	0.35	13.56	-82.39	300.5	132.8	70.7
5.31	6.28	0.66	28.0	0.70	19.6	-0.16	0.09	0.25	1.00	1.00	-0.25	0.25	-0.41	0.34	13.60	-82.65	300.2	133.1	70.7
5.21	6.28	0.64	28.0	0.70	19.6	-0.16	0.09	0.25	1.00	1.00	-0.25	0.25	-0.41	0.34	13.65	-82.91	299.9	133.3	70.6
5.11	6.28	0.63	28.0	0.70	19.6	-0.16	0.09	0.25	1.00	1.00	-0.25	0.25	-0.41	0.34	13.70	-83.17	299.7	133.6	70.6
5.01	6.28	0.62	28.0	0.70	19.6	-0.15	0.09	0.25	1.00	1.00	-0.25	0.25	-0.40	0.34	13.75	-83.42	299.4	133.9	70.6
4.91	6.28	0.60	28.0	0.70	19.6	-0.15	0.09	0.25	1.00	1.00	-0.25	0.25	-0.40	0.34	13.79	-83.67	299.2	134.1	70.6
4.81	6.28	0.59	28.0	0.70	19.6	-0.15	0.08	0.25	1.00	1.00	-0.25	0.25	-0.40	0.33	13.84	-83.92	298.9	134.4	70.5
4.71	6.28	0.58	28.0	0.70	19.6	-0.14	0.08	0.25	1.00	1.00	-0.25	0.25	-0.39	0.33	13.89	-84.17	298.7	134.6	70.5
4.61	6.28	0.57	28.0	0.70	19.6	-0.14	0.08	0.25	1.00	1.00	-0.25	0.25	-0.39	0.33	13.93	-84.42	298.4	134.9	70.5
4.51	6.28	0.55	28.0	0.70	19.6	-0.14	0.08	0.25	1.00	1.00	-0.25	0.25	-0.39	0.33	13.98	-84.66	298.2	135.1	70.5
4.41	6.28	0.54	28.0	0.70	19.6	-0.13	0.08	0.25	1.00	1.00	-0.25	0.25	-0.38	0.33	14.03	-84.91	298.0	135.4	70.5
4.31	6.28	0.53	28.0	0.70	19.6	-0.13	0.08	0.25	1.00	1.00	-0.25	0.25	-0.38	0.33	14.08	-85.15	297.7	135.7	70.5
4.21	6.28	0.52	28.0	0.70	19.6	-0.13	0.07	0.25	1.00	1.00	-0.25	0.25	-0.38	0.32	14.12	-85.38	297.5	135.9	70.4
4.11	6.28	0.50	28.0	0.70	19.6	-0.13	0.07	0.25	1.00	1.00	-0.25	0.25	-0.38	0.32	14.17	-85.62	297.2	136.2	70.4
4.01	6.28	0.49	28.0	0.70	19.6	-0.12	0.07	0.25	1.00	1.00	-0.25	0.25	-0.37	0.32	14.22	-85.86	297.0	136.4	70.4
3.91	6.28	0.48	28.0	0.70	19.6	-0.12	0.07	0.25	1.00	1.00	-0.25	0.25	-0.37	0.32	14.26	-86.09	296.8	136.7	70.4

3.81	6.28	0.46	28.0	0.70	19.6	-0.12	0.07	0.25	1.00	1.00	-0.25	0.25	-0.37	0.32	14.31	-86.32	296.5	136.9	70.4
3.71	6.28	0.45	28.0	0.70	19.6	-0.11	0.06	0.25	1.00	1.00	-0.25	0.25	-0.36	0.31	14.36	-86.55	296.3	137.1	70.4
3.61	6.28	0.44	28.0	0.70	19.6	-0.11	0.06	0.25	1.00	1.00	-0.25	0.25	-0.36	0.31	14.41	-86.77	296.1	137.4	70.3
3.51	6.28	0.43	28.0	0.70	19.6	-0.11	0.06	0.25	1.00	1.00	-0.25	0.25	-0.36	0.31	14.45	-87.00	295.9	137.6	70.3
3.41	6.28	0.41	0.0	0.70	0.0	0.00	0.00	0.50	1.00	1.00	0.00	0.00	0.00	0.00	14.50	-87.00	295.9	137.7	70.3
3.31	6.28	0.40	0.0	0.70	0.0	0.00	0.00	0.50	1.00	1.00	0.00	0.00	0.00	0.00	14.55	-87.00	295.9	137.7	70.3
3.21	6.28	0.39	0.0	0.70	0.0	0.00	0.00	0.50	1.00	1.00	0.00	0.00	0.00	0.00	14.59	-87.00	295.9	137.8	70.3
3.11	6.28	0.38	0.0	0.70	0.0	0.00	0.00	0.50	1.00	1.00	0.00	0.00	0.00	0.00	14.64	-87.00	295.9	137.8	70.3
3.01	6.28	0.37	0.0	0.70	0.0	0.00	0.00	0.50	1.00	1.00	0.00	0.00	0.00	0.00	14.69	-87.00	295.9	137.9	70.3
2.91	6.28	0.35	0.0	0.70	0.0	0.00	0.00	0.50	1.00	1.00	0.00	0.00	0.00	0.00	14.74	-87.00	295.9	137.9	70.3
2.81	6.28	0.34	0.0	0.70	0.0	0.00	0.00	0.50	1.00	1.00	0.00	0.00	0.00	0.00	14.78	-87.00	295.9	138.0	70.3
2.71	6.28	0.33	0.0	0.70	0.0	0.00	0.00	0.50	1.00	1.00	0.00	0.00	0.00	0.00	14.83	-87.00	295.9	138.0	70.3
2.61	6.28	0.32	0.0	0.70	0.0	0.00	0.00	0.50	1.00	1.00	0.00	0.00	0.00	0.00	14.88	-87.00	295.9	138.1	70.3
2.51	6.28	0.31	0.0	0.70	0.0	0.00	0.00	0.50	1.00	1.00	0.00	0.00	0.00	0.00	14.93	-87.00	295.9	138.1	70.3
2.40	6.28	0.29	0.0	0.70	0.0	0.00	0.00	0.50	1.00	1.00	0.00	0.00	0.00	0.00	14.97	-87.00	295.9	138.1	70.3
2.30	6.28	0.28	0.0	0.70	0.0	0.00	0.00	0.50	1.00	1.00	0.00	0.00	0.00	0.00	15.02	-87.00	295.9	138.2	70.3
2.20	6.28	0.27	0.0	0.70	0.0	0.00	0.00	0.50	1.00	1.00	0.00	0.00	0.00	0.00	15.07	-87.00	295.9	138.2	70.3
2.10	6.28	0.26	0.0	0.70	0.0	0.00	0.00	0.50	1.00	1.00	0.00	0.00	0.00	0.00	15.11	-87.00	295.9	138.3	70.3
2.00	6.28	0.25	0.0	0.70	0.0	0.00	0.00	0.50	1.00	1.00	0.00	0.00	0.00	0.00	15.16	-87.00	295.9	138.3	70.3
1.90	6.28	0.23	0.0	0.70	0.0	0.00	0.00	0.50	1.00	1.00	0.00	0.00	0.00	0.00	15.21	-87.00	295.9	138.4	70.3
1.80	6.28	0.22	0.0	0.70	0.0	0.00	0.00	0.50	1.00	1.00	0.00	0.00	0.00	0.00	15.26	-87.00	295.9	138.4	70.3
1.70	6.28	0.21	0.0	0.70	0.0	0.00	0.00	0.50	1.00	1.00	0.00	0.00	0.00	0.00	15.30	-87.00	295.9	138.5	70.3
1.60	6.28	0.20	0.0	0.70	0.0	0.00	0.00	0.50	1.00	1.00	0.00	0.00	0.00	0.00	15.35	-87.00	295.9	138.5	70.3
1.50	6.28	0.19	0.0	0.70	0.0	0.00	0.00	0.50	1.00	1.00	0.00	0.00	0.00	0.00	15.40	-87.00	295.9	138.6	70.3
1.40	6.28	0.17	0.0	0.70	0.0	0.00	0.00	0.50	1.00	1.00	0.00	0.00	0.00	0.00	15.44	-87.00	295.9	138.6	70.3
1.30	6.28	0.16	0.0	0.70	0.0	0.00	0.00	0.50	1.00	1.00	0.00	0.00	0.00	0.00	15.49	-87.00	295.9	138.7	70.3
1.20	6.28	0.15	0.0	0.70	0.0	0.00	0.00	0.50	1.00	1.00	0.00	0.00	0.00	0.00	15.54	-87.00	295.9	138.7	70.3
1.10	6.28	0.14	0.0	0.70	0.0	0.00	0.00	0.50	1.00	1.00	0.00	0.00	0.00	0.00	15.59	-87.00	295.9	138.8	70.3
1.00	6.28	0.13	0.0	0.70	0.0	0.00	0.00	0.50	1.00	1.00	0.00	0.00	0.00	0.00	15.63	-87.00	295.9	138.8	70.3
0.90	6.28	0.11	0.0	0.70	0.0	0.00	0.00	0.50	1.00	1.00	0.00	0.00	0.00	0.00	15.68	-87.00	295.9	138.9	70.3
0.80	6.28	0.10	0.0	0.70	0.0	0.00	0.00	0.50	1.00	1.00	0.00	0.00	0.00	0.00	15.73	-87.00	295.9	138.9	70.3
0.70	6.28	0.09	0.0	0.70	0.0	0.00	0.00	0.50	1.00	1.00	0.00	0.00	0.00	0.00	15.77	-87.00	295.9	139.0	70.3
0.60	6.28	0.08	0.0	0.70	0.0	0.00	0.00	0.50	1.00	1.00	0.00	0.00	0.00	0.00	15.82	-87.00	295.9	139.0	70.3
0.50	6.28	0.07	0.0	0.70	0.0	0.00	0.00	0.50	1.00	1.00	0.00	0.00	0.00	0.00	15.87	-87.00	295.9	139.0	70.3
0.40	6.28	0.05	0.0	0.70	0.0	0.00	0.00	0.50	1.00	1.00	0.00	0.00	0.00	0.00	15.92	-87.00	295.9	139.1	70.3
0.30	6.28	0.04	0.0	0.70	0.0	0.00	0.00	0.50	1.00	1.00	0.00	0.00	0.00	0.00	15.96	-87.00	295.9	139.1	70.3
0.20	6.28	0.03	0.0	0.70	0.0	0.00	0.00	0.50	1.00	1.00	0.00	0.00	0.00	0.00	16.01	-87.00	295.9	139.2	70.3
0.10	6.28	0.02	0.0	0.70	0.0	0.00	0.00	0.50	1.00	1.00	0.00	0.00	0.00	0.00	16.06	-87.00	295.9	139.2	70.3
0.00	6.28	0.01	0.0	0.70	0.0	0.00	0.00	0.50	1.00	1.00	0.00	0.00	0.00	0.00	16.11	-87.00	295.9	139.3	70.3

SETTLEMENT based on Ultimate Loading by Vesic Method (1977):
Ztip=50.00 Btip= 2.00 Cp= 0.135 Cs= 0.234
Xpp=2.545-in Xps= 0.011-in Xtip= 2.556-in
Cp & Cs are average value at bearing stratum from pile tip extend to 0 Btip

At loading: Qtip=278.4-kp Qtop= 295.9-kp Qside= 17.5-kp
Xtip=2.556-in Xtop= 2.702-in Xshaft= 0.146-in

LOAD - TOTAL SETTLEMENT RELATION (from t-z, and q-w curves):
Based on Vesic Method (1977)

Xtop -in	Xshaft -in	Xtip -in	Qtip -kp	Qside -kp	Qtotal -kp
0.0002	0.0002	0.0000	0.4	0.3	0.7
0.0174	0.0030	0.0144	4.4	4.9	9.3
0.0343	0.0056	0.0287	8.4	8.5	16.9
0.0511	0.0080	0.0431	12.4	11.3	23.7
0.0677	0.0102	0.0575	16.4	13.4	29.9
0.0842	0.0124	0.0719	20.4	15.0	35.4
0.1006	0.0144	0.0862	24.4	16.1	40.5
0.1169	0.0163	0.1006	28.4	16.8	45.3
0.1331	0.0181	0.1150	32.4	17.2	49.7
0.1493	0.0200	0.1293	36.4	17.4	53.8
0.1654	0.0217	0.1437	40.4	17.5	57.8
0.1815	0.0234	0.1581	44.3	17.4	61.7
0.1976	0.0251	0.1725	48.2	17.2	65.4
0.2136	0.0268	0.1868	52.1	17.0	69.1
0.2297	0.0284	0.2012	55.9	16.8	72.8
0.2457	0.0301	0.2156	59.8	16.6	76.4
0.2617	0.0317	0.2299	63.6	16.4	79.9
0.2777	0.0333	0.2443	67.3	16.2	83.5
0.2937	0.0350	0.2587	71.1	16.0	87.1
0.3096	0.0366	0.2731	74.8	15.9	90.7
0.3256	0.0382	0.2874	78.4	15.8	94.2
0.3415	0.0397	0.3018	82.1	15.7	97.7
0.3575	0.0413	0.3162	85.6	15.6	101.2
0.3734	0.0429	0.3306	89.2	15.5	104.7
0.3893	0.0444	0.3449	92.7	15.4	108.1
0.4052	0.0459	0.3593	96.1	15.3	111.5
0.4210	0.0474	0.3737	99.5	15.2	114.7
0.4369	0.0488	0.3880	102.9	15.1	118.0
0.4527	0.0503	0.4024	106.2	14.9	121.1
0.4684	0.0517	0.4168	109.5	14.7	124.2
0.4842	0.0530	0.4312	112.7	14.4	127.2
0.4999	0.0544	0.4455	115.9	14.1	130.1
0.5156	0.0557	0.4599	119.1	13.8	132.9
0.5313	0.0570	0.4743	122.2	13.5	135.7
0.5469	0.0583	0.4886	125.2	13.2	138.4
0.5625	0.0595	0.5030	128.2	12.9	141.1
0.5782	0.0608	0.5174	131.2	12.6	143.8
0.5938	0.0620	0.5318	134.1	12.4	146.5
0.6094	0.0633	0.5461	136.9	12.6	149.5
0.6251	0.0646	0.5605	139.7	12.6	152.3
0.6406	0.0658	0.5749	142.5	12.6	155.1
0.6562	0.0670	0.5892	145.2	12.6	157.8
0.6718	0.0682	0.6036	147.9	12.6	160.5
0.6873	0.0693	0.6180	150.5	12.7	163.1
0.7028	0.0705	0.6324	153.1	12.7	165.8
0.7183	0.0716	0.6467	155.6	12.8	168.3
0.7338	0.0727	0.6611	158.1	12.8	170.9
0.7493	0.0738	0.6755	160.5	12.9	173.4
0.7647	0.0749	0.6898	162.9	13.0	175.9
0.7802	0.0759	0.7042	165.3	13.1	178.3
0.7956	0.0770	0.7186	167.6	13.2	180.7
0.8110	0.0780	0.7330	169.8	13.3	183.1
0.8263	0.0790	0.7473	172.0	13.4	185.4
0.8417	0.0800	0.7617	174.2	13.5	187.7
0.8570	0.0810	0.7761	176.4	13.6	190.0
0.8724	0.0819	0.7904	178.5	13.7	192.2
0.8877	0.0829	0.8048	180.5	13.8	194.3
0.9030	0.0838	0.8192	182.5	13.9	196.4
0.9182	0.0847	0.8336	184.5	14.0	198.5
0.9335	0.0855	0.8479	186.5	14.1	200.5
0.9487	0.0864	0.8623	188.4	14.1	202.5
0.9639	0.0872	0.8767	190.3	14.2	204.5
0.9791	0.0881	0.8910	192.1	14.2	206.3
0.9943	0.0889	0.9054	193.9	14.3	208.2

1.0095	0.0897	0.9198	195.7	14.3	210.0
1.0246	0.0904	0.9342	197.4	14.3	211.7
1.0397	0.0912	0.9485	199.1	14.3	213.4
1.0548	0.0919	0.9629	200.8	14.3	215.1
1.0699	0.0927	0.9773	202.4	14.4	216.8
1.0850	0.0934	0.9917	204.0	14.4	218.4
1.1001	0.0941	1.0060	205.6	14.4	220.0
1.1152	0.0948	1.0204	207.2	14.5	221.6
1.1303	0.0955	1.0348	208.7	14.5	223.3
1.1453	0.0962	1.0491	210.2	14.7	224.9
1.1604	0.0969	1.0635	211.7	14.9	226.6
1.1755	0.0976	1.0779	213.2	15.1	228.3
1.1904	0.0981	1.0923	214.6	14.8	229.4
1.2054	0.0988	1.1066	216.0	14.8	230.8
1.2204	0.0994	1.1210	217.4	14.8	232.2
1.2353	0.1000	1.1354	218.7	14.8	233.5
1.2503	0.1006	1.1497	220.1	14.8	234.9
1.2653	0.1011	1.1641	221.4	14.8	236.2
1.2802	0.1017	1.1785	222.7	14.8	237.5
1.2951	0.1023	1.1929	224.0	14.8	238.7
1.3101	0.1028	1.2072	225.2	14.7	240.0
1.3250	0.1034	1.2216	226.5	14.7	241.2
1.3399	0.1039	1.2360	227.7	14.7	242.4
1.3548	0.1044	1.2503	228.9	14.7	243.6
1.3697	0.1050	1.2647	230.1	14.7	244.8
1.3846	0.1055	1.2791	231.3	14.7	246.0
1.3995	0.1060	1.2935	232.4	14.7	247.1
1.4143	0.1065	1.3078	233.6	14.7	248.2
1.4292	0.1070	1.3222	234.7	14.6	249.4
1.4441	0.1075	1.3366	235.8	14.6	250.5
1.4589	0.1080	1.3509	236.9	14.6	251.5
1.7373	0.1161	1.6211	255.5	14.4	269.9
2.0138	0.1225	1.8913	270.0	14.2	284.1
2.2877	0.1261	2.1615	278.4	13.9	292.3
2.5573	0.1256	2.4317	277.2	13.7	290.9
2.8219	0.1200	2.7019	264.7	13.5	278.2

At Qwork= 100.00-kp Settlement= 0.35193-in
At Qwork= 100.00-kp Secant Stiffness Kqx= 284.15-kp/-in
At Xallow= 1.00-in Q= 208.85-kp
Note: If the program cannot find a result or the result exceeds the upper limit. The result will be displayed as 99999.

SUMMARY:

Total Ultimate Capacity (Down)= 295.863-kp Total Ultimate Capacity (Up)= 139.281-kp
Total Allowable Capacity (Down)= 101.534-kp Total Allowable Capacity (Up)= 77.693-kp

Weight above Ground= 0.00 Total Pile Weight= 16.11-kp *Soil Weight is not included
Side Resistance (Down)= 17.478-kp Side Resistance (Up)= 123.176-kp
Tip Resistance (Down)= 278.385-kp Tip Resistance (Up)= 0.000-kp
Negative Friction, Qneg= -86.998-kp, which has been subtracted from Total Ultimate Capacity (Down)
Negative friction does not affect Total Uplift Ultimate Capacity (Up)

OK! Qallow > Q * Vertical Load, Q= 100.0 -kp

FACTOR OF SAFETY:

FSside	FStip	FSup	FSweight
2.0	3.0	2.0	1.0

* FStorsion = FSside

Notes:
* Settlement in the program is Elastic Settlement only. Consolidation Settlement is not calculated!
Length - Pile length, distance from pile top to tip (not from ground surface)
Width or D - Width of pile shaft (pile diameter)
Ds and Dl - Short Side and Long Side of Footing
Area - Section area of pile shaft or tip area of pile
Sv - Vertical stress in soils (It may be limited based on critical depth, Z_lim or Z/D
qult - Ultimate tip resistance (pressure)
Qtip_dw - Ultimate downward tip resistance (Force or Capacity)
Qtip_up - Ultimate uplift tip resistance for belled pile or uplift plate (Force or Capacity)
Torsion - Ultimate torsion resistance for single pile (Capacity)
dz - Small Segment of Depth for Calculation
Zs - Soil Depth, Depth from ground surface
Zp - Pile Depth, Depth from pile top
Prem - Primer of pile shaft
Phi - Soil internal friction angle (between soils)
Kf - Friction factor to convert Phi to Delta
Delta - Ski friction between soil and pile (function of Phi. It is different from Phi)
f_dw - Downward Resistance between soil and pile from Delta
f_up - Uplift Resistance between soil and pile from Delta
C - Soil cohesion (between soils)
Ca - Adhesion between soil and pile (function of C. It is different from C) Ca=KaKcC
Ka - Adhesion ratio, C/Ca
Kc - Adhesion factor defended by users
Ca_dw - Downward adhesion between pile and soil
Ca_up - Uplift adhesion between pile and soil
Sf_dw - Downward side resistance (sum of friction and adhesion, f_dw + Ca_dw)
Sf_up - Uplift side resistance (sum of friction and adhesion, f_up + Ca_up)
Torsion side resistance = (Sf_dw+Sf_up)/2 * pile diameter/2
Weight - Weight of Pile shaft
Qneg - negative friction Resistance
Qside - Ultimate side resistance (Qside_dw or Qside_up)
Qtip - Ultimate tip resistance (Qtip_dw or Qtip_up for uplift plate)
Q_dw - Ultimate downward capacity (Qtip + Qside_dw)
Q_up - Ultimate uplift capacity (Weight + Qside_up)
E - Elastic modules
Xs - Settlement due to axial deformation of pile shaft
Xpp - Settlement due to point load from pile tip
Xps- Settlement due to load from pile shaft
Xtop - Total settlement, Xs + Xpp + Xps
Xtip - Tip settlement, Xpp + Xps
Xshaft - Shaft deformation, Xs
Xallow - Allowable settlement specified by users
Qwork - Vertical working load applied to pile
Qallow - Vertical allowable load, Qult/F.S.

VERTICAL ANALYSIS

Figure 1

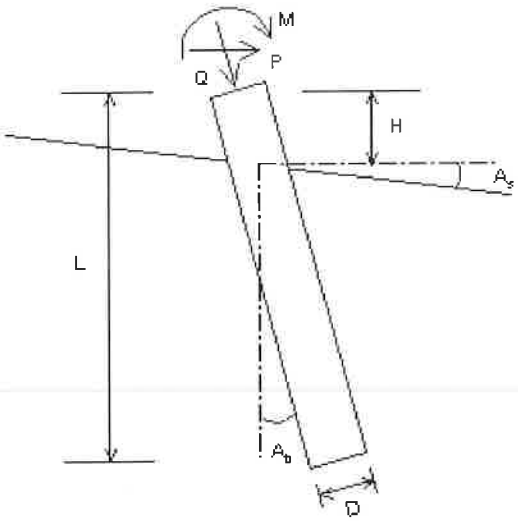

Drilled Shaft (dia >24 in. or 61 cm)

Loads:
Load Factor for Vertical Loads= 1.0
Load Factor for Lateral Loads= 1.0
Loads Supported by Pile Cap= 0 %
Shear Condition: Static

(with Load Factor)
Vertical Load, Q= 224.0 -kp

Profile:
Pile Length, L= 50.0 -ft
Top Height, H= 0 -ft
Slope Angle, As= 0
Batter Angle, Ab= 0

* Zero Friction *
Zero Friction Start: 0 -ft End: 3.5 -ft
* Negative Friction *
Negative Friction Start: 3.5 -ft End: 32 -ft with Factor: 1

Soil Data:

Depth -ft	Gamma -lb/f3	Phi	C -kp/f2	K -lb/i3	e50 or Dr %	Nspt
0	120.0	0.0	0.500	276.5	0.92	9
3.5	126.9	28	0.250	231.7	0.98	8
8.5	108.0	0.0	0.350	44.2	1.74	3
12	48.4	0.0	0.350	41.5	1.81	3
19.5	46.7	30	0.00	17.4	23.30	6
24.5	57.9	34	0.00	57.7	49.28	17
35	61.2	36	0.00	105.5	69.49	34

Pile Data:

Depth -ft	Width -in	Area -in2	Per. -in	I -in4	E -kp/i2	Weight -kp/f
0.0	36	1017.9	113.1	82448.0	3000	1.060
50.0						

Vertical Capacity:
Weight above Ground= 0.00 Total Weight= 36.25-kp *Soil Weight is not included
Side Resistance (Down)= 35.660-kp Side Resistance (Up)= 190.159-kp
Tip Resistance (Down)= 756.629-kp Tip Resistance (Up)= 0.000-kp
Total Ultimate Capacity (Down) Qult= 792.288-kp Total Ultimate Capacity (Up)= 226.408-kp
Total Allowable Capacity (Down) Qallow= 270.039-kp Total Allowable Capacity (Up) Qallow= 131.329-kp
OK! Qallow > Q

Settlement Calculation:
At Q= 224.00-kp Settlement= 0.41706-in
At Xallow= 1.00-in Q= 437.69888-kp

Note: If the program cannot find a result or the result exceeds the upper limit. The result will be displayed as 99999.

ALLOWABLE CAPACITY vs FOUNDATION DEPTH

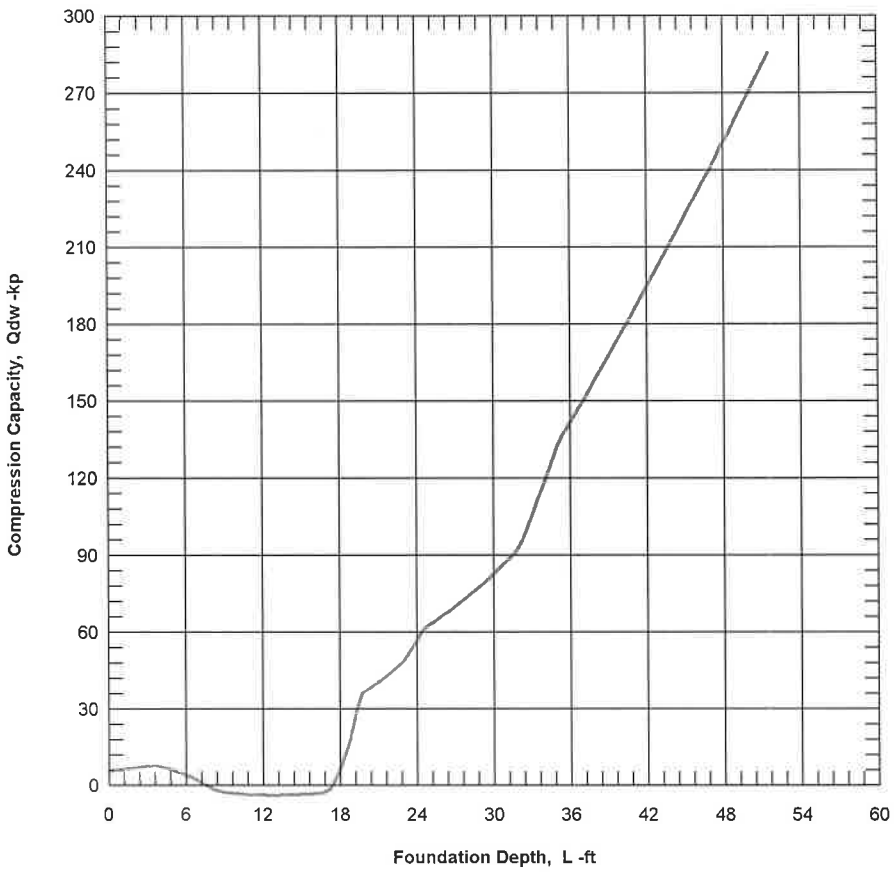

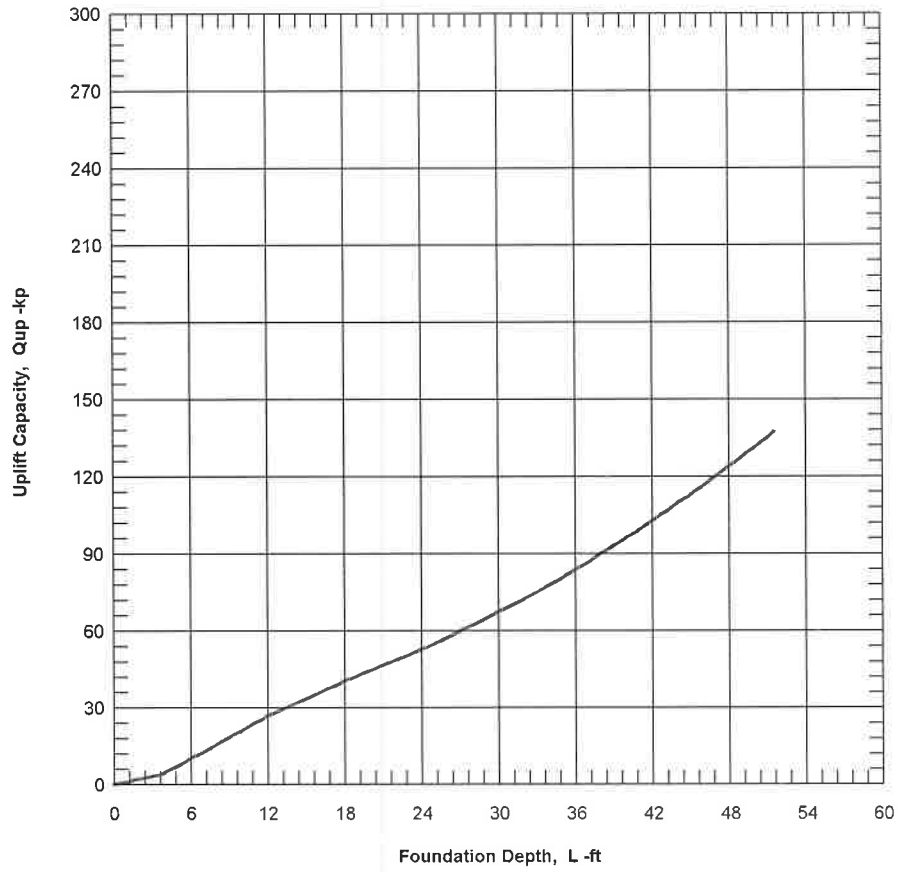

CivilTech Software

16G136 - 36-in-dia Drilled Pier
50-ft-deep; Using B-1 data

Figure 1

```
*****************************************************************
                    ALLPILE 7
       VERTICAL ANALYSIS DETAILED OUTPUT
        Copyright by CivilTech Software
              www.civiltech.com
*****************************************************************
Licensed to
Date: 7/8/2019  File: P:\Geotechnical\2016 Geotechnical\16G136 Alston 2 CI Bldgs Long Beach\Deep Foundation Design\Apr 28 2016\Boring B-1\36india50ftdeep_01.alp                    1.0

Title 1: 16G136 - 36-in-dia Drilled Pier
Title 2: 50-ft-deep; Using B-1 data

ALLPILE INPUT DATA:
**_____________________________________________________**

* Pile Type Page *
Unit: English
Diameter more than 24in (61cm).  For bell section, select "Belled" in Diameter Variation of Pile Section Screen. Recommendation: 2 to 4 in Item 3 of Page F.
Pile Type: Drilled Shaft (dia >24 in. or 61 cm)

* Pile Profile *
Foundation Depth: 50.0 -ft
Top Height: 0 -ft
Slope Angle: 0
Pile Angle: 0

* Pile Properties *
Zs      Width   Area    Perim.    I       E      Weight  Mix     Out     In      Other.  Type
-ft     -in     -in2    -in       -in4    -kp/i2 -kp/f   %       Side    Side    Par.
_____________________________________________________________________________________________
0.0     36      1017.9  113.1     82448.0 3000   1.060   0.0     4       4       0       Concrete (smooth)
50.0                                                                                      Pile Tip
Note:  Mix = % of Inside material/Outside material

Group Type: 0
Top Type: 1

Water Table: 12 -ft
Ground Elevation: 0 -ft

* Soil Properties *
Zs      Gamma   Phi     C       K       E50/Dr  Nspt    Type    Soil
-ft     -lb/f3  o       -kp/f2  -lb/i3   - %
0.0     120.0   0.0     0.500   276.5   0.92    9       1       Fill
3.5     126.9   28      0.250   231.7   0.98    8       3       Alluvium
8.5     108.0   0.0     0.350   44.2    1.74    3       1       Alluvium
12.0    48.4    0.0     0.350   41.5    1.81    3       1       Alluvium
19.5    46.7    30      0.00    17.4    23.30   6       4       Alluvium
24.5    57.9    34      0.00    57.7    49.28   17      4       Alluvium
35.0    61.2    36      0.00    105.5   69.49   34      4       Alluvium

Surcharge Pressure on ground: 0 -kp/f2

* Zero Friction *
Zero Friction Start: 0 -ft      End: 3.5 -ft

* Negative Friction *
Negative Friction Start: 3.5 -ft        End: 32 -ft     with Factor: 1

ALLPILE ANALYSIS AND RESULTS:
**_____________________________________________________**

Pile Profile and Loading:
        Piletype: Drilled Shaft (dia >24 in. or 61 cm)
        Pile Length, L= 50.0 -ft
        Top Height, H= 0 -ft
        Slope Angle, As= 0
        Batter Angle, Ab= 0.00

        *To consider the influence of different soils below the pile tip, bearing stratum is defined
        from pile tip extending to 4 Diameter of pile, which is 12.0-ft (Input Page F, Item 3)

Single Pile, Vertical Analysis:
        Vertical Load with Load factor, Q= 224.0 -kp
        Vertical Load with Load factor and Pile Cap, Q= 224.0 -kp
          Load Factor for Vertical Loads= 1.0
          Vertical Loads Supported by Pile Cap: 0 %
          Kdown= 0.7      Kup= 0.4        Ka= 1.00


From Ztip=50.0 to 62.0-ft  Average Properties: Es= 543.94-kp/f2  C=0.00-kp/f2  Friction=36.00 Cp=0.14  Ksand=1.00
Limits of Max. tip resistance, q_lim= N/A
Batter Angle, Ab= 0.00    Batter Factor, Kbat= 1.00
Qtip_dw=756.6-kp  based on qult=107.0-kp/f2  and Base Area=7.1-ft2
Qtip_up=0.0-kp  and Base Area=0.0-ft2


TIP RESISTANCE (Down) CALCULATION:
Tip Depth= 50.0-ft Critical Depth Ratio Z/D= 20 Critical Depth= 60.0-ft
Equivalent Width of Tip= 3.00-ft,   Tip Area= 7.07-ft2   Tip Diameter= 3.00-ft
Bearing stratum from pile tip extending to 4 Diameter of pile. Bearing stratum= 12.00-ft
Btip: width at pile tip= 3.00-ft (For group pile, it is equivalent width).
Phi & C are average value in bearing stratum.
Batter Angle= 0.00,    Batter Factor for Tip and Side= 1.00

Ztip    Z/D     Z_lim   q_lim   Width   Area'   Phi     C       Nq      Nc      Sv      qult    Qtip_dw
-ft             -ft     -kp/f2  -ft     -ft2    - o     -kp/f2                          -kp/f2  -kp/f2  -kp
_____________________________________________________________________________________________________
50.0    20.0    60.0    N/A     3.00    7.07    36.0    0.00    30.1    9.0     3.6     107.0   756.6

 Ztip - Depth of pile tip from ground surface (Zs)
 D - Pile average diameter (below ground) for calculation of critical depth.  D=3.00-ft
 Z/D - Critical depth (for tip resistances) as ratio of depth/diameter. Vertical stress will be constant below critical depth
 Z_lim - Critical depth, calculated from Z/D (for tip resistances)
 q_lim -  Limit of Maximum tip resistance
 Btip: width or diameter at pile tip
 Bearing stratum: A stratum from  pile tip extending to some depth. Average soil properties in the stratum are used for bearing calculation


SIDE RESISTANCE (Uplift & Down) CALCULATION:
D       Z/D     Z_lim   Sf_lim  K_dw    K_up    dz
-ft             -ft     -kp/f2                  -ft
_____________________________________________________
3.00    20.0    60.00   N/A     0.7     0.4     0.100

 D - Pile average diameter for calculation of critical depth
 Z/D - Critical depth (for side resistances) as ratio of depth/diameter.  Vertical stress will be constant below critical depth
```

Z_lim - Critical depth calculated from Z/D (for side resistances)
Sf_lim - Limit of Maximum side resistance

Users Setting: Ka=1, which is constant. Ca=KcKaC=KcC

SIDE RESISTANCE (Up & Down) CALCULATION vs DEPTH:
Calculation is based on segment dZ= 0.10

Zs -ft	Prem -ft	Sv -kp/f2	Phi - o	Kf(<2) Delta	Delta - o	f_dw -kp/f2	f_up -kp/f2	C -kp/f2	Ka	Kc(<2) Ca	Ca_dw -kp/f2	Ca_up -kp/f2	Sf_dw -kp/f2	Sf_up -kp/f2	Weight -kp	Qneg -kp	Q_dw -kp	Q_up -kp	Torsion -kp-f
50.00	9.43	3.56	36.0	0.70	25.2	1.17	0.67	0.00	1.00	1.00	0.00	0.00	0.00	0.00	0.00	0.00	756.6	0.0	0.0
49.90	9.43	3.56	36.0	0.70	25.2	1.17	0.67	0.00	1.00	1.00	0.00	0.00	1.17	0.67	0.06	0.00	757.7	0.7	1.3
49.80	9.43	3.55	36.0	0.70	25.2	1.17	0.67	0.00	1.00	1.00	0.00	0.00	1.17	0.67	0.12	0.00	758.8	1.4	2.6
49.70	9.43	3.54	36.0	0.70	25.2	1.17	0.67	0.00	1.00	1.00	0.00	0.00	1.17	0.67	0.19	0.00	759.9	2.1	3.9
49.60	9.43	3.54	36.0	0.70	25.2	1.17	0.67	0.00	1.00	1.00	0.00	0.00	1.17	0.67	0.25	0.00	761.0	2.8	5.2
49.50	9.43	3.53	36.0	0.70	25.2	1.16	0.66	0.00	1.00	1.00	0.00	0.00	1.16	0.66	0.31	0.00	762.1	3.5	6.5
49.40	9.43	3.53	36.0	0.70	25.2	1.16	0.66	0.00	1.00	1.00	0.00	0.00	1.16	0.66	0.37	0.00	763.2	4.1	7.8
49.30	9.43	3.52	36.0	0.70	25.2	1.16	0.66	0.00	1.00	1.00	0.00	0.00	1.16	0.66	0.43	0.00	764.3	4.8	9.1
49.20	9.43	3.51	36.0	0.70	25.2	1.16	0.66	0.00	1.00	1.00	0.00	0.00	1.16	0.66	0.50	0.00	765.4	5.5	10.4
49.10	9.43	3.51	36.0	0.70	25.2	1.16	0.66	0.00	1.00	1.00	0.00	0.00	1.16	0.66	0.56	0.00	766.5	6.2	11.7
49.00	9.43	3.50	36.0	0.70	25.2	1.15	0.66	0.00	1.00	1.00	0.00	0.00	1.15	0.66	0.62	0.00	767.6	6.9	12.9
48.90	9.43	3.49	36.0	0.70	25.2	1.15	0.66	0.00	1.00	1.00	0.00	0.00	1.15	0.66	0.68	0.00	768.7	7.6	14.2
48.80	9.43	3.49	36.0	0.70	25.2	1.15	0.66	0.00	1.00	1.00	0.00	0.00	1.15	0.66	0.74	0.00	769.8	8.3	15.5
48.70	9.43	3.48	36.0	0.70	25.2	1.15	0.66	0.00	1.00	1.00	0.00	0.00	1.15	0.66	0.81	0.00	770.9	8.9	16.8
48.60	9.43	3.48	36.0	0.70	25.2	1.15	0.65	0.00	1.00	1.00	0.00	0.00	1.15	0.65	0.87	0.00	771.9	9.6	18.0
48.50	9.43	3.47	36.0	0.70	25.2	1.14	0.65	0.00	1.00	1.00	0.00	0.00	1.14	0.65	0.93	0.00	773.0	10.3	19.3
48.40	9.43	3.46	36.0	0.70	25.2	1.14	0.65	0.00	1.00	1.00	0.00	0.00	1.14	0.65	0.99	0.00	774.1	11.0	20.6
48.30	9.43	3.46	36.0	0.70	25.2	1.14	0.65	0.00	1.00	1.00	0.00	0.00	1.14	0.65	1.05	0.00	775.2	11.7	21.9
48.20	9.43	3.45	36.0	0.70	25.2	1.14	0.65	0.00	1.00	1.00	0.00	0.00	1.14	0.65	1.12	0.00	776.2	12.3	23.1
48.10	9.43	3.45	36.0	0.70	25.2	1.13	0.65	0.00	1.00	1.00	0.00	0.00	1.13	0.65	1.18	0.00	777.3	13.0	24.4
48.00	9.43	3.44	36.0	0.70	25.2	1.13	0.65	0.00	1.00	1.00	0.00	0.00	1.13	0.65	1.24	0.00	778.4	13.7	25.6
47.90	9.43	3.43	36.0	0.70	25.2	1.13	0.65	0.00	1.00	1.00	0.00	0.00	1.13	0.65	1.30	0.00	779.5	14.3	26.9
47.80	9.43	3.43	36.0	0.70	25.2	1.13	0.65	0.00	1.00	1.00	0.00	0.00	1.13	0.65	1.36	0.00	780.5	15.0	28.2
47.70	9.43	3.42	36.0	0.70	25.2	1.13	0.64	0.00	1.00	1.00	0.00	0.00	1.13	0.64	1.43	0.00	781.6	15.7	29.4
47.60	9.43	3.41	36.0	0.70	25.2	1.12	0.64	0.00	1.00	1.00	0.00	0.00	1.12	0.64	1.49	0.00	782.6	16.4	30.7
47.49	9.43	3.41	36.0	0.70	25.2	1.12	0.64	0.00	1.00	1.00	0.00	0.00	1.12	0.64	1.55	0.00	783.7	17.0	31.9
47.39	9.43	3.40	36.0	0.70	25.2	1.12	0.64	0.00	1.00	1.00	0.00	0.00	1.12	0.64	1.61	0.00	784.8	17.7	33.2
47.29	9.43	3.40	36.0	0.70	25.2	1.12	0.64	0.00	1.00	1.00	0.00	0.00	1.12	0.64	1.67	0.00	785.8	18.4	34.4
47.19	9.43	3.39	36.0	0.70	25.2	1.12	0.64	0.00	1.00	1.00	0.00	0.00	1.12	0.64	1.74	0.00	786.9	19.0	35.7
47.09	9.43	3.38	36.0	0.70	25.2	1.11	0.64	0.00	1.00	1.00	0.00	0.00	1.11	0.64	1.80	0.00	787.9	19.7	36.9
46.99	9.43	3.38	36.0	0.70	25.2	1.11	0.64	0.00	1.00	1.00	0.00	0.00	1.11	0.64	1.86	0.00	789.0	20.3	38.1
46.89	9.43	3.37	36.0	0.70	25.2	1.11	0.63	0.00	1.00	1.00	0.00	0.00	1.11	0.63	1.92	0.00	790.0	21.0	39.4
46.79	9.43	3.37	36.0	0.70	25.2	1.11	0.63	0.00	1.00	1.00	0.00	0.00	1.11	0.63	1.98	0.00	791.1	21.7	40.6
46.69	9.43	3.36	36.0	0.70	25.2	1.11	0.63	0.00	1.00	1.00	0.00	0.00	1.11	0.63	2.05	0.00	792.1	22.3	41.8
46.59	9.43	3.35	36.0	0.70	25.2	1.10	0.63	0.00	1.00	1.00	0.00	0.00	1.10	0.63	2.11	0.00	793.2	23.0	43.1
46.49	9.43	3.35	36.0	0.70	25.2	1.10	0.63	0.00	1.00	1.00	0.00	0.00	1.10	0.63	2.17	0.00	794.2	23.6	44.3
46.39	9.43	3.34	36.0	0.70	25.2	1.10	0.63	0.00	1.00	1.00	0.00	0.00	1.10	0.63	2.23	0.00	795.2	24.3	45.5
46.29	9.43	3.34	36.0	0.70	25.2	1.10	0.63	0.00	1.00	1.00	0.00	0.00	1.10	0.63	2.29	0.00	796.3	25.0	46.7
46.19	9.43	3.33	36.0	0.70	25.2	1.10	0.63	0.00	1.00	1.00	0.00	0.00	1.10	0.63	2.36	0.00	797.3	25.6	48.0
46.09	9.43	3.32	36.0	0.70	25.2	1.09	0.63	0.00	1.00	1.00	0.00	0.00	1.09	0.63	2.42	0.00	798.4	26.3	49.2
45.99	9.43	3.32	36.0	0.70	25.2	1.09	0.62	0.00	1.00	1.00	0.00	0.00	1.09	0.62	2.48	0.00	799.4	26.9	50.4
45.89	9.43	3.31	36.0	0.70	25.2	1.09	0.62	0.00	1.00	1.00	0.00	0.00	1.09	0.62	2.54	0.00	800.4	27.6	51.6
45.79	9.43	3.30	36.0	0.70	25.2	1.09	0.62	0.00	1.00	1.00	0.00	0.00	1.09	0.62	2.60	0.00	801.4	28.2	52.8
45.69	9.43	3.30	36.0	0.70	25.2	1.09	0.62	0.00	1.00	1.00	0.00	0.00	1.09	0.62	2.67	0.00	802.5	28.9	54.0
45.59	9.43	3.29	36.0	0.70	25.2	1.08	0.62	0.00	1.00	1.00	0.00	0.00	1.08	0.62	2.73	0.00	803.5	29.5	55.2
45.49	9.43	3.29	36.0	0.70	25.2	1.08	0.62	0.00	1.00	1.00	0.00	0.00	1.08	0.62	2.79	0.00	804.5	30.2	56.4
45.39	9.43	3.28	36.0	0.70	25.2	1.08	0.62	0.00	1.00	1.00	0.00	0.00	1.08	0.62	2.85	0.00	805.5	30.8	57.6
45.29	9.43	3.27	36.0	0.70	25.2	1.08	0.62	0.00	1.00	1.00	0.00	0.00	1.08	0.62	2.91	0.00	806.6	31.4	58.8
45.19	9.43	3.27	36.0	0.70	25.2	1.08	0.62	0.00	1.00	1.00	0.00	0.00	1.08	0.62	2.98	0.00	807.6	32.1	60.0
45.09	9.43	3.26	36.0	0.70	25.2	1.07	0.61	0.00	1.00	1.00	0.00	0.00	1.07	0.61	3.04	0.00	808.6	32.7	61.2
44.99	9.43	3.26	36.0	0.70	25.2	1.07	0.61	0.00	1.00	1.00	0.00	0.00	1.07	0.61	3.10	0.00	809.6	33.4	62.4
44.89	9.43	3.25	36.0	0.70	25.2	1.07	0.61	0.00	1.00	1.00	0.00	0.00	1.07	0.61	3.16	0.00	810.6	34.0	63.6
44.79	9.43	3.24	36.0	0.70	25.2	1.07	0.61	0.00	1.00	1.00	0.00	0.00	1.07	0.61	3.22	0.00	811.6	34.6	64.8
44.69	9.43	3.24	36.0	0.70	25.2	1.07	0.61	0.00	1.00	1.00	0.00	0.00	1.07	0.61	3.29	0.00	812.6	35.3	66.0
44.59	9.43	3.23	36.0	0.70	25.2	1.06	0.61	0.00	1.00	1.00	0.00	0.00	1.06	0.61	3.35	0.00	813.6	35.9	67.2
44.49	9.43	3.22	36.0	0.70	25.2	1.06	0.61	0.00	1.00	1.00	0.00	0.00	1.06	0.61	3.41	0.00	814.6	36.6	68.4
44.39	9.43	3.22	36.0	0.70	25.2	1.06	0.61	0.00	1.00	1.00	0.00	0.00	1.06	0.61	3.47	0.00	815.6	37.2	69.5
44.29	9.43	3.21	36.0	0.70	25.2	1.06	0.60	0.00	1.00	1.00	0.00	0.00	1.06	0.60	3.53	0.00	816.6	37.8	70.7
44.19	9.43	3.21	36.0	0.70	25.2	1.06	0.60	0.00	1.00	1.00	0.00	0.00	1.06	0.60	3.60	0.00	817.6	38.5	71.9
44.09	9.43	3.20	36.0	0.70	25.2	1.05	0.60	0.00	1.00	1.00	0.00	0.00	1.05	0.60	3.66	0.00	818.6	39.1	73.1
43.99	9.43	3.19	36.0	0.70	25.2	1.05	0.60	0.00	1.00	1.00	0.00	0.00	1.05	0.60	3.72	0.00	819.6	39.7	74.2
43.89	9.43	3.19	36.0	0.70	25.2	1.05	0.60	0.00	1.00	1.00	0.00	0.00	1.05	0.60	3.78	0.00	820.6	40.3	75.4
43.79	9.43	3.18	36.0	0.70	25.2	1.05	0.60	0.00	1.00	1.00	0.00	0.00	1.05	0.60	3.84	0.00	821.6	41.0	76.6
43.69	9.43	3.18	36.0	0.70	25.2	1.05	0.60	0.00	1.00	1.00	0.00	0.00	1.05	0.60	3.91	0.00	822.6	41.6	77.7
43.59	9.43	3.17	36.0	0.70	25.2	1.04	0.60	0.00	1.00	1.00	0.00	0.00	1.04	0.60	3.97	0.00	823.6	42.2	78.9
43.49	9.43	3.16	36.0	0.70	25.2	1.04	0.60	0.00	1.00	1.00	0.00	0.00	1.04	0.60	4.03	0.00	824.6	42.8	80.1
43.39	9.43	3.16	36.0	0.70	25.2	1.04	0.59	0.00	1.00	1.00	0.00	0.00	1.04	0.59	4.09	0.00	825.5	43.5	81.2
43.29	9.43	3.15	36.0	0.70	25.2	1.04	0.59	0.00	1.00	1.00	0.00	0.00	1.04	0.59	4.16	0.00	826.5	44.1	82.4
43.19	9.43	3.14	36.0	0.70	25.2	1.04	0.59	0.00	1.00	1.00	0.00	0.00	1.04	0.59	4.22	0.00	827.5	44.7	83.5
43.09	9.43	3.14	36.0	0.70	25.2	1.03	0.59	0.00	1.00	1.00	0.00	0.00	1.03	0.59	4.28	0.00	828.5	45.3	84.7
42.99	9.43	3.13	36.0	0.70	25.2	1.03	0.59	0.00	1.00	1.00	0.00	0.00	1.03	0.59	4.34	0.00	829.5	46.0	85.8
42.89	9.43	3.13	36.0	0.70	25.2	1.03	0.59	0.00	1.00	1.00	0.00	0.00	1.03	0.59	4.40	0.00	830.4	46.6	87.0
42.79	9.43	3.12	36.0	0.70	25.2	1.03	0.59	0.00	1.00	1.00	0.00	0.00	1.03	0.59	4.47	0.00	831.4	47.2	88.1
42.69	9.43	3.11	36.0	0.70	25.2	1.03	0.59	0.00	1.00	1.00	0.00	0.00	1.03	0.59	4.53	0.00	832.4	47.8	89.3
42.59	9.43	3.11	36.0	0.70	25.2	1.02	0.59	0.00	1.00	1.00	0.00	0.00	1.02	0.59	4.59	0.00	833.3	48.4	90.4
42.48	9.43	3.10	36.0	0.70	25.2	1.02	0.58	0.00	1.00	1.00	0.00	0.00	1.02	0.58	4.65	0.00	834.3	49.0	91.5
42.38	9.43	3.10	36.0	0.70	25.2	1.02	0.58	0.00	1.00	1.00	0.00	0.00	1.02	0.58	4.71	0.00	835.3	49.6	92.7
42.28	9.43	3.09	36.0	0.70	25.2	1.02	0.58	0.00	1.00	1.00	0.00	0.00	1.02	0.58	4.78	0.00	836.2	50.3	93.8
42.18	9.43	3.08	36.0	0.70	25.2	1.02	0.58	0.00	1.00	1.00	0.00	0.00	1.02	0.58	4.84	0.00	837.2	50.9	94.9
42.08	9.43	3.08	36.0	0.70	25.2	1.01	0.58	0.00	1.00	1.00	0.00	0.00	1.01	0.58	4.90	0.00	838.1	51.5	96.1
41.98	9.43	3.07	36.0	0.70	25.2	1.01	0.58	0.00	1.00	1.00	0.00	0.00	1.01	0.58	4.96	0.00	839.1	52.1	97.2
41.88	9.43	3.07	36.0	0.70	25.2	1.01	0.58	0.00	1.00	1.00	0.00	0.00	1.01	0.58	5.02	0.00	840.0	52.7	98.3
41.78	9.43	3.06	36.0	0.70	25.2	1.01	0.58	0.00	1.00	1.00	0.00	0.00	1.01	0.58	5.09	0.00	841.0	53.3	99.4
41.68	9.43	3.05	36.0	0.70	25.2	1.01	0.57	0.00	1.00	1.00	0.00	0.00	1.01	0.57	5.15	0.00	841.9	53.9	100.6
41.58	9.43	3.05	36.0	0.70	25.2	1.00	0.57	0.00	1.00	1.00	0.00	0.00	1.00	0.57	5.21	0.00	842.9	54.5	101.7
41.48	9.43	3.04	36.0	0.70	25.2	1.00	0.57	0.00	1.00	1.00	0.00	0.00	1.00	0.57	5.27	0.00	843.8	55.1	102.8
41.38	9.43	3.03	36.0	0.70	25.2	1.00	0.57	0.00	1.00	1.00	0.00	0.00	1.00	0.57	5.33	0.00	844.8	55.7	103.9
41.28	9.43	3.03	36.0	0.70	25.2	1.00	0.57	0.00	1.00	1.00	0.00	0.00	1.00	0.57	5.40	0.00	845.7	56.3	105.0
41.18	9.43	3.02	36.0	0.70	25.2	1.00	0.57	0.00	1.00	1.00	0.00	0.00	1.00	0.57	5.46	0.00	846.7	56.9	106.1
41.08	9.43	3.02	36.0	0.70	25.2	0.99	0.57	0.00	1.00	1.00	0.00	0.00	0.99	0.57	5.52	0.00	847.6	57.5	107.2
40.98	9.43	3.01	36.0	0.70	25.2	0.99	0.57	0.00	1.00	1.00	0.00	0.00	0.99	0.57	5.58	0.00	848.5	58.1	108.3
40.88	9.43	3.00	36.0	0.70	25.2	0.99	0.57	0.00	1.00	1.00	0.00	0.00	0.99	0.57	5.64	0.00	849.5	58.7	109.4
40.78	9.43	3.00	36.0	0.70	25.2	0.99	0.56	0.00	1.00	1.00	0.00	0.00	0.99	0.56	5.71	0.00	850.4	59.3	110.5
40.68	9.43	2.99	36.0	0.70	25.2	0.99	0.56	0.00	1.00	1.00	0.00	0.00	0.99	0.56	5.77	0.00	851.3	59.9	111.6
40.58	9.43	2.99	36.0	0.70	25.2	0.98	0.56	0.00	1.00	1.00	0.00	0.00	0.98	0.56	5.83	0.00	852.3	60.5	112.7
40.48	9.43	2.98	36.0	0.70	25.2	0.98	0.56	0.00	1.00	1.00	0.00	0.00	0.98	0.56	5.89	0.00	853.2	61.1	113.8
40.38	9.43	2.97	36.0	0.70	25.2	0.98	0.56	0.00	1.00	1.00	0.00	0.00	0.98	0.56	5.95	0.00	854.1	61.7	114.9
40.28	9.43	2.97	36.0	0.70	25.2	0.98	0.56	0.00	1.00	1.00	0.00	0.00	0.98	0.56	6.02	0.00	855.0	62.3	116.0
40.18	9.43	2.96	36.0	0.70	25.2	0.98	0.56	0.00	1.00	1.00	0.00	0.00	0.98	0.56	6.08	0.00	856.0	62.8	117.1
40.08	9.43	2.95	36.0	0.70	25.2	0.97	0.56	0.00	1.00	1.00	0.00	0.00	0.97	0.56	6.14	0.00	856.9	63.4	118.2
39.98	9.43	2.95	36.0	0.70	25.2	0.97	0.56	0.00	1.00	1.00	0.00	0.00	0.97	0.56	6.20	0.00	857.8	64.0	119.2
39.88	9.43	2.94	36.0	0.70	25.2	0.97	0.55	0.00	1.00	1.00	0.00	0.00	0.97	0.55	6.26	0.00	858.7	64.6	120.3
39.78	9.43	2.94	36.0	0.70	25.2	0.97	0.55	0.00	1.00	1.00	0.00	0.00	0.97	0.55	6.33	0.00	859.6	65.2	121.4
39.68	9.43	2.93	36.0	0.70	25.2	0.97	0.55	0.00	1.00	1.00	0.00	0.00	0.97	0.55	6.39	0.00	860.5	65.8	122.5
39.58	9.43	2.92	36.0	0.70	25.2	0.96	0.55	0.00	1.00	1.00	0.00	0.00	0.96	0.55	6.45	0.00	861.5	66.3	123.5
39.48	9.43	2.92	36.0	0.70	25.2	0.96	0.55	0.00	1.00	1.00	0.00	0.00	0.96	0.55	6.51	0.00	862.4	66.9	124.6

39.38	9.43	2.91	36.0	0.70	25.2	0.96	0.55	0.00	1.00	1.00	0.00	0.00	0.96	0.55	6.57	0.00	863.3	67.5	125.7
39.28	9.43	2.91	36.0	0.70	25.2	0.96	0.55	0.00	1.00	1.00	0.00	0.00	0.96	0.55	6.64	0.00	864.2	68.1	126.7
39.18	9.43	2.90	36.0	0.70	25.2	0.96	0.55	0.00	1.00	1.00	0.00	0.00	0.96	0.55	6.70	0.00	865.1	68.7	127.8
39.08	9.43	2.89	36.0	0.70	25.2	0.95	0.54	0.00	1.00	1.00	0.00	0.00	0.95	0.54	6.76	0.00	866.0	69.2	128.9
38.98	9.43	2.89	36.0	0.70	25.2	0.95	0.54	0.00	1.00	1.00	0.00	0.00	0.95	0.54	6.82	0.00	866.9	69.8	129.9
38.88	9.43	2.88	36.0	0.70	25.2	0.95	0.54	0.00	1.00	1.00	0.00	0.00	0.95	0.54	6.88	0.00	867.8	70.4	131.0
38.78	9.43	2.88	36.0	0.70	25.2	0.95	0.54	0.00	1.00	1.00	0.00	0.00	0.95	0.54	6.95	0.00	868.7	71.0	132.0
38.68	9.43	2.87	36.0	0.70	25.2	0.95	0.54	0.00	1.00	1.00	0.00	0.00	0.95	0.54	7.01	0.00	869.6	71.5	133.1
38.58	9.43	2.86	36.0	0.70	25.2	0.94	0.54	0.00	1.00	1.00	0.00	0.00	0.94	0.54	7.07	0.00	870.4	72.1	134.1
38.48	9.43	2.86	36.0	0.70	25.2	0.94	0.54	0.00	1.00	1.00	0.00	0.00	0.94	0.54	7.13	0.00	871.3	72.7	135.2
38.38	9.43	2.85	36.0	0.70	25.2	0.94	0.54	0.00	1.00	1.00	0.00	0.00	0.94	0.54	7.19	0.00	872.2	73.2	136.2
38.28	9.43	2.84	36.0	0.70	25.2	0.94	0.54	0.00	1.00	1.00	0.00	0.00	0.94	0.54	7.26	0.00	873.1	73.8	137.3
38.18	9.43	2.84	36.0	0.70	25.2	0.93	0.53	0.00	1.00	1.00	0.00	0.00	0.93	0.53	7.32	0.00	874.0	74.4	138.3
38.08	9.43	2.83	36.0	0.70	25.2	0.93	0.53	0.00	1.00	1.00	0.00	0.00	0.93	0.53	7.38	0.00	874.9	74.9	139.4
37.98	9.43	2.83	36.0	0.70	25.2	0.93	0.53	0.00	1.00	1.00	0.00	0.00	0.93	0.53	7.44	0.00	875.7	75.5	140.4
37.88	9.43	2.82	36.0	0.70	25.2	0.93	0.53	0.00	1.00	1.00	0.00	0.00	0.93	0.53	7.50	0.00	876.6	76.1	141.4
37.78	9.43	2.81	36.0	0.70	25.2	0.93	0.53	0.00	1.00	1.00	0.00	0.00	0.93	0.53	7.57	0.00	877.5	76.6	142.5
37.68	9.43	2.81	36.0	0.70	25.2	0.92	0.53	0.00	1.00	1.00	0.00	0.00	0.92	0.53	7.63	0.00	878.4	77.2	143.5
37.58	9.43	2.80	36.0	0.70	25.2	0.92	0.53	0.00	1.00	1.00	0.00	0.00	0.92	0.53	7.69	0.00	879.2	77.8	144.5
37.47	9.43	2.80	36.0	0.70	25.2	0.92	0.53	0.00	1.00	1.00	0.00	0.00	0.92	0.53	7.75	0.00	880.1	78.3	145.5
37.37	9.43	2.79	36.0	0.70	25.2	0.92	0.53	0.00	1.00	1.00	0.00	0.00	0.92	0.53	7.81	0.00	881.0	78.9	146.6
37.27	9.43	2.78	36.0	0.70	25.2	0.92	0.52	0.00	1.00	1.00	0.00	0.00	0.92	0.52	7.88	0.00	881.8	79.4	147.6
37.17	9.43	2.78	36.0	0.70	25.2	0.91	0.52	0.00	1.00	1.00	0.00	0.00	0.91	0.52	7.94	0.00	882.7	80.0	148.6
37.07	9.43	2.77	36.0	0.70	25.2	0.91	0.52	0.00	1.00	1.00	0.00	0.00	0.91	0.52	8.00	0.00	883.6	80.5	149.6
36.97	9.43	2.76	36.0	0.70	25.2	0.91	0.52	0.00	1.00	1.00	0.00	0.00	0.91	0.52	8.06	0.00	884.4	81.1	150.6
36.87	9.43	2.76	36.0	0.70	25.2	0.91	0.52	0.00	1.00	1.00	0.00	0.00	0.91	0.52	8.12	0.00	885.3	81.6	151.6
36.77	9.43	2.75	36.0	0.70	25.2	0.91	0.52	0.00	1.00	1.00	0.00	0.00	0.91	0.52	8.19	0.00	886.1	82.2	152.6
36.67	9.43	2.75	36.0	0.70	25.2	0.90	0.52	0.00	1.00	1.00	0.00	0.00	0.90	0.52	8.25	0.00	887.0	82.7	153.7
36.57	9.43	2.74	36.0	0.70	25.2	0.90	0.52	0.00	1.00	1.00	0.00	0.00	0.90	0.52	8.31	0.00	887.9	83.3	154.7
36.47	9.43	2.73	36.0	0.70	25.2	0.90	0.51	0.00	1.00	1.00	0.00	0.00	0.90	0.51	8.37	0.00	888.7	83.8	155.7
36.37	9.43	2.73	36.0	0.70	25.2	0.90	0.51	0.00	1.00	1.00	0.00	0.00	0.90	0.51	8.43	0.00	889.6	84.4	156.7
36.27	9.43	2.72	36.0	0.70	25.2	0.90	0.51	0.00	1.00	1.00	0.00	0.00	0.90	0.51	8.50	0.00	890.4	84.9	157.7
36.17	9.43	2.72	36.0	0.70	25.2	0.89	0.51	0.00	1.00	1.00	0.00	0.00	0.89	0.51	8.56	0.00	891.2	85.5	158.7
36.07	9.43	2.71	36.0	0.70	25.2	0.89	0.51	0.00	1.00	1.00	0.00	0.00	0.89	0.51	8.62	0.00	892.1	86.0	159.7
35.97	9.43	2.70	36.0	0.70	25.2	0.89	0.51	0.00	1.00	1.00	0.00	0.00	0.89	0.51	8.68	0.00	892.9	86.6	160.6
35.87	9.43	2.70	36.0	0.70	25.2	0.89	0.51	0.00	1.00	1.00	0.00	0.00	0.89	0.51	8.74	0.00	893.8	87.1	161.6
35.77	9.43	2.69	36.0	0.70	25.2	0.89	0.51	0.00	1.00	1.00	0.00	0.00	0.89	0.51	8.81	0.00	894.6	87.6	162.6
35.67	9.43	2.69	36.0	0.70	25.2	0.88	0.51	0.00	1.00	1.00	0.00	0.00	0.88	0.51	8.87	0.00	895.4	88.2	163.6
35.57	9.43	2.68	36.0	0.70	25.2	0.88	0.50	0.00	1.00	1.00	0.00	0.00	0.88	0.50	8.93	0.00	896.3	88.7	164.6
35.47	9.43	2.67	36.0	0.70	25.2	0.88	0.50	0.00	1.00	1.00	0.00	0.00	0.88	0.50	8.99	0.00	897.1	89.3	165.6
35.37	9.43	2.67	36.0	0.70	25.2	0.88	0.50	0.00	1.00	1.00	0.00	0.00	0.88	0.50	9.05	0.00	897.9	89.8	166.5
35.27	9.43	2.66	36.0	0.70	25.2	0.88	0.50	0.00	1.00	1.00	0.00	0.00	0.88	0.50	9.12	0.00	898.8	90.3	167.5
35.17	9.43	2.65	36.0	0.70	25.2	0.87	0.50	0.00	1.00	1.00	0.00	0.00	0.87	0.50	9.18	0.00	899.6	90.9	168.5
35.07	9.43	2.65	36.0	0.70	25.2	0.87	0.50	0.00	1.00	1.00	0.00	0.00	0.87	0.50	9.24	0.00	900.4	91.4	169.5
34.97	9.43	2.64	34.0	0.70	23.8	0.82	0.47	0.00	1.00	1.00	0.00	0.00	0.82	0.47	9.30	0.00	901.2	91.9	170.4
34.87	9.43	2.64	34.0	0.70	23.8	0.81	0.47	0.00	1.00	1.00	0.00	0.00	0.81	0.47	9.36	0.00	901.9	92.4	171.3
34.77	9.43	2.63	34.0	0.70	23.8	0.81	0.46	0.00	1.00	1.00	0.00	0.00	0.81	0.46	9.43	0.00	902.7	92.9	172.2
34.67	9.43	2.63	34.0	0.70	23.8	0.81	0.46	0.00	1.00	1.00	0.00	0.00	0.81	0.46	9.49	0.00	903.5	93.4	173.1
34.57	9.43	2.62	34.0	0.70	23.8	0.81	0.46	0.00	1.00	1.00	0.00	0.00	0.81	0.46	9.55	0.00	904.2	93.9	174.0
34.47	9.43	2.61	34.0	0.70	23.8	0.81	0.46	0.00	1.00	1.00	0.00	0.00	0.81	0.46	9.61	0.00	905.0	94.4	174.9
34.37	9.43	2.61	34.0	0.70	23.8	0.81	0.46	0.00	1.00	1.00	0.00	0.00	0.81	0.46	9.67	0.00	905.8	94.9	175.8
34.27	9.43	2.60	34.0	0.70	23.8	0.80	0.46	0.00	1.00	1.00	0.00	0.00	0.80	0.46	9.74	0.00	906.5	95.4	176.7
34.17	9.43	2.60	34.0	0.70	23.8	0.80	0.46	0.00	1.00	1.00	0.00	0.00	0.80	0.46	9.80	0.00	907.3	95.9	177.6
34.07	9.43	2.59	34.0	0.70	23.8	0.80	0.46	0.00	1.00	1.00	0.00	0.00	0.80	0.46	9.86	0.00	908.0	96.4	178.5
33.97	9.43	2.58	34.0	0.70	23.8	0.80	0.46	0.00	1.00	1.00	0.00	0.00	0.80	0.46	9.92	0.00	908.8	96.9	179.3
33.87	9.43	2.58	34.0	0.70	23.8	0.80	0.45	0.00	1.00	1.00	0.00	0.00	0.80	0.45	9.98	0.00	909.5	97.4	180.2
33.77	9.43	2.57	34.0	0.70	23.8	0.79	0.45	0.00	1.00	1.00	0.00	0.00	0.79	0.45	10.05	0.00	910.3	97.9	181.1
33.67	9.43	2.57	34.0	0.70	23.8	0.79	0.45	0.00	1.00	1.00	0.00	0.00	0.79	0.45	10.11	0.00	911.0	98.3	182.0
33.57	9.43	2.56	34.0	0.70	23.8	0.79	0.45	0.00	1.00	1.00	0.00	0.00	0.79	0.45	10.17	0.00	911.8	98.8	182.9
33.47	9.43	2.56	34.0	0.70	23.8	0.79	0.45	0.00	1.00	1.00	0.00	0.00	0.79	0.45	10.23	0.00	912.5	99.3	183.8
33.37	9.43	2.55	34.0	0.70	23.8	0.79	0.45	0.00	1.00	1.00	0.00	0.00	0.79	0.45	10.29	0.00	913.3	99.8	184.6
33.27	9.43	2.54	34.0	0.70	23.8	0.79	0.45	0.00	1.00	1.00	0.00	0.00	0.79	0.45	10.36	0.00	914.0	100.3	185.5
33.17	9.43	2.54	34.0	0.70	23.8	0.78	0.45	0.00	1.00	1.00	0.00	0.00	0.78	0.45	10.42	0.00	914.8	100.8	186.4
33.07	9.43	2.53	34.0	0.70	23.8	0.78	0.45	0.00	1.00	1.00	0.00	0.00	0.78	0.45	10.48	0.00	915.5	101.3	187.2
32.97	9.43	2.53	34.0	0.70	23.8	0.78	0.45	0.00	1.00	1.00	0.00	0.00	0.78	0.45	10.54	0.00	916.2	101.7	188.1
32.87	9.43	2.52	34.0	0.70	23.8	0.78	0.44	0.00	1.00	1.00	0.00	0.00	0.78	0.44	10.60	0.00	917.0	102.2	189.0
32.77	9.43	2.51	34.0	0.70	23.8	0.78	0.44	0.00	1.00	1.00	0.00	0.00	0.78	0.44	10.67	0.00	917.7	102.7	189.8
32.67	9.43	2.51	34.0	0.70	23.8	0.77	0.44	0.00	1.00	1.00	0.00	0.00	0.77	0.44	10.73	0.00	918.4	103.2	190.7
32.57	9.43	2.50	34.0	0.70	23.8	0.77	0.44	0.00	1.00	1.00	0.00	0.00	0.77	0.44	10.79	0.00	919.2	103.7	191.6
32.46	9.43	2.50	34.0	0.70	23.8	0.77	0.44	0.00	1.00	1.00	0.00	0.00	0.77	0.44	10.85	0.00	919.9	104.1	192.4
32.36	9.43	2.49	34.0	0.70	23.8	0.77	0.44	0.00	1.00	1.00	0.00	0.00	0.77	0.44	10.91	0.00	920.6	104.6	193.3
32.26	9.43	2.49	34.0	0.70	23.8	0.77	0.44	0.00	1.00	1.00	0.00	0.00	0.77	0.44	10.98	0.00	921.3	105.1	194.1
32.16	9.43	2.48	34.0	0.70	23.8	0.77	0.44	0.00	1.00	1.00	0.00	0.00	0.77	0.44	11.04	0.00	922.1	105.6	195.0
32.06	9.43	2.47	34.0	0.70	23.8	0.76	0.44	0.00	1.00	1.00	0.00	0.00	0.76	0.44	11.10	0.00	922.8	106.0	195.8
31.96	9.43	2.47	34.0	0.70	23.8	-0.76	0.44	0.00	1.00	1.00	0.00	0.00	-0.76	0.44	11.16	-0.72	922.1	106.5	195.6
31.86	9.43	2.46	34.0	0.70	23.8	-0.76	0.43	0.00	1.00	1.00	0.00	0.00	-0.76	0.43	11.22	-1.44	921.4	107.0	195.4
31.76	9.43	2.46	34.0	0.70	23.8	-0.76	0.43	0.00	1.00	1.00	0.00	0.00	-0.76	0.43	11.29	-2.15	920.6	107.5	195.1
31.66	9.43	2.45	34.0	0.70	23.8	-0.76	0.43	0.00	1.00	1.00	0.00	0.00	-0.76	0.43	11.35	-2.87	919.9	107.9	194.9
31.56	9.43	2.45	34.0	0.70	23.8	-0.75	0.43	0.00	1.00	1.00	0.00	0.00	-0.75	0.43	11.41	-3.58	919.2	108.4	194.7
31.46	9.43	2.44	34.0	0.70	23.8	-0.75	0.43	0.00	1.00	1.00	0.00	0.00	-0.75	0.43	11.47	-4.29	918.5	108.9	194.5
31.36	9.43	2.43	34.0	0.70	23.8	-0.75	0.43	0.00	1.00	1.00	0.00	0.00	-0.75	0.43	11.53	-5.00	917.8	109.3	194.2
31.26	9.43	2.43	34.0	0.70	23.8	-0.75	0.43	0.00	1.00	1.00	0.00	0.00	-0.75	0.43	11.60	-5.71	917.1	109.8	194.0
31.16	9.43	2.42	34.0	0.70	23.8	-0.75	0.43	0.00	1.00	1.00	0.00	0.00	-0.75	0.43	11.66	-6.42	916.4	110.3	193.8
31.06	9.43	2.42	34.0	0.70	23.8	-0.75	0.43	0.00	1.00	1.00	0.00	0.00	-0.75	0.43	11.72	-7.12	915.7	110.7	193.5
30.96	9.43	2.41	34.0	0.70	23.8	-0.74	0.43	0.00	1.00	1.00	0.00	0.00	-0.74	0.43	11.78	-7.82	915.0	111.2	193.3
30.86	9.43	2.40	34.0	0.70	23.8	-0.74	0.42	0.00	1.00	1.00	0.00	0.00	-0.74	0.42	11.84	-8.52	914.3	111.7	193.1
30.76	9.43	2.40	34.0	0.70	23.8	-0.74	0.42	0.00	1.00	1.00	0.00	0.00	-0.74	0.42	11.91	-9.22	913.6	112.1	192.9
30.66	9.43	2.39	34.0	0.70	23.8	-0.74	0.42	0.00	1.00	1.00	0.00	0.00	-0.74	0.42	11.97	-9.92	912.9	112.6	192.6
30.56	9.43	2.39	34.0	0.70	23.8	-0.74	0.42	0.00	1.00	1.00	0.00	0.00	-0.74	0.42	12.03	-10.62	912.2	113.0	192.4
30.46	9.43	2.38	34.0	0.70	23.8	-0.74	0.42	0.00	1.00	1.00	0.00	0.00	-0.74	0.42	12.09	-11.31	911.5	113.5	192.2
30.36	9.43	2.38	34.0	0.70	23.8	-0.73	0.42	0.00	1.00	1.00	0.00	0.00	-0.73	0.42	12.15	-12.00	910.8	114.0	192.0
30.26	9.43	2.37	34.0	0.70	23.8	-0.73	0.42	0.00	1.00	1.00	0.00	0.00	-0.73	0.42	12.22	-12.70	910.1	114.4	191.8
30.16	9.43	2.36	34.0	0.70	23.8	-0.73	0.42	0.00	1.00	1.00	0.00	0.00	-0.73	0.42	12.28	-13.39	909.4	114.9	191.5
30.06	9.43	2.36	34.0	0.70	23.8	-0.73	0.42	0.00	1.00	1.00	0.00	0.00	-0.73	0.42	12.34	-14.07	908.7	115.3	191.3
29.96	9.43	2.35	34.0	0.70	23.8	-0.73	0.42	0.00	1.00	1.00	0.00	0.00	-0.73	0.42	12.40	-14.76	908.0	115.8	191.1
29.86	9.43	2.35	34.0	0.70	23.8	-0.72	0.41	0.00	1.00	1.00	0.00	0.00	-0.72	0.41	12.46	-15.44	907.3	116.2	190.9
29.76	9.43	2.34	34.0	0.70	23.8	-0.72	0.41	0.00	1.00	1.00	0.00	0.00	-0.72	0.41	12.53	-16.13	906.7	116.7	190.7
29.66	9.43	2.33	34.0	0.70	23.8	-0.72	0.41	0.00	1.00	1.00	0.00	0.00	-0.72	0.41	12.59	-16.81	906.0	117.1	190.4
29.56	9.43	2.33	34.0	0.70	23.8	-0.72	0.41	0.00	1.00	1.00	0.00	0.00	-0.72	0.41	12.65	-17.49	905.3	117.6	190.2
29.46	9.43	2.32	34.0	0.70	23.8	-0.72	0.41	0.00	1.00	1.00	0.00	0.00	-0.72	0.41	12.71	-18.16	904.6	118.0	190.0
29.36	9.43	2.32	34.0	0.70	23.8	-0.72	0.41	0.00	1.00	1.00	0.00	0.00	-0.72	0.41	12.78	-18.84	903.9	118.5	189.8
29.26	9.43	2.31	34.0	0.70	23.8	-0.71	0.41	0.00	1.00	1.00	0.00	0.00	-0.71	0.41	12.84	-19.51	903.3	118.9	189.6
29.16	9.43	2.31	34.0	0.70	23.8	-0.71	0.41	0.00	1.00	1.00	0.00	0.00	-0.71	0.41	12.90	-20.18	902.6	119.4	189.3
29.06	9.43	2.30	34.0	0.70	23.8	-0.71	0.41	0.00	1.00	1.00	0.00	0.00	-0.71	0.41	12.96	-20.86	901.9	119.8	189.1
28.96	9.43	2.29	34.0	0.70	23.8	-0.71	0.40	0.00	1.00	1.00	0.00	0.00	-0.71	0.40	13.02	-21.52	901.3	120.3	188.9
28.86	9.43	2.29	34.0	0.70	23.8	-0.71	0.40	0.00	1.00	1.00	0.00	0.00	-0.71	0.40	13.09	-22.19	900.6	120.7	188.7
28.76	9.43	2.28	34.0	0.70	23.8	-0.70	0.40	0.00	1.00	1.00	0.00	0.00	-0.70	0.40	13.15	-22.86	899.9	121.2	188.5
28.66	9.43	2.28	34.0	0.70	23.8	-0.70	0.40	0.00	1.00	1.00	0.00	0.00	-0.70	0.40	13.21	-23.52	899.3	121.6	188.3
28.56	9.43	2.27	34.0	0.70	23.8	-0.70	0.40	0.00	1.00	1.00	0.00	0.00	-0.70	0.40	13.27	-24.18	898.6	122.0	188.1
28.46	9.43	2.27	34.0	0.70	23.8	-0.70	0.40	0.00	1.00	1.00	0.00	0.00	-0.70	0.40	13.33	-24.84	897.9	122.5	187.8
28.36	9.43	2.26	34.0	0.70	23.8	-0.70	0.40	0.00	1.00	1.00	0.00	0.00	-0.70	0.40	13.40	-25.50	897.3	122.9	187.6
28.26	9.43	2.25	34.0	0.70	23.8	-0.70	0.40	0.00	1.00	1.00	0.00	0.00	-0.70	0.40	13.46	-26.16	896.6	123.4	187.4
28.16	9.43	2.25	34.0	0.70	23.8	-0.69	0.40	0.00	1.00	1.00	0.00	0.00	-0.69	0.40	13.52	-26.82	896.0	123.8	187.2
28.06	9.43	2.24	34.0	0.70	23.8	-0.69	0.40	0.00	1.00	1.00	0.00	0.00	-0.69	0.40	13.58	-27.47	895.3	124.2	187.0
27.96	9.43	2.24	34.0	0.70	23.8	-0.69	0.39	0.00	1.00	1.00	0.00	0.00	-0.69	0.39	13.64	-28.12	894.7	124.7	186.8
27.86	9.43	2.23	34.0	0.70	23.8	-0.69	0.39	0.00	1.00	1.00	0.00	0.00	-0.69	0.39	13.71	-28.77	894.0	125.1	186.6
27.76	9.43	2.22	34.0	0.70	23.8	-0.69	0.39	0.00	1.00	1.00	0.00	0.00	-0.69	0.39	13.77	-29.42	893.4	125.5	186.4

27.66	9.43	2.22	34.0	0.70	23.8	-0.69	0.39	0.00	1.00	1.00	0.00	0.00	-0.69	0.39	13.83	-30.07	892.7	126.0	186.2
27.56	9.43	2.21	34.0	0.70	23.8	-0.68	0.39	0.00	1.00	1.00	0.00	0.00	-0.68	0.39	13.89	-30.71	892.1	126.4	186.0
27.45	9.43	2.21	34.0	0.70	23.8	-0.68	0.39	0.00	1.00	1.00	0.00	0.00	-0.68	0.39	13.95	-31.36	891.4	126.8	185.8
27.35	9.43	2.20	34.0	0.70	23.8	-0.68	0.39	0.00	1.00	1.00	0.00	0.00	-0.68	0.39	14.02	-32.00	890.8	127.2	185.5
27.25	9.43	2.20	34.0	0.70	23.8	-0.68	0.39	0.00	1.00	1.00	0.00	0.00	-0.68	0.39	14.08	-32.64	890.1	127.7	185.3
27.15	9.43	2.19	34.0	0.70	23.8	-0.68	0.39	0.00	1.00	1.00	0.00	0.00	-0.68	0.39	14.14	-33.28	889.5	128.1	185.1
27.05	9.43	2.18	34.0	0.70	23.8	-0.67	0.39	0.00	1.00	1.00	0.00	0.00	-0.67	0.39	14.20	-33.91	888.9	128.5	184.9
26.95	9.43	2.18	34.0	0.70	23.8	-0.67	0.38	0.00	1.00	1.00	0.00	0.00	-0.67	0.38	14.26	-34.55	888.2	129.0	184.7
26.85	9.43	2.17	34.0	0.70	23.8	-0.67	0.38	0.00	1.00	1.00	0.00	0.00	-0.67	0.38	14.33	-35.18	887.6	129.4	184.5
26.75	9.43	2.17	34.0	0.70	23.8	-0.67	0.38	0.00	1.00	1.00	0.00	0.00	-0.67	0.38	14.39	-35.81	887.0	129.8	184.3
26.65	9.43	2.16	34.0	0.70	23.8	-0.67	0.38	0.00	1.00	1.00	0.00	0.00	-0.67	0.38	14.45	-36.44	886.3	130.2	184.1
26.55	9.43	2.16	34.0	0.70	23.8	-0.67	0.38	0.00	1.00	1.00	0.00	0.00	-0.67	0.38	14.51	-37.07	885.7	130.6	183.9
26.45	9.43	2.15	34.0	0.70	23.8	-0.66	0.38	0.00	1.00	1.00	0.00	0.00	-0.66	0.38	14.57	-37.70	885.1	131.1	183.7
26.35	9.43	2.14	34.0	0.70	23.8	-0.66	0.38	0.00	1.00	1.00	0.00	0.00	-0.66	0.38	14.64	-38.32	884.5	131.5	183.5
26.25	9.43	2.14	34.0	0.70	23.8	-0.66	0.38	0.00	1.00	1.00	0.00	0.00	-0.66	0.38	14.70	-38.95	883.8	131.9	183.3
26.15	9.43	2.13	34.0	0.70	23.8	-0.66	0.38	0.00	1.00	1.00	0.00	0.00	-0.66	0.38	14.76	-39.57	883.2	132.3	183.1
26.05	9.43	2.13	34.0	0.70	23.8	-0.66	0.38	0.00	1.00	1.00	0.00	0.00	-0.66	0.38	14.82	-40.19	882.6	132.7	182.9
25.95	9.43	2.12	34.0	0.70	23.8	-0.65	0.37	0.00	1.00	1.00	0.00	0.00	-0.65	0.37	14.88	-40.81	882.0	133.1	182.7
25.85	9.43	2.11	34.0	0.70	23.8	-0.65	0.37	0.00	1.00	1.00	0.00	0.00	-0.65	0.37	14.95	-41.42	881.4	133.6	182.5
25.75	9.43	2.11	34.0	0.70	23.8	-0.65	0.37	0.00	1.00	1.00	0.00	0.00	-0.65	0.37	15.01	-42.04	880.8	134.0	182.3
25.65	9.43	2.10	34.0	0.70	23.8	-0.65	0.37	0.00	1.00	1.00	0.00	0.00	-0.65	0.37	15.07	-42.65	880.1	134.4	182.1
25.55	9.43	2.10	34.0	0.70	23.8	-0.65	0.37	0.00	1.00	1.00	0.00	0.00	-0.65	0.37	15.13	-43.26	879.5	134.8	181.9
25.45	9.43	2.09	34.0	0.70	23.8	-0.65	0.37	0.00	1.00	1.00	0.00	0.00	-0.65	0.37	15.19	-43.87	878.9	135.2	181.7
25.35	9.43	2.09	34.0	0.70	23.8	-0.64	0.37	0.00	1.00	1.00	0.00	0.00	-0.64	0.37	15.26	-44.48	878.3	135.6	181.5
25.25	9.43	2.08	34.0	0.70	23.8	-0.64	0.37	0.00	1.00	1.00	0.00	0.00	-0.64	0.37	15.32	-45.09	877.7	136.0	181.3
25.15	9.43	2.07	34.0	0.70	23.8	-0.64	0.37	0.00	1.00	1.00	0.00	0.00	-0.64	0.37	15.38	-45.69	877.1	136.4	181.1
25.05	9.43	2.07	34.0	0.70	23.8	-0.64	0.36	0.00	1.00	1.00	0.00	0.00	-0.64	0.36	15.44	-46.29	876.5	136.8	181.0
24.95	9.43	2.06	34.0	0.70	23.8	-0.64	0.36	0.00	1.00	1.00	0.00	0.00	-0.64	0.36	15.50	-46.90	875.9	137.2	180.8
24.85	9.43	2.06	34.0	0.70	23.8	-0.63	0.36	0.00	1.00	1.00	0.00	0.00	-0.63	0.36	15.57	-47.50	875.3	137.7	180.6
24.75	9.43	2.05	34.0	0.70	23.8	-0.63	0.36	0.00	1.00	1.00	0.00	0.00	-0.63	0.36	15.63	-48.09	874.7	138.1	180.4
24.65	9.43	2.04	34.0	0.70	23.8	-0.63	0.36	0.00	1.00	1.00	0.00	0.00	-0.63	0.36	15.69	-48.69	874.1	138.5	180.2
24.55	9.43	2.04	34.0	0.70	23.8	-0.63	0.36	0.00	1.00	1.00	0.00	0.00	-0.63	0.36	15.75	-49.28	873.5	138.9	180.0
24.45	9.43	2.03	30.0	0.70	21.0	-0.55	0.31	0.00	1.00	1.00	0.00	0.00	-0.55	0.31	15.81	-49.80	873.0	139.2	179.8
24.35	9.43	2.03	30.0	0.70	21.0	-0.55	0.31	0.00	1.00	1.00	0.00	0.00	-0.55	0.31	15.88	-50.32	872.5	139.6	179.7
24.25	9.43	2.03	30.0	0.70	21.0	-0.54	0.31	0.00	1.00	1.00	0.00	0.00	-0.54	0.31	15.94	-50.83	872.0	139.9	179.5
24.15	9.43	2.02	30.0	0.70	21.0	-0.54	0.31	0.00	1.00	1.00	0.00	0.00	-0.54	0.31	16.00	-51.34	871.4	140.3	179.3
24.05	9.43	2.02	30.0	0.70	21.0	-0.54	0.31	0.00	1.00	1.00	0.00	0.00	-0.54	0.31	16.06	-51.85	870.9	140.6	179.2
23.95	9.43	2.01	30.0	0.70	21.0	-0.54	0.31	0.00	1.00	1.00	0.00	0.00	-0.54	0.31	16.12	-52.36	870.4	141.0	179.0
23.85	9.43	2.01	30.0	0.70	21.0	-0.54	0.31	0.00	1.00	1.00	0.00	0.00	-0.54	0.31	16.19	-52.87	869.9	141.3	178.8
23.75	9.43	2.00	30.0	0.70	21.0	-0.54	0.31	0.00	1.00	1.00	0.00	0.00	-0.54	0.31	16.25	-53.38	869.4	141.7	178.7
23.65	9.43	2.00	30.0	0.70	21.0	-0.54	0.31	0.00	1.00	1.00	0.00	0.00	-0.54	0.31	16.31	-53.89	868.9	142.1	178.5
23.55	9.43	1.99	30.0	0.70	21.0	-0.54	0.31	0.00	1.00	1.00	0.00	0.00	-0.54	0.31	16.37	-54.39	868.4	142.4	178.4
23.45	9.43	1.99	30.0	0.70	21.0	-0.53	0.31	0.00	1.00	1.00	0.00	0.00	-0.53	0.31	16.43	-54.90	867.9	142.8	178.2
23.35	9.43	1.98	30.0	0.70	21.0	-0.53	0.30	0.00	1.00	1.00	0.00	0.00	-0.53	0.30	16.50	-55.40	867.4	143.1	178.0
23.25	9.43	1.98	30.0	0.70	21.0	-0.53	0.30	0.00	1.00	1.00	0.00	0.00	-0.53	0.30	16.56	-55.90	866.9	143.5	177.9
23.15	9.43	1.97	30.0	0.70	21.0	-0.53	0.30	0.00	1.00	1.00	0.00	0.00	-0.53	0.30	16.62	-56.40	866.4	143.8	177.7
23.05	9.43	1.97	30.0	0.70	21.0	-0.53	0.30	0.00	1.00	1.00	0.00	0.00	-0.53	0.30	16.68	-56.90	865.9	144.1	177.5
22.95	9.43	1.96	30.0	0.70	21.0	-0.53	0.30	0.00	1.00	1.00	0.00	0.00	-0.53	0.30	16.74	-57.40	865.4	144.5	177.4
22.85	9.43	1.96	30.0	0.70	21.0	-0.53	0.30	0.00	1.00	1.00	0.00	0.00	-0.53	0.30	16.81	-57.90	864.9	144.8	177.2
22.75	9.43	1.95	30.0	0.70	21.0	-0.53	0.30	0.00	1.00	1.00	0.00	0.00	-0.53	0.30	16.87	-58.39	864.4	145.2	177.1
22.65	9.43	1.95	30.0	0.70	21.0	-0.52	0.30	0.00	1.00	1.00	0.00	0.00	-0.52	0.30	16.93	-58.89	863.9	145.5	176.9
22.55	9.43	1.95	30.0	0.70	21.0	-0.52	0.30	0.00	1.00	1.00	0.00	0.00	-0.52	0.30	16.99	-59.38	863.4	145.9	176.7
22.44	9.43	1.94	30.0	0.70	21.0	-0.52	0.30	0.00	1.00	1.00	0.00	0.00	-0.52	0.30	17.05	-59.88	862.9	146.2	176.6
22.34	9.43	1.94	30.0	0.70	21.0	-0.52	0.30	0.00	1.00	1.00	0.00	0.00	-0.52	0.30	17.12	-60.37	862.4	146.6	176.4
22.24	9.43	1.93	30.0	0.70	21.0	-0.52	0.30	0.00	1.00	1.00	0.00	0.00	-0.52	0.30	17.18	-60.86	861.9	146.9	176.3
22.14	9.43	1.93	30.0	0.70	21.0	-0.52	0.30	0.00	1.00	1.00	0.00	0.00	-0.52	0.30	17.24	-61.35	861.4	147.2	176.1
22.04	9.43	1.92	30.0	0.70	21.0	-0.52	0.30	0.00	1.00	1.00	0.00	0.00	-0.52	0.30	17.30	-61.83	861.0	147.6	176.0
21.94	9.43	1.92	30.0	0.70	21.0	-0.52	0.29	0.00	1.00	1.00	0.00	0.00	-0.52	0.29	17.36	-62.32	860.5	147.9	175.8
21.84	9.43	1.91	30.0	0.70	21.0	-0.51	0.29	0.00	1.00	1.00	0.00	0.00	-0.51	0.29	17.43	-62.81	860.0	148.3	175.6
21.74	9.43	1.91	30.0	0.70	21.0	-0.51	0.29	0.00	1.00	1.00	0.00	0.00	-0.51	0.29	17.49	-63.29	859.5	148.6	175.5
21.64	9.43	1.90	30.0	0.70	21.0	-0.51	0.29	0.00	1.00	1.00	0.00	0.00	-0.51	0.29	17.55	-63.77	859.0	148.9	175.3
21.54	9.43	1.90	30.0	0.70	21.0	-0.51	0.29	0.00	1.00	1.00	0.00	0.00	-0.51	0.29	17.61	-64.25	858.5	149.3	175.2
21.44	9.43	1.89	30.0	0.70	21.0	-0.51	0.29	0.00	1.00	1.00	0.00	0.00	-0.51	0.29	17.67	-64.74	858.1	149.6	175.0
21.34	9.43	1.89	30.0	0.70	21.0	-0.51	0.29	0.00	1.00	1.00	0.00	0.00	-0.51	0.29	17.74	-65.21	857.6	150.0	174.9
21.24	9.43	1.88	30.0	0.70	21.0	-0.51	0.29	0.00	1.00	1.00	0.00	0.00	-0.51	0.29	17.80	-65.69	857.1	150.3	174.7
21.14	9.43	1.88	30.0	0.70	21.0	-0.51	0.29	0.00	1.00	1.00	0.00	0.00	-0.51	0.29	17.86	-66.17	856.6	150.6	174.6
21.04	9.43	1.88	30.0	0.70	21.0	-0.50	0.29	0.00	1.00	1.00	0.00	0.00	-0.50	0.29	17.92	-66.65	856.1	151.0	174.4
20.94	9.43	1.87	30.0	0.70	21.0	-0.50	0.29	0.00	1.00	1.00	0.00	0.00	-0.50	0.29	17.98	-67.12	855.7	151.3	174.3
20.84	9.43	1.87	30.0	0.70	21.0	-0.50	0.29	0.00	1.00	1.00	0.00	0.00	-0.50	0.29	18.05	-67.59	855.2	151.6	174.1
20.74	9.43	1.86	30.0	0.70	21.0	-0.50	0.29	0.00	1.00	1.00	0.00	0.00	-0.50	0.29	18.11	-68.07	854.7	152.0	174.0
20.64	9.43	1.86	30.0	0.70	21.0	-0.50	0.29	0.00	1.00	1.00	0.00	0.00	-0.50	0.29	18.17	-68.54	854.3	152.3	173.8
20.54	9.43	1.85	30.0	0.70	21.0	-0.50	0.28	0.00	1.00	1.00	0.00	0.00	-0.50	0.28	18.23	-69.01	853.8	152.6	173.7
20.44	9.43	1.85	30.0	0.70	21.0	-0.50	0.28	0.00	1.00	1.00	0.00	0.00	-0.50	0.28	18.29	-69.48	853.3	152.9	173.5
20.34	9.43	1.84	30.0	0.70	21.0	-0.50	0.28	0.00	1.00	1.00	0.00	0.00	-0.50	0.28	18.36	-69.94	852.8	153.3	173.4
20.24	9.43	1.84	30.0	0.70	21.0	-0.49	0.28	0.00	1.00	1.00	0.00	0.00	-0.49	0.28	18.42	-70.41	852.4	153.6	173.2
20.14	9.43	1.83	30.0	0.70	21.0	-0.49	0.28	0.00	1.00	1.00	0.00	0.00	-0.49	0.28	18.48	-70.88	851.9	153.9	173.1
20.04	9.43	1.83	30.0	0.70	21.0	-0.49	0.28	0.00	1.00	1.00	0.00	0.00	-0.49	0.28	18.54	-71.34	851.4	154.3	172.9
19.94	9.43	1.82	30.0	0.70	21.0	-0.49	0.28	0.00	1.00	1.00	0.00	0.00	-0.49	0.28	18.60	-71.80	851.0	154.6	172.8
19.84	9.43	1.82	30.0	0.70	21.0	-0.49	0.28	0.00	1.00	1.00	0.00	0.00	-0.49	0.28	18.67	-72.26	850.5	154.9	172.6
19.74	9.43	1.81	30.0	0.70	21.0	-0.49	0.28	0.00	1.00	1.00	0.00	0.00	-0.49	0.28	18.73	-72.72	850.1	155.2	172.5
19.64	9.43	1.81	30.0	0.70	21.0	-0.49	0.28	0.00	1.00	1.00	0.00	0.00	-0.49	0.28	18.79	-73.18	849.6	155.6	172.3
19.54	9.43	1.81	30.0	0.70	21.0	-0.49	0.28	0.00	1.00	1.00	0.00	0.00	-0.49	0.28	18.85	-73.64	849.1	155.9	172.2
19.44	9.43	1.80	0.0	0.70	0.0	0.00	0.00	0.35	1.00	1.00	-0.35	0.35	-0.35	0.35	18.91	-73.97	848.8	156.3	172.2
19.34	9.43	1.80	0.0	0.70	0.0	0.00	0.00	0.35	1.00	1.00	-0.35	0.35	-0.35	0.35	18.98	-74.30	848.5	156.7	172.2
19.24	9.43	1.79	0.0	0.70	0.0	0.00	0.00	0.35	1.00	1.00	-0.35	0.35	-0.35	0.35	19.04	-74.63	848.2	157.1	172.2
19.14	9.43	1.79	0.0	0.70	0.0	0.00	0.00	0.35	1.00	1.00	-0.35	0.35	-0.35	0.35	19.10	-74.96	847.8	157.5	172.2
19.04	9.43	1.78	0.0	0.70	0.0	0.00	0.00	0.35	1.00	1.00	-0.35	0.35	-0.35	0.35	19.16	-75.29	847.5	157.8	172.2
18.94	9.43	1.78	0.0	0.70	0.0	0.00	0.00	0.35	1.00	1.00	-0.35	0.35	-0.35	0.35	19.22	-75.63	847.2	158.2	172.2
18.84	9.43	1.77	0.0	0.70	0.0	0.00	0.00	0.35	1.00	1.00	-0.35	0.35	-0.35	0.35	19.29	-75.96	846.8	158.6	172.2
18.74	9.43	1.77	0.0	0.70	0.0	0.00	0.00	0.35	1.00	1.00	-0.35	0.35	-0.35	0.35	19.35	-76.29	846.5	159.0	172.2
18.64	9.43	1.76	0.0	0.70	0.0	0.00	0.00	0.35	1.00	1.00	-0.35	0.35	-0.35	0.35	19.41	-76.62	846.2	159.4	172.2
18.54	9.43	1.76	0.0	0.70	0.0	0.00	0.00	0.35	1.00	1.00	-0.35	0.35	-0.35	0.35	19.47	-76.95	845.8	159.8	172.2
18.44	9.43	1.75	0.0	0.70	0.0	0.00	0.00	0.35	1.00	1.00	-0.35	0.35	-0.35	0.35	19.53	-77.28	845.5	160.2	172.2
18.34	9.43	1.75	0.0	0.70	0.0	0.00	0.00	0.35	1.00	1.00	-0.35	0.35	-0.35	0.35	19.60	-77.61	845.2	160.6	172.2
18.24	9.43	1.74	0.0	0.70	0.0	0.00	0.00	0.35	1.00	1.00	-0.35	0.35	-0.35	0.35	19.66	-77.94	844.8	161.0	172.2
18.14	9.43	1.74	0.0	0.70	0.0	0.00	0.00	0.35	1.00	1.00	-0.35	0.35	-0.35	0.35	19.72	-78.27	844.5	161.4	172.2
18.04	9.43	1.73	0.0	0.70	0.0	0.00	0.00	0.35	1.00	1.00	-0.35	0.35	-0.35	0.35	19.78	-78.60	844.2	161.8	172.2
17.94	9.43	1.73	0.0	0.70	0.0	0.00	0.00	0.35	1.00	1.00	-0.35	0.35	-0.35	0.35	19.84	-78.93	843.9	162.2	172.2
17.84	9.43	1.72	0.0	0.70	0.0	0.00	0.00	0.35	1.00	1.00	-0.35	0.35	-0.35	0.35	19.91	-79.26	843.5	162.6	172.2
17.74	9.43	1.72	0.0	0.70	0.0	0.00	0.00	0.35	1.00	1.00	-0.35	0.35	-0.35	0.35	19.97	-79.59	843.2	162.9	172.2
17.64	9.43	1.71	0.0	0.70	0.0	0.00	0.00	0.35	1.00	1.00	-0.35	0.35	-0.35	0.35	20.03	-79.92	842.9	163.3	172.2
17.54	9.43	1.71	0.0	0.70	0.0	0.00	0.00	0.35	1.00	1.00	-0.35	0.35	-0.35	0.35	20.09	-80.25	842.5	163.7	172.2
17.43	9.43	1.70	0.0	0.70	0.0	0.00	0.00	0.35	1.00	1.00	-0.35	0.35	-0.35	0.35	20.15	-80.58	842.2	164.1	172.2
17.33	9.43	1.70	0.0	0.70	0.0	0.00	0.00	0.35	1.00	1.00	-0.35	0.35	-0.35	0.35	20.22	-80.91	841.9	164.5	172.2
17.23	9.43	1.69	0.0	0.70	0.0	0.00	0.00	0.35	1.00	1.00	-0.35	0.35	-0.35	0.35	20.28	-81.24	841.5	164.9	172.2
17.13	9.43	1.69	0.0	0.70	0.0	0.00	0.00	0.35	1.00	1.00	-0.35	0.35	-0.35	0.35	20.34	-81.57	841.2	165.3	172.2
17.03	9.43	1.68	0.0	0.70	0.0	0.00	0.00	0.35	1.00	1.00	-0.35	0.35	-0.35	0.35	20.40	-81.91	840.9	165.7	172.2
16.93	9.43	1.68	0.0	0.70	0.0	0.00	0.00	0.35	1.00	1.00	-0.35	0.35	-0.35	0.35	20.46	-82.24	840.6	166.1	172.2
16.83	9.43	1.67	0.0	0.70	0.0	0.00	0.00	0.35	1.00	1.00	-0.35	0.35	-0.35	0.35	20.53	-82.57	840.2	166.5	172.2
16.73	9.43	1.67	0.0	0.70	0.0	0.00	0.00	0.35	1.00	1.00	-0.35	0.35	-0.35	0.35	20.59	-82.90	839.9	166.9	172.2
16.63	9.43	1.66	0.0	0.70	0.0	0.00	0.00	0.35	1.00	1.00	-0.35	0.35	-0.35	0.35	20.65	-83.23	839.6	167.3	172.2
16.53	9.43	1.66	0.0	0.70	0.0	0.00	0.00	0.35	1.00	1.00	-0.35	0.35	-0.35	0.35	20.71	-83.56	839.2	167.7	172.2
16.43	9.43	1.65	0.0	0.70	0.0	0.00	0.00	0.35	1.00	1.00	-0.35	0.35	-0.35	0.35	20.78	-83.89	838.9	168.1	172.2
16.33	9.43	1.65	0.0	0.70	0.0	0.00	0.00	0.35	1.00	1.00	-0.35	0.35	-0.35	0.35	20.84	-84.22	838.6	168.4	172.2
16.23	9.43	1.65	0.0	0.70	0.0	0.00	0.00	0.35	1.00	1.00	-0.35	0.35	-0.35	0.35	20.90	-84.55	838.2	168.8	172.2
16.13	9.43	1.64	0.0	0.70	0.0	0.00	0.00	0.35	1.00	1.00	-0.35	0.35	-0.35	0.35	20.96	-84.88	837.9	169.2	172.2
16.03	9.43	1.64	0.0	0.70	0.0	0.00	0.00	0.35	1.00	1.00	-0.35	0.35	-0.35	0.35	21.02	-85.21	837.6	169.6	172.2

15.93	9.43	1.63	0.0	0.70	0.0	0.00	0.00	0.35	1.00	1.00	-0.35	0.35	-0.35	0.35	21.09	-85.54	837.2	170.0	172.2
15.83	9.43	1.63	0.0	0.70	0.0	0.00	0.00	0.35	1.00	1.00	-0.35	0.35	-0.35	0.35	21.15	-85.87	836.9	170.4	172.2
15.73	9.43	1.62	0.0	0.70	0.0	0.00	0.00	0.35	1.00	1.00	-0.35	0.35	-0.35	0.35	21.21	-86.20	836.6	170.8	172.2
15.63	9.43	1.62	0.0	0.70	0.0	0.00	0.00	0.35	1.00	1.00	-0.35	0.35	-0.35	0.35	21.27	-86.53	836.3	171.2	172.2
15.53	9.43	1.61	0.0	0.70	0.0	0.00	0.00	0.35	1.00	1.00	-0.35	0.35	-0.35	0.35	21.33	-86.86	835.9	171.6	172.2
15.43	9.43	1.61	0.0	0.70	0.0	0.00	0.00	0.35	1.00	1.00	-0.35	0.35	-0.35	0.35	21.40	-87.19	835.6	172.0	172.2
15.33	9.43	1.60	0.0	0.70	0.0	0.00	0.00	0.35	1.00	1.00	-0.35	0.35	-0.35	0.35	21.46	-87.52	835.3	172.4	172.2
15.23	9.43	1.60	0.0	0.70	0.0	0.00	0.00	0.35	1.00	1.00	-0.35	0.35	-0.35	0.35	21.52	-87.85	834.9	172.8	172.2
15.13	9.43	1.59	0.0	0.70	0.0	0.00	0.00	0.35	1.00	1.00	-0.35	0.35	-0.35	0.35	21.58	-88.19	834.6	173.2	172.2
15.03	9.43	1.59	0.0	0.70	0.0	0.00	0.00	0.35	1.00	1.00	-0.35	0.35	-0.35	0.35	21.64	-88.52	834.3	173.5	172.2
14.93	9.43	1.58	0.0	0.70	0.0	0.00	0.00	0.35	1.00	1.00	-0.35	0.35	-0.35	0.35	21.71	-88.85	833.9	173.9	172.2
14.83	9.43	1.58	0.0	0.70	0.0	0.00	0.00	0.35	1.00	1.00	-0.35	0.35	-0.35	0.35	21.77	-89.18	833.6	174.3	172.2
14.73	9.43	1.57	0.0	0.70	0.0	0.00	0.00	0.35	1.00	1.00	-0.35	0.35	-0.35	0.35	21.83	-89.51	833.3	174.7	172.2
14.63	9.43	1.57	0.0	0.70	0.0	0.00	0.00	0.35	1.00	1.00	-0.35	0.35	-0.35	0.35	21.89	-89.84	832.9	175.1	172.2
14.53	9.43	1.56	0.0	0.70	0.0	0.00	0.00	0.35	1.00	1.00	-0.35	0.35	-0.35	0.35	21.95	-90.17	832.6	175.5	172.2
14.43	9.43	1.56	0.0	0.70	0.0	0.00	0.00	0.35	1.00	1.00	-0.35	0.35	-0.35	0.35	22.02	-90.50	832.3	175.9	172.2
14.33	9.43	1.55	0.0	0.70	0.0	0.00	0.00	0.35	1.00	1.00	-0.35	0.35	-0.35	0.35	22.08	-90.83	832.0	176.3	172.2
14.23	9.43	1.55	0.0	0.70	0.0	0.00	0.00	0.35	1.00	1.00	-0.35	0.35	-0.35	0.35	22.14	-91.16	831.6	176.7	172.2
14.13	9.43	1.54	0.0	0.70	0.0	0.00	0.00	0.35	1.00	1.00	-0.35	0.35	-0.35	0.35	22.20	-91.49	831.3	177.1	172.2
14.03	9.43	1.54	0.0	0.70	0.0	0.00	0.00	0.35	1.00	1.00	-0.35	0.35	-0.35	0.35	22.26	-91.82	831.0	177.5	172.2
13.93	9.43	1.53	0.0	0.70	0.0	0.00	0.00	0.35	1.00	1.00	-0.35	0.35	-0.35	0.35	22.33	-92.15	830.6	177.9	172.2
13.83	9.43	1.53	0.0	0.70	0.0	0.00	0.00	0.35	1.00	1.00	-0.35	0.35	-0.35	0.35	22.39	-92.48	830.3	178.3	172.2
13.73	9.43	1.52	0.0	0.70	0.0	0.00	0.00	0.35	1.00	1.00	-0.35	0.35	-0.35	0.35	22.45	-92.81	830.0	178.6	172.2
13.63	9.43	1.52	0.0	0.70	0.0	0.00	0.00	0.35	1.00	1.00	-0.35	0.35	-0.35	0.35	22.51	-93.14	829.6	179.0	172.2
13.53	9.43	1.51	0.0	0.70	0.0	0.00	0.00	0.35	1.00	1.00	-0.35	0.35	-0.35	0.35	22.57	-93.47	829.3	179.4	172.2
13.43	9.43	1.51	0.0	0.70	0.0	0.00	0.00	0.35	1.00	1.00	-0.35	0.35	-0.35	0.35	22.64	-93.80	829.0	179.8	172.2
13.33	9.43	1.50	0.0	0.70	0.0	0.00	0.00	0.35	1.00	1.00	-0.35	0.35	-0.35	0.35	22.70	-94.14	828.7	180.2	172.2
13.23	9.43	1.50	0.0	0.70	0.0	0.00	0.00	0.35	1.00	1.00	-0.35	0.35	-0.35	0.35	22.76	-94.47	828.3	180.6	172.2
13.13	9.43	1.49	0.0	0.70	0.0	0.00	0.00	0.35	1.00	1.00	-0.35	0.35	-0.35	0.35	22.82	-94.80	828.0	181.0	172.2
13.03	9.43	1.49	0.0	0.70	0.0	0.00	0.00	0.35	1.00	1.00	-0.35	0.35	-0.35	0.35	22.88	-95.13	827.7	181.4	172.2
12.93	9.43	1.49	0.0	0.70	0.0	0.00	0.00	0.35	1.00	1.00	-0.35	0.35	-0.35	0.35	22.95	-95.46	827.3	181.8	172.2
12.83	9.43	1.48	0.0	0.70	0.0	0.00	0.00	0.35	1.00	1.00	-0.35	0.35	-0.35	0.35	23.01	-95.79	827.0	182.2	172.2
12.73	9.43	1.48	0.0	0.70	0.0	0.00	0.00	0.35	1.00	1.00	-0.35	0.35	-0.35	0.35	23.07	-96.12	826.7	182.6	172.2
12.63	9.43	1.47	0.0	0.70	0.0	0.00	0.00	0.35	1.00	1.00	-0.35	0.35	-0.35	0.35	23.13	-96.45	826.3	183.0	172.2
12.53	9.43	1.47	0.0	0.70	0.0	0.00	0.00	0.35	1.00	1.00	-0.35	0.35	-0.35	0.35	23.19	-96.78	826.0	183.4	172.2
12.42	9.43	1.46	0.0	0.70	0.0	0.00	0.00	0.35	1.00	1.00	-0.35	0.35	-0.35	0.35	23.26	-97.11	825.7	183.8	172.2
12.32	9.43	1.46	0.0	0.70	0.0	0.00	0.00	0.35	1.00	1.00	-0.35	0.35	-0.35	0.35	23.32	-97.44	825.3	184.1	172.2
12.22	9.43	1.45	0.0	0.70	0.0	0.00	0.00	0.35	1.00	1.00	-0.35	0.35	-0.35	0.35	23.38	-97.77	825.0	184.5	172.2
12.12	9.43	1.45	0.0	0.70	0.0	0.00	0.00	0.35	1.00	1.00	-0.35	0.35	-0.35	0.35	23.44	-98.10	824.7	184.9	172.2
12.02	9.43	1.44	0.0	0.70	0.0	0.00	0.00	0.35	1.00	1.00	-0.35	0.35	-0.35	0.35	23.50	-98.43	824.4	185.3	172.2
11.92	9.43	1.43	0.0	0.70	0.0	0.00	0.00	0.35	1.00	1.00	-0.35	0.35	-0.35	0.35	23.61	-98.76	824.0	185.8	172.2
11.82	9.43	1.42	0.0	0.70	0.0	0.00	0.00	0.35	1.00	1.00	-0.35	0.35	-0.35	0.35	23.72	-99.09	823.7	186.2	172.2
11.72	9.43	1.41	0.0	0.70	0.0	0.00	0.00	0.35	1.00	1.00	-0.35	0.35	-0.35	0.35	23.82	-99.42	823.4	186.6	172.2
11.62	9.43	1.40	0.0	0.70	0.0	0.00	0.00	0.35	1.00	1.00	-0.35	0.35	-0.35	0.35	23.93	-99.75	823.0	187.1	172.2
11.52	9.43	1.39	0.0	0.70	0.0	0.00	0.00	0.35	1.00	1.00	-0.35	0.35	-0.35	0.35	24.03	-100.08	822.7	187.5	172.2
11.42	9.43	1.38	0.0	0.70	0.0	0.00	0.00	0.35	1.00	1.00	-0.35	0.35	-0.35	0.35	24.14	-100.42	822.4	187.9	172.2
11.32	9.43	1.37	0.0	0.70	0.0	0.00	0.00	0.35	1.00	1.00	-0.35	0.35	-0.35	0.35	24.25	-100.75	822.0	188.4	172.2
11.22	9.43	1.35	0.0	0.70	0.0	0.00	0.00	0.35	1.00	1.00	-0.35	0.35	-0.35	0.35	24.35	-101.08	821.7	188.8	172.2
11.12	9.43	1.34	0.0	0.70	0.0	0.00	0.00	0.35	1.00	1.00	-0.35	0.35	-0.35	0.35	24.46	-101.41	821.4	189.3	172.2
11.02	9.43	1.33	0.0	0.70	0.0	0.00	0.00	0.35	1.00	1.00	-0.35	0.35	-0.35	0.35	24.57	-101.74	821.0	189.7	172.2
10.92	9.43	1.32	0.0	0.70	0.0	0.00	0.00	0.35	1.00	1.00	-0.35	0.35	-0.35	0.35	24.67	-102.07	820.7	190.1	172.2
10.82	9.43	1.31	0.0	0.70	0.0	0.00	0.00	0.35	1.00	1.00	-0.35	0.35	-0.35	0.35	24.78	-102.40	820.4	190.6	172.2
10.72	9.43	1.30	0.0	0.70	0.0	0.00	0.00	0.35	1.00	1.00	-0.35	0.35	-0.35	0.35	24.88	-102.73	820.1	191.0	172.2
10.62	9.43	1.29	0.0	0.70	0.0	0.00	0.00	0.35	1.00	1.00	-0.35	0.35	-0.35	0.35	24.99	-103.06	819.7	191.4	172.2
10.52	9.43	1.28	0.0	0.70	0.0	0.00	0.00	0.35	1.00	1.00	-0.35	0.35	-0.35	0.35	25.10	-103.39	819.4	191.9	172.2
10.42	9.43	1.27	0.0	0.70	0.0	0.00	0.00	0.35	1.00	1.00	-0.35	0.35	-0.35	0.35	25.20	-103.72	819.1	192.3	172.2
10.32	9.43	1.26	0.0	0.70	0.0	0.00	0.00	0.35	1.00	1.00	-0.35	0.35	-0.35	0.35	25.31	-104.05	818.7	192.7	172.2
10.22	9.43	1.25	0.0	0.70	0.0	0.00	0.00	0.35	1.00	1.00	-0.35	0.35	-0.35	0.35	25.42	-104.38	818.4	193.2	172.2
10.12	9.43	1.24	0.0	0.70	0.0	0.00	0.00	0.35	1.00	1.00	-0.35	0.35	-0.35	0.35	25.52	-104.71	818.1	193.6	172.2
10.02	9.43	1.22	0.0	0.70	0.0	0.00	0.00	0.35	1.00	1.00	-0.35	0.35	-0.35	0.35	25.63	-105.04	817.7	194.1	172.2
9.92	9.43	1.21	0.0	0.70	0.0	0.00	0.00	0.35	1.00	1.00	-0.35	0.35	-0.35	0.35	25.73	-105.37	817.4	194.5	172.2
9.82	9.43	1.20	0.0	0.70	0.0	0.00	0.00	0.35	1.00	1.00	-0.35	0.35	-0.35	0.35	25.84	-105.70	817.1	194.9	172.2
9.72	9.43	1.19	0.0	0.70	0.0	0.00	0.00	0.35	1.00	1.00	-0.35	0.35	-0.35	0.35	25.95	-106.03	816.8	195.4	172.2
9.62	9.43	1.18	0.0	0.70	0.0	0.00	0.00	0.35	1.00	1.00	-0.35	0.35	-0.35	0.35	26.05	-106.36	816.4	195.8	172.2
9.52	9.43	1.17	0.0	0.70	0.0	0.00	0.00	0.35	1.00	1.00	-0.35	0.35	-0.35	0.35	26.16	-106.70	816.1	196.2	172.2
9.42	9.43	1.16	0.0	0.70	0.0	0.00	0.00	0.35	1.00	1.00	-0.35	0.35	-0.35	0.35	26.27	-107.03	815.8	196.7	172.2
9.32	9.43	1.15	0.0	0.70	0.0	0.00	0.00	0.35	1.00	1.00	-0.35	0.35	-0.35	0.35	26.37	-107.36	815.4	197.1	172.2
9.22	9.43	1.14	0.0	0.70	0.0	0.00	0.00	0.35	1.00	1.00	-0.35	0.35	-0.35	0.35	26.48	-107.69	815.1	197.6	172.2
9.12	9.43	1.13	0.0	0.70	0.0	0.00	0.00	0.35	1.00	1.00	-0.35	0.35	-0.35	0.35	26.58	-108.02	814.8	198.0	172.2
9.02	9.43	1.12	0.0	0.70	0.0	0.00	0.00	0.35	1.00	1.00	-0.35	0.35	-0.35	0.35	26.69	-108.35	814.4	198.4	172.2
8.92	9.43	1.11	0.0	0.70	0.0	0.00	0.00	0.35	1.00	1.00	-0.35	0.35	-0.35	0.35	26.80	-108.68	814.1	198.9	172.2
8.82	9.43	1.10	0.0	0.70	0.0	0.00	0.00	0.35	1.00	1.00	-0.35	0.35	-0.35	0.35	26.90	-109.01	813.8	199.3	172.2
8.72	9.43	1.08	0.0	0.70	0.0	0.00	0.00	0.35	1.00	1.00	-0.35	0.35	-0.35	0.35	27.01	-109.34	813.4	199.7	172.2
8.62	9.43	1.07	0.0	0.70	0.0	0.00	0.00	0.35	1.00	1.00	-0.35	0.35	-0.35	0.35	27.11	-109.67	813.1	200.2	172.2
8.52	9.43	1.06	0.0	0.70	0.0	0.00	0.00	0.35	1.00	1.00	-0.35	0.35	-0.35	0.35	27.22	-110.00	812.8	200.6	172.2
8.42	9.43	1.05	28.0	0.70	19.6	-0.26	0.15	0.25	1.00	1.00	-0.25	0.25	-0.51	0.40	27.33	-110.48	812.3	201.1	172.1
8.32	9.43	1.04	28.0	0.70	19.6	-0.26	0.15	0.25	1.00	1.00	-0.25	0.25	-0.51	0.40	27.43	-110.96	811.8	201.6	172.0
8.22	9.43	1.02	28.0	0.70	19.6	-0.26	0.15	0.25	1.00	1.00	-0.25	0.25	-0.51	0.40	27.54	-111.44	811.3	202.1	171.9
8.12	9.43	1.01	28.0	0.70	19.6	-0.25	0.14	0.25	1.00	1.00	-0.25	0.25	-0.50	0.39	27.65	-111.92	810.9	202.5	171.9
8.02	9.43	1.00	28.0	0.70	19.6	-0.25	0.14	0.25	1.00	1.00	-0.25	0.25	-0.50	0.39	27.75	-112.39	810.4	203.0	171.8
7.92	9.43	0.99	28.0	0.70	19.6	-0.25	0.14	0.25	1.00	1.00	-0.25	0.25	-0.50	0.39	27.86	-112.86	809.9	203.5	171.7
7.82	9.43	0.97	28.0	0.70	19.6	-0.24	0.14	0.25	1.00	1.00	-0.25	0.25	-0.49	0.39	27.96	-113.32	809.5	204.0	171.6
7.72	9.43	0.96	28.0	0.70	19.6	-0.24	0.14	0.25	1.00	1.00	-0.25	0.25	-0.49	0.39	28.07	-113.78	809.0	204.4	171.6
7.62	9.43	0.95	28.0	0.70	19.6	-0.24	0.14	0.25	1.00	1.00	-0.25	0.25	-0.49	0.39	28.18	-114.24	808.5	204.9	171.5
7.52	9.43	0.94	28.0	0.70	19.6	-0.23	0.13	0.25	1.00	1.00	-0.25	0.25	-0.48	0.38	28.28	-114.70	808.1	205.4	171.4
7.41	9.43	0.92	28.0	0.70	19.6	-0.23	0.13	0.25	1.00	1.00	-0.25	0.25	-0.48	0.38	28.39	-115.15	807.6	205.8	171.3
7.31	9.43	0.91	28.0	0.70	19.6	-0.23	0.13	0.25	1.00	1.00	-0.25	0.25	-0.48	0.38	28.50	-115.60	807.2	206.3	171.3
7.21	9.43	0.90	28.0	0.70	19.6	-0.22	0.13	0.25	1.00	1.00	-0.25	0.25	-0.47	0.38	28.60	-116.05	806.7	206.8	171.2
7.11	9.43	0.88	28.0	0.70	19.6	-0.22	0.13	0.25	1.00	1.00	-0.25	0.25	-0.47	0.38	28.71	-116.49	806.3	207.2	171.1
7.01	9.43	0.87	28.0	0.70	19.6	-0.22	0.12	0.25	1.00	1.00	-0.25	0.25	-0.47	0.37	28.81	-116.94	805.8	207.7	171.1
6.91	9.43	0.86	28.0	0.70	19.6	-0.21	0.12	0.25	1.00	1.00	-0.25	0.25	-0.46	0.37	28.92	-117.37	805.4	208.1	171.0
6.81	9.43	0.85	28.0	0.70	19.6	-0.21	0.12	0.25	1.00	1.00	-0.25	0.25	-0.46	0.37	29.03	-117.81	805.0	208.6	170.9
6.71	9.43	0.83	28.0	0.70	19.6	-0.21	0.12	0.25	1.00	1.00	-0.25	0.25	-0.46	0.37	29.13	-118.24	804.5	209.1	170.9
6.61	9.43	0.82	28.0	0.70	19.6	-0.20	0.12	0.25	1.00	1.00	-0.25	0.25	-0.45	0.37	29.24	-118.67	804.1	209.5	170.8
6.51	9.43	0.81	28.0	0.70	19.6	-0.20	0.12	0.25	1.00	1.00	-0.25	0.25	-0.45	0.37	29.35	-119.10	803.7	210.0	170.8
6.41	9.43	0.80	28.0	0.70	19.6	-0.20	0.11	0.25	1.00	1.00	-0.25	0.25	-0.45	0.36	29.45	-119.52	803.3	210.4	170.7
6.31	9.43	0.78	28.0	0.70	19.6	-0.20	0.11	0.25	1.00	1.00	-0.25	0.25	-0.44	0.36	29.56	-119.94	802.8	210.9	170.6
6.21	9.43	0.77	28.0	0.70	19.6	-0.19	0.11	0.25	1.00	1.00	-0.25	0.25	-0.44	0.36	29.66	-120.36	802.4	211.3	170.6
6.11	9.43	0.76	28.0	0.70	19.6	-0.19	0.11	0.25	1.00	1.00	-0.25	0.25	-0.44	0.36	29.77	-120.77	802.0	211.7	170.5
6.01	9.43	0.74	28.0	0.70	19.6	-0.19	0.11	0.25	1.00	1.00	-0.25	0.25	-0.44	0.36	29.88	-121.18	801.6	212.2	170.5
5.91	9.43	0.73	28.0	0.70	19.6	-0.18	0.10	0.25	1.00	1.00	-0.25	0.25	-0.43	0.35	29.98	-121.59	801.2	212.6	170.4
5.81	9.43	0.72	28.0	0.70	19.6	-0.18	0.10	0.25	1.00	1.00	-0.25	0.25	-0.43	0.35	30.09	-122.00	800.8	213.1	170.4
5.71	9.43	0.71	28.0	0.70	19.6	-0.18	0.10	0.25	1.00	1.00	-0.25	0.25	-0.43	0.35	30.20	-122.40	800.4	213.5	170.3
5.61	9.43	0.69	28.0	0.70	19.6	-0.17	0.10	0.25	1.00	1.00	-0.25	0.25	-0.42	0.35	30.30	-122.80	800.0	213.9	170.3
5.51	9.43	0.68	28.0	0.70	19.6	-0.17	0.10	0.25	1.00	1.00	-0.25	0.25	-0.42	0.35	30.41	-123.20	799.6	214.4	170.2
5.41	9.43	0.67	28.0	0.70	19.6	-0.17	0.10	0.25	1.00	1.00	-0.25	0.25	-0.42	0.35	30.51	-123.59	799.2	214.8	170.1
5.31	9.43	0.66	28.0	0.70	19.6	-0.16	0.09	0.25	1.00	1.00	-0.25	0.25	-0.41	0.34	30.62	-123.98	798.8	215.2	170.1
5.21	9.43	0.64	28.0	0.70	19.6	-0.16	0.09	0.25	1.00	1.00	-0.25	0.25	-0.41	0.34	30.73	-124.37	798.4	215.7	170.1
5.11	9.43	0.63	28.0	0.70	19.6	-0.16	0.09	0.25	1.00	1.00	-0.25	0.25	-0.41	0.34	30.83	-124.75	798.0	216.1	170.0
5.01	9.43	0.62	28.0	0.70	19.6	-0.15	0.09	0.25	1.00	1.00	-0.25	0.25	-0.40	0.34	30.94	-125.13	797.7	216.5	170.0
4.91	9.43	0.60	28.0	0.70	19.6	-0.15	0.09	0.25	1.00	1.00	-0.25	0.25	-0.40	0.34	31.04	-125.51	797.3	216.9	169.9
4.81	9.43	0.59	28.0	0.70	19.6	-0.15	0.08	0.25	1.00	1.00	-0.25	0.25	-0.40	0.33	31.15	-125.89	796.9	217.4	169.9
4.71	9.43	0.58	28.0	0.70	19.6	-0.14	0.08	0.25	1.00	1.00	-0.25	0.25	-0.39	0.33	31.26	-126.26	796.5	217.8	169.8
4.61	9.43	0.57	28.0	0.70	19.6	-0.14	0.08	0.25	1.00	1.00	-0.25	0.25	-0.39	0.33	31.36	-126.63	796.2	218.2	169.8
4.51	9.43	0.55	28.0	0.70	19.6	-0.14	0.08	0.25	1.00	1.00	-0.25	0.25	-0.39	0.33	31.47	-127.00	795.8	218.6	169.7
4.41	9.43	0.54	28.0	0.70	19.6	-0.13	0.08	0.25	1.00	1.00	-0.25	0.25	-0.38	0.33	31.58	-127.36	795.4	219.0	169.7
4.31	9.43	0.53	28.0	0.70	19.6	-0.13	0.08	0.25	1.00	1.00	-0.25	0.25	-0.38	0.33	31.68	-127.72	795.1	219.4	169.7

4.21	9.43	0.52	28.0	0.70	19.6	-0.13	0.07	0.25	1.00	1.00	-0.25	0.25	-0.38	0.32	31.79	-128.08	794.7	219.9	169.6
4.11	9.43	0.50	28.0	0.70	19.6	-0.13	0.07	0.25	1.00	1.00	-0.25	0.25	-0.38	0.32	31.89	-128.43	794.4	220.3	169.6
4.01	9.43	0.49	28.0	0.70	19.6	-0.12	0.07	0.25	1.00	1.00	-0.25	0.25	-0.37	0.32	32.00	-128.78	794.0	220.7	169.5
3.91	9.43	0.48	28.0	0.70	19.6	-0.12	0.07	0.25	1.00	1.00	-0.25	0.25	-0.37	0.32	32.11	-129.13	793.7	221.1	169.5
3.81	9.43	0.46	28.0	0.70	19.6	-0.12	0.07	0.25	1.00	1.00	-0.25	0.25	-0.37	0.32	32.21	-129.48	793.3	221.5	169.5
3.71	9.43	0.45	28.0	0.70	19.6	-0.11	0.06	0.25	1.00	1.00	-0.25	0.25	-0.36	0.31	32.32	-129.82	793.0	221.9	169.4
3.61	9.43	0.44	28.0	0.70	19.6	-0.11	0.06	0.25	1.00	1.00	-0.25	0.25	-0.36	0.31	32.43	-130.16	792.6	222.3	169.4
3.51	9.43	0.43	28.0	0.70	19.6	-0.11	0.06	0.25	1.00	1.00	-0.25	0.25	-0.36	0.31	32.53	-130.50	792.3	222.7	169.4
3.41	9.43	0.41	0.0	0.70	0.0	0.00	0.00	0.50	1.00	1.00	0.00	0.00	0.00	0.00	32.64	-130.50	792.3	222.8	169.4
3.31	9.43	0.40	0.0	0.70	0.0	0.00	0.00	0.50	1.00	1.00	0.00	0.00	0.00	0.00	32.74	-130.50	792.3	222.9	169.4
3.21	9.43	0.39	0.0	0.70	0.0	0.00	0.00	0.50	1.00	1.00	0.00	0.00	0.00	0.00	32.85	-130.50	792.3	223.0	169.4
3.11	9.43	0.38	0.0	0.70	0.0	0.00	0.00	0.50	1.00	1.00	0.00	0.00	0.00	0.00	32.96	-130.50	792.3	223.1	169.4
3.01	9.43	0.37	0.0	0.70	0.0	0.00	0.00	0.50	1.00	1.00	0.00	0.00	0.00	0.00	33.06	-130.50	792.3	223.2	169.4
2.91	9.43	0.35	0.0	0.70	0.0	0.00	0.00	0.50	1.00	1.00	0.00	0.00	0.00	0.00	33.17	-130.50	792.3	223.3	169.4
2.81	9.43	0.34	0.0	0.70	0.0	0.00	0.00	0.50	1.00	1.00	0.00	0.00	0.00	0.00	33.28	-130.50	792.3	223.4	169.4
2.71	9.43	0.33	0.0	0.70	0.0	0.00	0.00	0.50	1.00	1.00	0.00	0.00	0.00	0.00	33.38	-130.50	792.3	223.5	169.4
2.61	9.43	0.32	0.0	0.70	0.0	0.00	0.00	0.50	1.00	1.00	0.00	0.00	0.00	0.00	33.49	-130.50	792.3	223.6	169.4
2.51	9.43	0.31	0.0	0.70	0.0	0.00	0.00	0.50	1.00	1.00	0.00	0.00	0.00	0.00	33.59	-130.50	792.3	223.8	169.4
2.40	9.43	0.29	0.0	0.70	0.0	0.00	0.00	0.50	1.00	1.00	0.00	0.00	0.00	0.00	33.70	-130.50	792.3	223.9	169.4
2.30	9.43	0.28	0.0	0.70	0.0	0.00	0.00	0.50	1.00	1.00	0.00	0.00	0.00	0.00	33.81	-130.50	792.3	224.0	169.4
2.20	9.43	0.27	0.0	0.70	0.0	0.00	0.00	0.50	1.00	1.00	0.00	0.00	0.00	0.00	33.91	-130.50	792.3	224.1	169.4
2.10	9.43	0.26	0.0	0.70	0.0	0.00	0.00	0.50	1.00	1.00	0.00	0.00	0.00	0.00	34.02	-130.50	792.3	224.2	169.4
2.00	9.43	0.25	0.0	0.70	0.0	0.00	0.00	0.50	1.00	1.00	0.00	0.00	0.00	0.00	34.12	-130.50	792.3	224.3	169.4
1.90	9.43	0.23	0.0	0.70	0.0	0.00	0.00	0.50	1.00	1.00	0.00	0.00	0.00	0.00	34.23	-130.50	792.3	224.4	169.4
1.80	9.43	0.22	0.0	0.70	0.0	0.00	0.00	0.50	1.00	1.00	0.00	0.00	0.00	0.00	34.34	-130.50	792.3	224.5	169.4
1.70	9.43	0.21	0.0	0.70	0.0	0.00	0.00	0.50	1.00	1.00	0.00	0.00	0.00	0.00	34.44	-130.50	792.3	224.6	169.4
1.60	9.43	0.20	0.0	0.70	0.0	0.00	0.00	0.50	1.00	1.00	0.00	0.00	0.00	0.00	34.55	-130.50	792.3	224.7	169.4
1.50	9.43	0.19	0.0	0.70	0.0	0.00	0.00	0.50	1.00	1.00	0.00	0.00	0.00	0.00	34.66	-130.50	792.3	224.8	169.4
1.40	9.43	0.17	0.0	0.70	0.0	0.00	0.00	0.50	1.00	1.00	0.00	0.00	0.00	0.00	34.76	-130.50	792.3	224.9	169.4
1.30	9.43	0.16	0.0	0.70	0.0	0.00	0.00	0.50	1.00	1.00	0.00	0.00	0.00	0.00	34.87	-130.50	792.3	225.0	169.4
1.20	9.43	0.15	0.0	0.70	0.0	0.00	0.00	0.50	1.00	1.00	0.00	0.00	0.00	0.00	34.97	-130.50	792.3	225.1	169.4
1.10	9.43	0.14	0.0	0.70	0.0	0.00	0.00	0.50	1.00	1.00	0.00	0.00	0.00	0.00	35.08	-130.50	792.3	225.2	169.4
1.00	9.43	0.13	0.0	0.70	0.0	0.00	0.00	0.50	1.00	1.00	0.00	0.00	0.00	0.00	35.19	-130.50	792.3	225.3	169.4
0.90	9.43	0.11	0.0	0.70	0.0	0.00	0.00	0.50	1.00	1.00	0.00	0.00	0.00	0.00	35.29	-130.50	792.3	225.5	169.4
0.80	9.43	0.10	0.0	0.70	0.0	0.00	0.00	0.50	1.00	1.00	0.00	0.00	0.00	0.00	35.40	-130.50	792.3	225.6	169.4
0.70	9.43	0.09	0.0	0.70	0.0	0.00	0.00	0.50	1.00	1.00	0.00	0.00	0.00	0.00	35.51	-130.50	792.3	225.7	169.4
0.60	9.43	0.08	0.0	0.70	0.0	0.00	0.00	0.50	1.00	1.00	0.00	0.00	0.00	0.00	35.61	-130.50	792.3	225.8	169.4
0.50	9.43	0.07	0.0	0.70	0.0	0.00	0.00	0.50	1.00	1.00	0.00	0.00	0.00	0.00	35.72	-130.50	792.3	225.9	169.4
0.40	9.43	0.05	0.0	0.70	0.0	0.00	0.00	0.50	1.00	1.00	0.00	0.00	0.00	0.00	35.82	-130.50	792.3	226.0	169.4
0.30	9.43	0.04	0.0	0.70	0.0	0.00	0.00	0.50	1.00	1.00	0.00	0.00	0.00	0.00	35.93	-130.50	792.3	226.1	169.4
0.20	9.43	0.03	0.0	0.70	0.0	0.00	0.00	0.50	1.00	1.00	0.00	0.00	0.00	0.00	36.04	-130.50	792.3	226.2	169.4
0.10	9.43	0.02	0.0	0.70	0.0	0.00	0.00	0.50	1.00	1.00	0.00	0.00	0.00	0.00	36.14	-130.50	792.3	226.3	169.4
0.00	9.43	0.01	0.0	0.70	0.0	0.00	0.00	0.50	1.00	1.00	0.00	0.00	0.00	0.00	36.25	-130.50	792.3	226.4	169.4

SETTLEMENT based on Ultimate Loading by Vesic Method (1977):
Ztip=50.00 Btip= 3.00 Cp= 0.135 Cs= 0.214
Xpp=3.817-in Xps= 0.017-in Xtip= 3.834-in
Cp & Cs are average value at bearing stratum from pile tip extend to 4 Btip

At loading: Qtip=756.6-kp Qtop= 792.3-kp Qside= 35.7-kp
Xtip=3.834-in Xtop= 4.000-in Xshaft= 0.166-in

LOAD - TOTAL SETTLEMENT RELATION (from t-z, and q-w curves):
Based on Vesic Method (1977)

Xtop -in	Xshaft -in	Xtip -in	Qtip -kp	Qside -kp	Qtotal -kp
0.0003	0.0003	0.0000	1.0	0.6	1.6
0.0245	0.0033	0.0213	11.9	9.4	21.3
0.0487	0.0061	0.0426	22.8	16.5	39.3
0.0726	0.0088	0.0638	33.7	22.1	55.8
0.0965	0.0114	0.0851	44.6	26.4	71.0
0.1202	0.0138	0.1064	55.6	29.6	85.2
0.1439	0.0162	0.1277	66.5	32.0	98.4
0.1674	0.0185	0.1489	77.3	33.6	110.9
0.1909	0.0207	0.1702	88.2	34.7	122.8
0.2144	0.0229	0.1915	98.9	35.3	134.3
0.2378	0.0251	0.2128	109.7	35.6	145.3
0.2612	0.0272	0.2340	120.4	35.7	156.0
0.2846	0.0292	0.2553	131.0	35.5	166.6
0.3079	0.0313	0.2766	141.6	35.3	176.9
0.3312	0.0333	0.2979	152.1	35.0	187.1
0.3545	0.0353	0.3191	162.5	34.7	197.2
0.3778	0.0373	0.3404	172.8	34.4	207.2
0.4010	0.0393	0.3617	183.0	34.1	217.2
0.4243	0.0413	0.3830	193.2	33.9	227.1
0.4475	0.0432	0.4043	203.2	33.7	236.9
0.4707	0.0452	0.4255	213.2	33.5	246.7
0.4939	0.0471	0.4468	223.0	33.3	256.4
0.5171	0.0490	0.4681	232.8	33.2	265.9
0.5402	0.0509	0.4894	242.4	33.1	275.4
0.5634	0.0527	0.5106	251.9	32.9	284.8
0.5865	0.0546	0.5319	261.3	32.8	294.0
0.6095	0.0564	0.5532	270.6	32.5	303.1
0.6326	0.0581	0.5745	279.7	32.3	312.0
0.6556	0.0599	0.5957	288.7	32.0	320.7
0.6786	0.0616	0.6170	297.7	31.6	329.3
0.7016	0.0633	0.6383	306.4	31.2	337.6
0.7245	0.0649	0.6596	315.1	30.7	345.8
0.7474	0.0665	0.6808	323.6	30.2	353.8
0.7703	0.0681	0.7021	332.0	29.6	361.6
0.7931	0.0697	0.7234	340.3	29.0	369.3
0.8159	0.0713	0.7447	348.5	28.5	377.0
0.8387	0.0728	0.7659	356.5	28.0	384.5
0.8615	0.0743	0.7872	364.4	27.7	392.1
0.8844	0.0759	0.8085	372.1	28.0	400.1
0.9071	0.0774	0.8298	379.8	28.0	407.8
0.9299	0.0788	0.8511	387.3	28.0	415.3
0.9526	0.0803	0.8723	394.6	28.0	422.6
0.9753	0.0817	0.8936	401.9	28.0	429.9
0.9980	0.0831	0.9149	409.0	28.1	437.1
1.0207	0.0845	0.9362	416.0	28.1	444.1
1.0433	0.0859	0.9574	422.9	28.2	451.1
1.0659	0.0872	0.9787	429.6	28.3	457.9
1.0885	0.0885	1.0000	436.3	28.4	464.7
1.1111	0.0898	1.0213	442.8	28.5	471.3
1.1336	0.0911	1.0425	449.1	28.7	477.8
1.1561	0.0923	1.0638	455.4	28.8	484.2
1.1786	0.0935	1.0851	461.6	28.9	490.5
1.2011	0.0947	1.1064	467.6	29.1	496.7
1.2236	0.0959	1.1276	473.5	29.3	502.8
1.2460	0.0971	1.1489	479.4	29.4	508.8
1.2684	0.0982	1.1702	485.1	29.6	514.6
1.2908	0.0993	1.1915	490.7	29.7	520.4
1.3132	0.1004	1.2128	496.1	29.9	526.0
1.3355	0.1015	1.2340	501.5	30.0	531.5
1.3578	0.1025	1.2553	506.8	30.1	536.9

1.3802	0.1036	1.2766	512.0	30.2	542.2
1.4024	0.1046	1.2979	517.1	30.3	547.4
1.4247	0.1056	1.3191	522.1	30.4	552.5
1.4469	0.1065	1.3404	527.0	30.4	557.4
1.4692	0.1075	1.3617	531.8	30.5	562.3
1.4914	0.1084	1.3830	536.5	30.5	567.0
1.5136	0.1093	1.4042	541.2	30.5	571.7
1.5357	0.1102	1.4255	545.7	30.5	576.2
1.5579	0.1111	1.4468	550.2	30.5	580.7
1.5800	0.1120	1.4681	554.6	30.5	585.1
1.6022	0.1128	1.4893	558.9	30.6	589.4
1.6243	0.1137	1.5106	563.1	30.6	593.7
1.6464	0.1145	1.5319	567.3	30.8	598.0
1.6685	0.1153	1.5532	571.4	31.0	602.3
1.6906	0.1161	1.5745	575.4	31.2	606.6
1.7127	0.1169	1.5957	579.3	31.7	611.0
1.7347	0.1177	1.6170	583.2	31.2	614.4
1.7567	0.1184	1.6383	587.0	31.2	618.2
1.7787	0.1191	1.6596	590.8	31.1	621.9
1.8007	0.1199	1.6808	594.5	31.1	625.6
1.8227	0.1206	1.7021	598.1	31.1	629.2
1.8447	0.1213	1.7234	601.7	31.1	632.8
1.8666	0.1220	1.7447	605.2	31.0	636.3
1.8886	0.1226	1.7659	608.7	31.0	639.7
1.9105	0.1233	1.7872	612.1	31.0	643.1
1.9325	0.1240	1.8085	615.5	30.9	646.5
1.9544	0.1246	1.8298	618.9	30.9	649.8
1.9763	0.1253	1.8510	622.1	30.9	653.0
1.9982	0.1259	1.8723	625.4	30.9	656.2
2.0201	0.1265	1.8936	628.6	30.8	659.4
2.0420	0.1271	1.9149	631.7	30.8	662.5
2.0639	0.1278	1.9361	634.8	30.8	665.6
2.0858	0.1284	1.9574	637.9	30.8	668.7
2.1077	0.1290	1.9787	640.9	30.7	671.7
2.1295	0.1295	2.0000	643.9	30.7	674.6
2.5394	0.1394	2.4000	694.4	30.2	724.6
2.9471	0.1471	2.8000	733.8	29.7	763.5
3.3515	0.1515	3.2000	756.6	29.2	785.8
3.7508	0.1509	3.6000	753.5	28.7	782.1
4.1441	0.1441	4.0000	719.5	28.1	747.7

At Qwork= 224.00-kp Settlement= 0.41706-in
At Qwork= 224.00-kp Secant Stiffness Kqx= 537.10-kp/-in
At Xallow= 1.00-in Q= 437.70-kp
Note: If the program cannot find a result or the result exceeds the upper limit. The result will be displayed as 99999.

SUMMARY:

Total Ultimate Capacity (Down)= 792.288-kp Total Ultimate Capacity (Up)= 226.408-kp
Total Allowable Capacity (Down)= 270.039-kp Total Allowable Capacity (Up)= 131.329-kp

Weight above Ground= 0.00 Total Pile Weight= 36.25-kp *Soil Weight is not included
Side Resistance (Down)= 35.660-kp Side Resistance (Up)= 190.159-kp
Tip Resistance (Down)= 756.629-kp Tip Resistance (Up)= 0.000-kp
Negative Friction, Qneg= -130.496-kp, which has been subtracted from Total Ultimate Capacity (Down)
Negative friction does not affect Total Uplift Ultimate Capacity (Up)

OK! Qallow > Q * Vertical Load, Q= 224.0 -kp

FACTOR OF SAFETY:

FSside	FStip	FSup	FSweight
2.0	3.0	2.0	1.0

* FStorsion = FSside

Notes:
* Settlement in the program is Elastic Settlement only. Consolidation Settlement is not calculated!
Length - Pile length, distance from pile top to tip (not from ground surface)
Width or D - Width of pile shaft (pile diameter)
Ds and Dl - Short Side and Long Side of Footing
Area - Section area of pile shaft or tip area of pile
Sv - Vertical stress in soils (It may be limited based on critical depth, Z_lim or Z/D
qult - Ultimate tip resistance (pressure)
Qtip_dw - Ultimate downward tip resistance (Force or Capacity)
Qtip_up - Ultimate uplift tip resistance for belled pile or uplift plate (Force or Capacity)
Torsion - Ultimate torsion resistance for single pile (Capacity)
dz - Small Segment of Depth for Calculation
Zs - Soil Depth, Depth from ground surface
Zp - Pile Depth, Depth from pile top
Prem - Primer of pile shaft
Phi - Soil internal friction angle (between soils)
Kf - Friction factor to convert Phi to Delta
Delta - Ski friction between soil and pile (function of Phi. It is different from Phi)
f_dw - Downward Resistance between soil and pile from Delta
f_up - Uplift Resistance between soil and pile from Delta
C - Soil cohesion (between soils)
Ca - Adhesion between soil and pile (function of C. It is different from C) Ca=KaKcC
Ka - Adhesion ratio, C/Ca
Kc - Adhesion factor defended by users
Ca_dw - Downward adhesion between pile and soil
Ca_up - Uplift adhesion between pile and soil
Sf_dw - Downward side resistance (sum of friction and adhesion, f_dw + Ca_dw)
Sf_up - Uplift side resistance (sum of friction and adhesion, f_up + Ca_up)
Torsion side resistance = (Sf_dw+Sf_up)/2 * pile diameter/2
Weight - Weight of Pile shaft
Qneg - negative friction Resistance
Qside - Ultimate side resistance (Qside_dw or Qside_up)
Qtip - Ultimate tip resistance (Qtip_dw or Qtip_up for uplift plate)
Q_dw - Ultimate downward capacity (Qtip + Qside_dw)
Q_up - Ultimate uplift capacity (Weight + Qside_up)
E - Elastic modules
Xs - Settlement due to axial deformation of pile shaft
Xpp - Settlement due to point load from pile tip
Xps- Settlement due to load from pile shaft
Xtop - Total settlement, Xs + Xpp + Xps
Xtip - Tip settlement, Xpp + Xps
Xshaft - Shaft deformation, Xs
Xallow - Allowable settlement specified by users
Qwork - Vertical working load applied to pile
Qallow - Vertical allowable load, Qult/F.S.

VERTICAL ANALYSIS

Figure 1

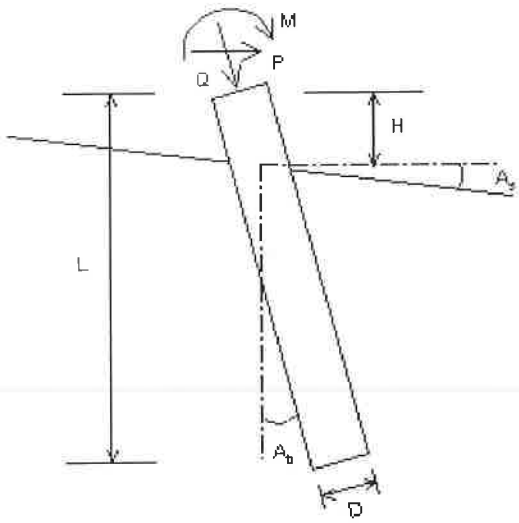

Drilled Shaft (dia >24 in. or 61 cm)

Loads:
Load Factor for Vertical Loads= 1.0
Load Factor for Lateral Loads= 1.0
Loads Supported by Pile Cap= 0 %
Shear Condition: Static

(with Load Factor)
Vertical Load, Q= 266.0 -kp

Profile:
Pile Length, L= 50.0 -ft
Top Height, H= 0 -ft
Slope Angle, As= 0
Batter Angle, Ab= 0

* Zero Friction *
Zero Friction Start: 0 -ft End: 3.5 -ft
* Negative Friction *
Negative Friction Start: 3.5 -ft End: 32 -ft with Factor: 1

Soil Data:

Depth -ft	Gamma -lb/f3	Phi	C -kp/f2	K -lb/i3	e50 or Dr %	Nspt
0	120.0	0.0	0.500	276.5	0.92	9
3.5	126.9	28	0.250	231.7	0.98	8
8.5	108.0	0.0	0.350	44.2	1.74	3
12	48.4	0.0	0.350	41.5	1.81	3
19.5	46.7	30	0.00	17.4	23.30	6
24.5	57.9	34	0.00	57.7	49.28	17
35	61.2	36	0.00	105.5	69.49	34

Pile Data:

Depth -ft	Width -in	Area -in2	Per. -in	I -in4	E -kp/i2	Weight -kp/f
0.0	42	1385.4	131.9	152745.0	3000	1.443
50.0						

Vertical Capacity:
Weight above Ground= 0.00 Total Weight= 49.35-kp *Soil Weight is not included
Side Resistance (Down)= 41.589-kp Side Resistance (Up)= 221.768-kp
Tip Resistance (Down)= 1029.800-kp Tip Resistance (Up)= 0.000-kp
Total Ultimate Capacity (Down) Qult= 1071.389-kp Total Ultimate Capacity (Up)= 271.120-kp
Total Allowable Capacity (Down) Qallow= 364.061-kp Total Allowable Capacity (Up) Qallow= 160.236-kp
OK! Qallow > Q

Settlement Calculation:
At Q= 266.00-kp Settlement= 0.41323-in
At Xallow= 1.00-in Q= 533.96332-kp

Note: If the program cannot find a result or the result exceeds the upper limit. The result will be displayed as 99999.

ALLOWABLE CAPACITY vs FOUNDATION DEPTH

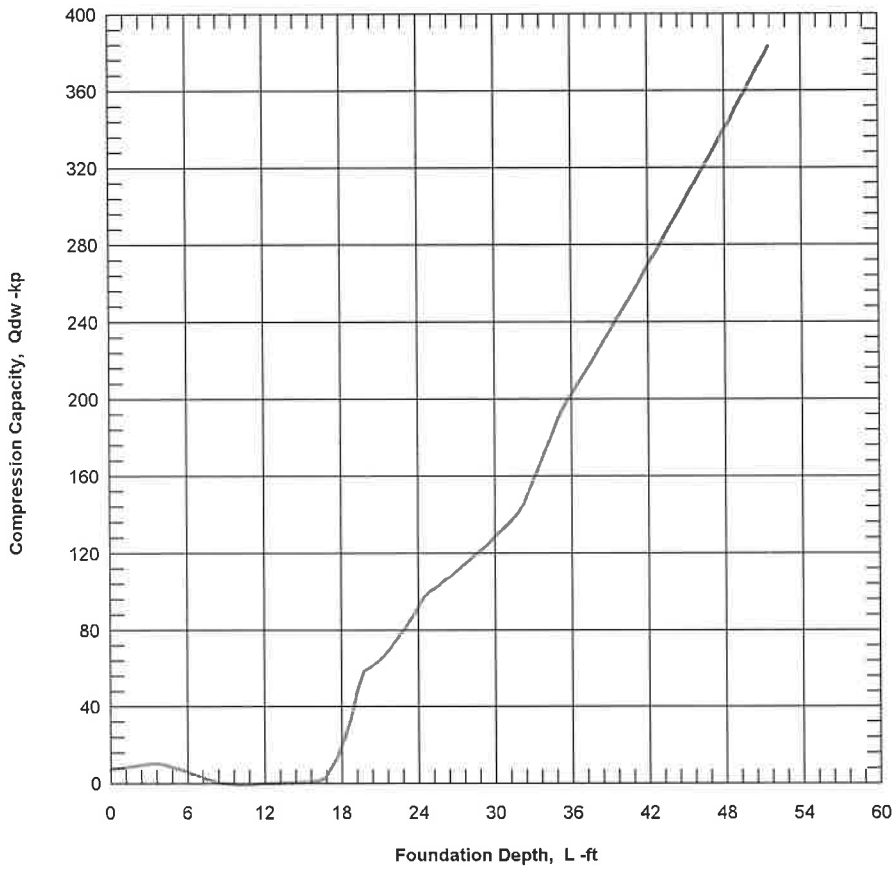

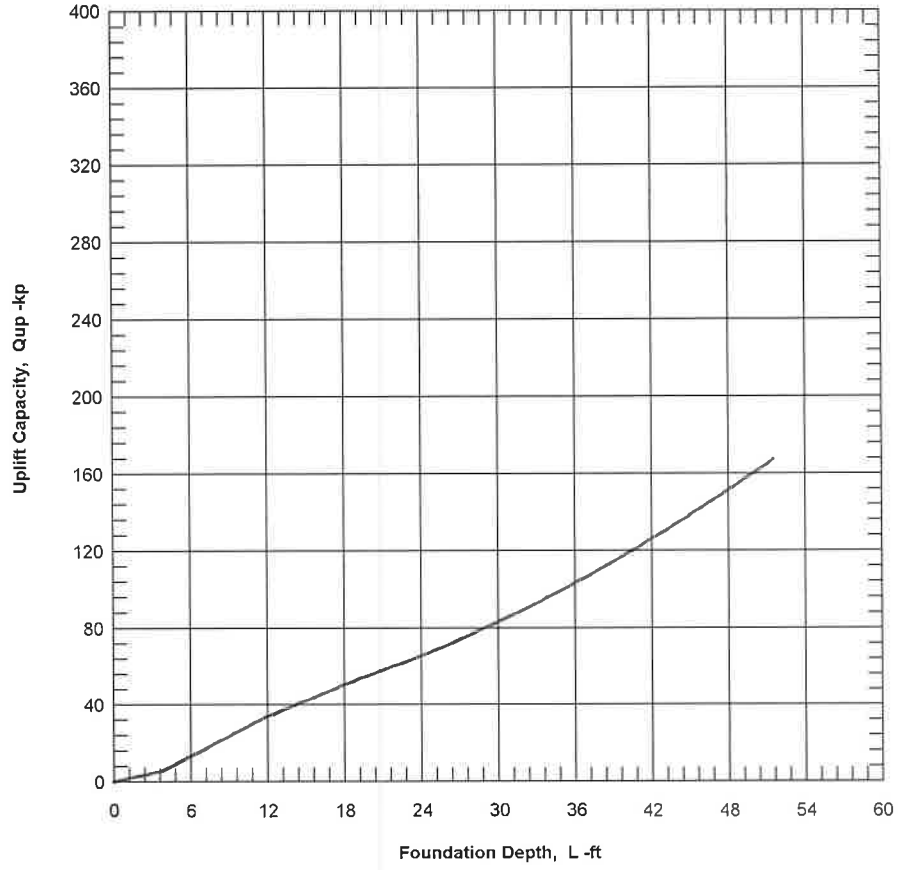

CivilTech Software

16G136 - 42-in-dia Drilled Pier
50-ft-deep; Using B-1 data

Figure 1

```
*****************************************************************
                    ALLPILE 7
       VERTICAL ANALYSIS DETAILED OUTPUT
        Copyright by CivilTech Software
                www.civiltech.com
*****************************************************************
Licensed to
Date: 7/8/2019  File: P:\Geotechnical\2016 Geotechnical\16G136 Alston 2 CI Bldgs Long Beach\Deep Foundation Design\Apr 28 2016\Boring B-1\42india50ftdeep_01.alp                    1.0

Title 1: 16G136 - 42-in-dia Drilled Pier
Title 2: 50-ft-deep; Using B-1 data

ALLPILE INPUT DATA:
**_____________________________________________________**

* Pile Type Page *
Unit: English
Diameter more than 24in (61cm). For bell section, select "Belled" in Diameter Variation of Pile Section Screen. Recommendation: 2 to 4 in Item 3 of Page F.
Pile Type: Drilled Shaft (dia >24 in. or 61 cm)

* Pile Profile *
Foundation Depth: 50.0 -ft
Top Height: 0 -ft
Slope Angle: 0
Pile Angle: 0

* Pile Properties *
Zs      Width   Area    Perim.    I        E       Weight  Mix     Out     In      Other.  Type
-ft     -in     -in2    -in       -in4     -kp/i2  -kp/f   %       Side    Side    Par.
_____________________________________________________________________________________________
0.0     42      1385.4  131.9     152745.0         3000    1.443   0.0     4       4       0       Concrete (smooth)
50.0                                                                                             Pile Tip
Note:  Mix = % of Inside material/Outside material

Group Type: 0
Top Type: 1

Water Table: 12 -ft
Ground Elevation: 0 -ft

* Soil Properties *
Zs      Gamma   Phi     C       K       E50/Dr  Nspt    Type    Soil
-ft     -lb/f3  o       -kp/f2  -lb/i3   - %
0.0     120.0   0.0     0.500   276.5   0.92    9       1       Fill
3.5     126.9   28      0.250   231.7   0.98    8       3       Alluvium
8.5     108.0   0.0     0.350   44.2    1.74    3       1       Alluvium
12.0    48.4    0.0     0.350   41.5    1.81    3       1       Alluvium
19.5    46.7    30      0.00    17.4    23.30   6       4       Alluvium
24.5    57.9    34      0.00    57.7    49.28   17      4       Alluvium
35.0    61.2    36      0.00    105.5   69.49   34      4       Alluvium

Surcharge Pressure on ground: 0 -kp/f2

* Zero Friction *
Zero Friction Start: 0 -ft      End: 3.5 -ft

* Negative Friction *
Negative Friction Start: 3.5 -ft        End: 32 -ft     with Factor: 1

ALLPILE ANALYSIS AND RESULTS:
**_____________________________________________________**

Pile Profile and Loading:
        Piletype: Drilled Shaft (dia >24 in. or 61 cm)
        Pile Length, L= 50.0 -ft
        Top Height, H= 0 -ft
        Slope Angle, As= 0
        Batter Angle, Ab= 0.00

        *To consider the influence of different soils below the pile tip, bearing stratum is defined
        from pile tip extending to 4 Diameter of pile, which is 14.0-ft (Input Page F, Item 3)

Single Pile, Vertical Analysis:
        Vertical Load with Load factor, Q= 266.0 -kp
        Vertical Load with Load factor and Pile Cap, Q= 266.0 -kp
          Load Factor for Vertical Loads= 1.0
          Vertical Loads Supported by Pile Cap: 0 %
          Kdown= 0.7      Kup= 0.4        Ka= 1.00


From Ztip=50.0 to 64.0-ft  Average Properties: Es= 543.94-kp/f2  C=0.00-kp/f2  Friction=36.00 Cp=0.14  Ksand=1.00
Limits of Max. tip resistance, q_lim= N/A
Batter Angle, Ab= 0.00    Batter Factor, Kbat= 1.00
Qtip_dw=1029.8-kp  based on qult=107.0-kp/f2  and Base Area=9.6-ft2
Qtip_up=0.0-kp  and Base Area=0.0-ft2


TIP RESISTANCE (Down) CALCULATION:
Tip Depth= 50.0-ft Critical Depth Ratio Z/D= 20 Critical Depth= 70.0-ft
Equivalent Width of Tip= 3.50-ft,   Tip Area= 9.62-ft2   Tip Diameter= 3.50-ft
Bearing stratum from pile tip extending to 4 Diameter of pile. Bearing stratum= 14.00-ft
Btip: width at pile tip= 3.50-ft (For group pile, it is equivalent width).
Phi & C are average value in bearing stratum.
Batter Angle= 0.00,    Batter Factor for Tip and Side= 1.00

Ztip    Z/D     Z_lim   q_lim   Width   Area'   Phi     C       Nq      Nc      Sv      qult    Qtip_dw
-ft             -ft     -kp/f2  -ft     -ft2    - o     -kp/f2                  -kp/f2  -kp/f2  -kp
_____________________________________________________________________________________________
50.0    20.0    70.0    N/A     3.50    9.62    36.0    0.00    30.1    9.0     3.6     107.0   1029.8

 Ztip - Depth of pile tip from ground surface (Zs)
 D - Pile average diameter (below ground) for calculation of critical depth.  D=3.50-ft
 Z/D - Critical depth (for tip resistances) as ratio of depth/diameter. Vertical stress will be constant below critical depth
 Z_lim - Critical depth, calculated from Z/D (for tip resistances)
 q_lim -  Limit of Maximum tip resistance
 Btip: width or diameter at pile tip
 Bearing stratum: A stratum from  pile tip extending to some depth. Average soil properties in the stratum are used for bearing calculation


SIDE RESISTANCE (Uplift & Down) CALCULATION:
D       Z/D     Z_lim   Sf_lim  K_dw    K_up    dz
-ft             -ft     -kp/f2                  -ft
_____________________________________________
3.50    20.0    70.00   N/A     0.7     0.4     0.100

 D - Pile average diameter for calculation of critical depth
 Z/D - Critical depth (for side resistances) as ratio of depth/diameter.  Vertical stress will be constant below critical depth
```

Z_lim - Critical depth calculated from Z/D (for side resistances)
Sf_lim - Limit of Maximum side resistance

Users Setting: Ka=1, which is constant. Ca=KcKaC=KcC

SIDE RESISTANCE (Up & Down) CALCULATION vs DEPTH:
Calculation is based on segment dZ= 0.10

Zs -ft	Prem -ft	Sv -kp/f2	Phi - o	Kf(<2) Delta	Delta - o	f_dw -kp/f2	f_up -kp/f2	C -kp/f2	Ka	Kc(<2) Ca	Ca_dw -kp/f2	Ca_up -kp/f2	Sf_dw -kp/f2	Sf_up -kp/f2	Weight -kp	Qneg -kp	Q_dw -kp	Q_up -kp	Torsion -kp-f
50.00	10.99	3.56	36.0	0.70	25.2	1.17	0.67	0.00	1.00	1.00	0.00	0.00	0.00	0.00	0.00	0.00	1029.8	0.0	0.0
49.90	10.99	3.56	36.0	0.70	25.2	1.17	0.67	0.00	1.00	1.00	0.00	0.00	1.17	0.67	0.08	0.00	1031.1	0.8	1.8
49.80	10.99	3.55	36.0	0.70	25.2	1.17	0.67	0.00	1.00	1.00	0.00	0.00	1.17	0.67	0.17	0.00	1032.4	1.6	3.5
49.70	10.99	3.54	36.0	0.70	25.2	1.17	0.67	0.00	1.00	1.00	0.00	0.00	1.17	0.67	0.25	0.00	1033.7	2.5	5.3
49.60	10.99	3.54	36.0	0.70	25.2	1.17	0.67	0.00	1.00	1.00	0.00	0.00	1.17	0.67	0.34	0.00	1034.9	3.3	7.1
49.50	10.99	3.53	36.0	0.70	25.2	1.16	0.66	0.00	1.00	1.00	0.00	0.00	1.16	0.66	0.42	0.00	1036.2	4.1	8.8
49.40	10.99	3.53	36.0	0.70	25.2	1.16	0.66	0.00	1.00	1.00	0.00	0.00	1.16	0.66	0.51	0.00	1037.5	4.9	10.6
49.30	10.99	3.52	36.0	0.70	25.2	1.16	0.66	0.00	1.00	1.00	0.00	0.00	1.16	0.66	0.59	0.00	1038.8	5.7	12.3
49.20	10.99	3.51	36.0	0.70	25.2	1.16	0.66	0.00	1.00	1.00	0.00	0.00	1.16	0.66	0.68	0.00	1040.1	6.5	14.1
49.10	10.99	3.51	36.0	0.70	25.2	1.16	0.66	0.00	1.00	1.00	0.00	0.00	1.16	0.66	0.76	0.00	1041.3	7.3	15.8
49.00	10.99	3.50	36.0	0.70	25.2	1.15	0.66	0.00	1.00	1.00	0.00	0.00	1.15	0.66	0.84	0.00	1042.6	8.2	17.6
48.90	10.99	3.49	36.0	0.70	25.2	1.15	0.66	0.00	1.00	1.00	0.00	0.00	1.15	0.66	0.93	0.00	1043.9	9.0	19.3
48.80	10.99	3.49	36.0	0.70	25.2	1.15	0.66	0.00	1.00	1.00	0.00	0.00	1.15	0.66	1.01	0.00	1045.1	9.8	21.1
48.70	10.99	3.48	36.0	0.70	25.2	1.15	0.66	0.00	1.00	1.00	0.00	0.00	1.15	0.66	1.10	0.00	1046.4	10.6	22.8
48.60	10.99	3.48	36.0	0.70	25.2	1.15	0.65	0.00	1.00	1.00	0.00	0.00	1.15	0.65	1.18	0.00	1047.7	11.4	24.5
48.50	10.99	3.47	36.0	0.70	25.2	1.14	0.65	0.00	1.00	1.00	0.00	0.00	1.14	0.65	1.27	0.00	1048.9	12.2	26.3
48.40	10.99	3.46	36.0	0.70	25.2	1.14	0.65	0.00	1.00	1.00	0.00	0.00	1.14	0.65	1.35	0.00	1050.2	13.0	28.0
48.30	10.99	3.46	36.0	0.70	25.2	1.14	0.65	0.00	1.00	1.00	0.00	0.00	1.14	0.65	1.44	0.00	1051.4	13.8	29.7
48.20	10.99	3.45	36.0	0.70	25.2	1.14	0.65	0.00	1.00	1.00	0.00	0.00	1.14	0.65	1.52	0.00	1052.7	14.6	31.4
48.10	10.99	3.45	36.0	0.70	25.2	1.13	0.65	0.00	1.00	1.00	0.00	0.00	1.13	0.65	1.60	0.00	1053.9	15.4	33.2
48.00	10.99	3.44	36.0	0.70	25.2	1.13	0.65	0.00	1.00	1.00	0.00	0.00	1.13	0.65	1.69	0.00	1055.2	16.2	34.9
47.90	10.99	3.43	36.0	0.70	25.2	1.13	0.65	0.00	1.00	1.00	0.00	0.00	1.13	0.65	1.77	0.00	1056.4	17.0	36.6
47.80	10.99	3.43	36.0	0.70	25.2	1.13	0.65	0.00	1.00	1.00	0.00	0.00	1.13	0.65	1.86	0.00	1057.7	17.8	38.3
47.70	10.99	3.42	36.0	0.70	25.2	1.13	0.64	0.00	1.00	1.00	0.00	0.00	1.13	0.64	1.94	0.00	1058.9	18.6	40.0
47.60	10.99	3.41	36.0	0.70	25.2	1.12	0.64	0.00	1.00	1.00	0.00	0.00	1.12	0.64	2.03	0.00	1060.1	19.4	41.7
47.49	10.99	3.41	36.0	0.70	25.2	1.12	0.64	0.00	1.00	1.00	0.00	0.00	1.12	0.64	2.11	0.00	1061.4	20.2	43.4
47.39	10.99	3.40	36.0	0.70	25.2	1.12	0.64	0.00	1.00	1.00	0.00	0.00	1.12	0.64	2.20	0.00	1062.6	20.9	45.1
47.29	10.99	3.40	36.0	0.70	25.2	1.12	0.64	0.00	1.00	1.00	0.00	0.00	1.12	0.64	2.28	0.00	1063.8	21.7	46.8
47.19	10.99	3.39	36.0	0.70	25.2	1.12	0.64	0.00	1.00	1.00	0.00	0.00	1.12	0.64	2.36	0.00	1065.1	22.5	48.5
47.09	10.99	3.38	36.0	0.70	25.2	1.11	0.64	0.00	1.00	1.00	0.00	0.00	1.11	0.64	2.45	0.00	1066.3	23.3	50.2
46.99	10.99	3.38	36.0	0.70	25.2	1.11	0.64	0.00	1.00	1.00	0.00	0.00	1.11	0.64	2.53	0.00	1067.5	24.1	51.9
46.89	10.99	3.37	36.0	0.70	25.2	1.11	0.63	0.00	1.00	1.00	0.00	0.00	1.11	0.63	2.62	0.00	1068.8	24.9	53.5
46.79	10.99	3.37	36.0	0.70	25.2	1.11	0.63	0.00	1.00	1.00	0.00	0.00	1.11	0.63	2.70	0.00	1070.0	25.7	55.2
46.69	10.99	3.36	36.0	0.70	25.2	1.11	0.63	0.00	1.00	1.00	0.00	0.00	1.11	0.63	2.79	0.00	1071.2	26.4	56.9
46.59	10.99	3.35	36.0	0.70	25.2	1.10	0.63	0.00	1.00	1.00	0.00	0.00	1.10	0.63	2.87	0.00	1072.4	27.2	58.6
46.49	10.99	3.35	36.0	0.70	25.2	1.10	0.63	0.00	1.00	1.00	0.00	0.00	1.10	0.63	2.96	0.00	1073.6	28.0	60.2
46.39	10.99	3.34	36.0	0.70	25.2	1.10	0.63	0.00	1.00	1.00	0.00	0.00	1.10	0.63	3.04	0.00	1074.8	28.8	61.9
46.29	10.99	3.34	36.0	0.70	25.2	1.10	0.63	0.00	1.00	1.00	0.00	0.00	1.10	0.63	3.12	0.00	1076.0	29.6	63.6
46.19	10.99	3.33	36.0	0.70	25.2	1.10	0.63	0.00	1.00	1.00	0.00	0.00	1.10	0.63	3.21	0.00	1077.3	30.3	65.2
46.09	10.99	3.32	36.0	0.70	25.2	1.09	0.63	0.00	1.00	1.00	0.00	0.00	1.09	0.63	3.29	0.00	1078.5	31.1	66.9
45.99	10.99	3.32	36.0	0.70	25.2	1.09	0.62	0.00	1.00	1.00	0.00	0.00	1.09	0.62	3.38	0.00	1079.7	31.9	68.5
45.89	10.99	3.31	36.0	0.70	25.2	1.09	0.62	0.00	1.00	1.00	0.00	0.00	1.09	0.62	3.46	0.00	1080.9	32.6	70.2
45.79	10.99	3.30	36.0	0.70	25.2	1.09	0.62	0.00	1.00	1.00	0.00	0.00	1.09	0.62	3.55	0.00	1082.1	33.4	71.8
45.69	10.99	3.30	36.0	0.70	25.2	1.09	0.62	0.00	1.00	1.00	0.00	0.00	1.09	0.62	3.63	0.00	1083.3	34.2	73.5
45.59	10.99	3.29	36.0	0.70	25.2	1.08	0.62	0.00	1.00	1.00	0.00	0.00	1.08	0.62	3.72	0.00	1084.5	34.9	75.1
45.49	10.99	3.29	36.0	0.70	25.2	1.08	0.62	0.00	1.00	1.00	0.00	0.00	1.08	0.62	3.80	0.00	1085.6	35.7	76.8
45.39	10.99	3.28	36.0	0.70	25.2	1.08	0.62	0.00	1.00	1.00	0.00	0.00	1.08	0.62	3.88	0.00	1086.8	36.5	78.4
45.29	10.99	3.27	36.0	0.70	25.2	1.08	0.62	0.00	1.00	1.00	0.00	0.00	1.08	0.62	3.97	0.00	1088.0	37.2	80.0
45.19	10.99	3.27	36.0	0.70	25.2	1.08	0.62	0.00	1.00	1.00	0.00	0.00	1.08	0.62	4.05	0.00	1089.2	38.0	81.7
45.09	10.99	3.26	36.0	0.70	25.2	1.07	0.61	0.00	1.00	1.00	0.00	0.00	1.07	0.61	4.14	0.00	1090.4	38.8	83.3
44.99	10.99	3.26	36.0	0.70	25.2	1.07	0.61	0.00	1.00	1.00	0.00	0.00	1.07	0.61	4.22	0.00	1091.6	39.5	84.9
44.89	10.99	3.25	36.0	0.70	25.2	1.07	0.61	0.00	1.00	1.00	0.00	0.00	1.07	0.61	4.31	0.00	1092.8	40.3	86.5
44.79	10.99	3.24	36.0	0.70	25.2	1.07	0.61	0.00	1.00	1.00	0.00	0.00	1.07	0.61	4.39	0.00	1093.9	41.0	88.1
44.69	10.99	3.24	36.0	0.70	25.2	1.07	0.61	0.00	1.00	1.00	0.00	0.00	1.07	0.61	4.48	0.00	1095.1	41.8	89.8
44.59	10.99	3.23	36.0	0.70	25.2	1.06	0.61	0.00	1.00	1.00	0.00	0.00	1.06	0.61	4.56	0.00	1096.3	42.5	91.4
44.49	10.99	3.22	36.0	0.70	25.2	1.06	0.61	0.00	1.00	1.00	0.00	0.00	1.06	0.61	4.64	0.00	1097.4	43.3	93.0
44.39	10.99	3.22	36.0	0.70	25.2	1.06	0.61	0.00	1.00	1.00	0.00	0.00	1.06	0.61	4.73	0.00	1098.6	44.1	94.6
44.29	10.99	3.21	36.0	0.70	25.2	1.06	0.60	0.00	1.00	1.00	0.00	0.00	1.06	0.60	4.81	0.00	1099.8	44.8	96.2
44.19	10.99	3.21	36.0	0.70	25.2	1.06	0.60	0.00	1.00	1.00	0.00	0.00	1.06	0.60	4.90	0.00	1100.9	45.6	97.8
44.09	10.99	3.20	36.0	0.70	25.2	1.05	0.60	0.00	1.00	1.00	0.00	0.00	1.05	0.60	4.98	0.00	1102.1	46.3	99.4
43.99	10.99	3.19	36.0	0.70	25.2	1.05	0.60	0.00	1.00	1.00	0.00	0.00	1.05	0.60	5.07	0.00	1103.3	47.0	101.0
43.89	10.99	3.19	36.0	0.70	25.2	1.05	0.60	0.00	1.00	1.00	0.00	0.00	1.05	0.60	5.15	0.00	1104.4	47.8	102.6
43.79	10.99	3.18	36.0	0.70	25.2	1.05	0.60	0.00	1.00	1.00	0.00	0.00	1.05	0.60	5.23	0.00	1105.6	48.5	104.2
43.69	10.99	3.18	36.0	0.70	25.2	1.05	0.60	0.00	1.00	1.00	0.00	0.00	1.05	0.60	5.32	0.00	1106.7	49.3	105.7
43.59	10.99	3.17	36.0	0.70	25.2	1.04	0.60	0.00	1.00	1.00	0.00	0.00	1.04	0.60	5.40	0.00	1107.9	50.0	107.3
43.49	10.99	3.16	36.0	0.70	25.2	1.04	0.60	0.00	1.00	1.00	0.00	0.00	1.04	0.60	5.49	0.00	1109.0	50.8	108.9
43.39	10.99	3.16	36.0	0.70	25.2	1.04	0.59	0.00	1.00	1.00	0.00	0.00	1.04	0.59	5.57	0.00	1110.2	51.5	110.5
43.29	10.99	3.15	36.0	0.70	25.2	1.04	0.59	0.00	1.00	1.00	0.00	0.00	1.04	0.59	5.66	0.00	1111.3	52.2	112.0
43.19	10.99	3.14	36.0	0.70	25.2	1.04	0.59	0.00	1.00	1.00	0.00	0.00	1.04	0.59	5.74	0.00	1112.5	53.0	113.6
43.09	10.99	3.14	36.0	0.70	25.2	1.03	0.59	0.00	1.00	1.00	0.00	0.00	1.03	0.59	5.83	0.00	1113.6	53.7	115.2
42.99	10.99	3.13	36.0	0.70	25.2	1.03	0.59	0.00	1.00	1.00	0.00	0.00	1.03	0.59	5.91	0.00	1114.7	54.4	116.7
42.89	10.99	3.13	36.0	0.70	25.2	1.03	0.59	0.00	1.00	1.00	0.00	0.00	1.03	0.59	5.99	0.00	1115.9	55.2	118.3
42.79	10.99	3.12	36.0	0.70	25.2	1.03	0.59	0.00	1.00	1.00	0.00	0.00	1.03	0.59	6.08	0.00	1117.0	55.9	119.8
42.69	10.99	3.11	36.0	0.70	25.2	1.03	0.59	0.00	1.00	1.00	0.00	0.00	1.03	0.59	6.16	0.00	1118.1	56.6	121.4
42.59	10.99	3.11	36.0	0.70	25.2	1.02	0.59	0.00	1.00	1.00	0.00	0.00	1.02	0.59	6.25	0.00	1119.3	57.4	123.0
42.48	10.99	3.10	36.0	0.70	25.2	1.02	0.58	0.00	1.00	1.00	0.00	0.00	1.02	0.58	6.33	0.00	1120.4	58.1	124.5
42.38	10.99	3.10	36.0	0.70	25.2	1.02	0.58	0.00	1.00	1.00	0.00	0.00	1.02	0.58	6.42	0.00	1121.5	58.8	126.0
42.28	10.99	3.09	36.0	0.70	25.2	1.02	0.58	0.00	1.00	1.00	0.00	0.00	1.02	0.58	6.50	0.00	1122.6	59.5	127.6
42.18	10.99	3.08	36.0	0.70	25.2	1.02	0.58	0.00	1.00	1.00	0.00	0.00	1.02	0.58	6.59	0.00	1123.7	60.3	129.1
42.08	10.99	3.08	36.0	0.70	25.2	1.01	0.58	0.00	1.00	1.00	0.00	0.00	1.01	0.58	6.67	0.00	1124.9	61.0	130.7
41.98	10.99	3.07	36.0	0.70	25.2	1.01	0.58	0.00	1.00	1.00	0.00	0.00	1.01	0.58	6.75	0.00	1126.0	61.7	132.2
41.88	10.99	3.07	36.0	0.70	25.2	1.01	0.58	0.00	1.00	1.00	0.00	0.00	1.01	0.58	6.84	0.00	1127.1	62.4	133.7
41.78	10.99	3.06	36.0	0.70	25.2	1.01	0.58	0.00	1.00	1.00	0.00	0.00	1.01	0.58	6.92	0.00	1128.2	63.1	135.2
41.68	10.99	3.05	36.0	0.70	25.2	1.01	0.57	0.00	1.00	1.00	0.00	0.00	1.01	0.57	7.01	0.00	1129.3	63.9	136.8
41.58	10.99	3.05	36.0	0.70	25.2	1.00	0.57	0.00	1.00	1.00	0.00	0.00	1.00	0.57	7.09	0.00	1130.4	64.6	138.3
41.48	10.99	3.04	36.0	0.70	25.2	1.00	0.57	0.00	1.00	1.00	0.00	0.00	1.00	0.57	7.18	0.00	1131.5	65.3	139.8
41.38	10.99	3.03	36.0	0.70	25.2	1.00	0.57	0.00	1.00	1.00	0.00	0.00	1.00	0.57	7.26	0.00	1132.6	66.0	141.3
41.28	10.99	3.03	36.0	0.70	25.2	1.00	0.57	0.00	1.00	1.00	0.00	0.00	1.00	0.57	7.35	0.00	1133.7	66.7	142.8
41.18	10.99	3.02	36.0	0.70	25.2	1.00	0.57	0.00	1.00	1.00	0.00	0.00	1.00	0.57	7.43	0.00	1134.8	67.4	144.3
41.08	10.99	3.02	36.0	0.70	25.2	0.99	0.57	0.00	1.00	1.00	0.00	0.00	0.99	0.57	7.51	0.00	1135.9	68.1	145.8
40.98	10.99	3.01	36.0	0.70	25.2	0.99	0.57	0.00	1.00	1.00	0.00	0.00	0.99	0.57	7.60	0.00	1137.0	68.9	147.3
40.88	10.99	3.00	36.0	0.70	25.2	0.99	0.57	0.00	1.00	1.00	0.00	0.00	0.99	0.57	7.68	0.00	1138.1	69.6	148.8
40.78	10.99	3.00	36.0	0.70	25.2	0.99	0.56	0.00	1.00	1.00	0.00	0.00	0.99	0.56	7.77	0.00	1139.2	70.3	150.3
40.68	10.99	2.99	36.0	0.70	25.2	0.99	0.56	0.00	1.00	1.00	0.00	0.00	0.99	0.56	7.85	0.00	1140.3	71.0	151.8
40.58	10.99	2.99	36.0	0.70	25.2	0.98	0.56	0.00	1.00	1.00	0.00	0.00	0.98	0.56	7.94	0.00	1141.3	71.7	153.3
40.48	10.99	2.98	36.0	0.70	25.2	0.98	0.56	0.00	1.00	1.00	0.00	0.00	0.98	0.56	8.02	0.00	1142.4	72.4	154.8
40.38	10.99	2.97	36.0	0.70	25.2	0.98	0.56	0.00	1.00	1.00	0.00	0.00	0.98	0.56	8.11	0.00	1143.5	73.1	156.3
40.28	10.99	2.97	36.0	0.70	25.2	0.98	0.56	0.00	1.00	1.00	0.00	0.00	0.98	0.56	8.19	0.00	1144.6	73.8	157.8
40.18	10.99	2.96	36.0	0.70	25.2	0.98	0.56	0.00	1.00	1.00	0.00	0.00	0.98	0.56	8.27	0.00	1145.6	74.5	159.2
40.08	10.99	2.95	36.0	0.70	25.2	0.97	0.56	0.00	1.00	1.00	0.00	0.00	0.97	0.56	8.36	0.00	1146.7	75.2	160.7
39.98	10.99	2.95	36.0	0.70	25.2	0.97	0.56	0.00	1.00	1.00	0.00	0.00	0.97	0.56	8.44	0.00	1147.8	75.9	162.2
39.88	10.99	2.94	36.0	0.70	25.2	0.97	0.55	0.00	1.00	1.00	0.00	0.00	0.97	0.55	8.53	0.00	1148.9	76.6	163.6
39.78	10.99	2.94	36.0	0.70	25.2	0.97	0.55	0.00	1.00	1.00	0.00	0.00	0.97	0.55	8.61	0.00	1149.9	77.3	165.1
39.68	10.99	2.93	36.0	0.70	25.2	0.97	0.55	0.00	1.00	1.00	0.00	0.00	0.97	0.55	8.70	0.00	1151.0	77.9	166.6
39.58	10.99	2.92	36.0	0.70	25.2	0.96	0.55	0.00	1.00	1.00	0.00	0.00	0.96	0.55	8.78	0.00	1152.0	78.6	168.0
39.48	10.99	2.92	36.0	0.70	25.2	0.96	0.55	0.00	1.00	1.00	0.00	0.00	0.96	0.55	8.87	0.00	1153.1	79.3	169.5

39.38	10.99	2.91	36.0	0.70	25.2	0.96	0.55	0.00	1.00	1.00	0.00	0.00	0.96	0.55	8.95	0.00	1154.2	80.0	170.9
39.28	10.99	2.91	36.0	0.70	25.2	0.96	0.55	0.00	1.00	1.00	0.00	0.00	0.96	0.55	9.03	0.00	1155.2	80.7	172.4
39.18	10.99	2.90	36.0	0.70	25.2	0.96	0.55	0.00	1.00	1.00	0.00	0.00	0.96	0.55	9.12	0.00	1156.3	81.4	173.8
39.08	10.99	2.89	36.0	0.70	25.2	0.95	0.54	0.00	1.00	1.00	0.00	0.00	0.95	0.54	9.20	0.00	1157.3	82.1	175.3
38.98	10.99	2.89	36.0	0.70	25.2	0.95	0.54	0.00	1.00	1.00	0.00	0.00	0.95	0.54	9.29	0.00	1158.4	82.8	176.7
38.88	10.99	2.88	36.0	0.70	25.2	0.95	0.54	0.00	1.00	1.00	0.00	0.00	0.95	0.54	9.37	0.00	1159.4	83.4	178.1
38.78	10.99	2.88	36.0	0.70	25.2	0.95	0.54	0.00	1.00	1.00	0.00	0.00	0.95	0.54	9.46	0.00	1160.5	84.1	179.6
38.68	10.99	2.87	36.0	0.70	25.2	0.95	0.54	0.00	1.00	1.00	0.00	0.00	0.95	0.54	9.54	0.00	1161.5	84.8	181.0
38.58	10.99	2.86	36.0	0.70	25.2	0.94	0.54	0.00	1.00	1.00	0.00	0.00	0.94	0.54	9.63	0.00	1162.5	85.5	182.4
38.48	10.99	2.86	36.0	0.70	25.2	0.94	0.54	0.00	1.00	1.00	0.00	0.00	0.94	0.54	9.71	0.00	1163.6	86.1	183.9
38.38	10.99	2.85	36.0	0.70	25.2	0.94	0.54	0.00	1.00	1.00	0.00	0.00	0.94	0.54	9.79	0.00	1164.6	86.8	185.3
38.28	10.99	2.84	36.0	0.70	25.2	0.94	0.54	0.00	1.00	1.00	0.00	0.00	0.94	0.54	9.88	0.00	1165.6	87.5	186.7
38.18	10.99	2.84	36.0	0.70	25.2	0.93	0.53	0.00	1.00	1.00	0.00	0.00	0.93	0.53	9.96	0.00	1166.7	88.2	188.1
38.08	10.99	2.83	36.0	0.70	25.2	0.93	0.53	0.00	1.00	1.00	0.00	0.00	0.93	0.53	10.05	0.00	1167.7	88.8	189.5
37.98	10.99	2.83	36.0	0.70	25.2	0.93	0.53	0.00	1.00	1.00	0.00	0.00	0.93	0.53	10.13	0.00	1168.7	89.5	190.9
37.88	10.99	2.82	36.0	0.70	25.2	0.93	0.53	0.00	1.00	1.00	0.00	0.00	0.93	0.53	10.22	0.00	1169.7	90.2	192.3
37.78	10.99	2.81	36.0	0.70	25.2	0.93	0.53	0.00	1.00	1.00	0.00	0.00	0.93	0.53	10.30	0.00	1170.8	90.8	193.8
37.68	10.99	2.81	36.0	0.70	25.2	0.92	0.53	0.00	1.00	1.00	0.00	0.00	0.92	0.53	10.39	0.00	1171.8	91.5	195.2
37.58	10.99	2.80	36.0	0.70	25.2	0.92	0.53	0.00	1.00	1.00	0.00	0.00	0.92	0.53	10.47	0.00	1172.8	92.2	196.5
37.47	10.99	2.80	36.0	0.70	25.2	0.92	0.53	0.00	1.00	1.00	0.00	0.00	0.92	0.53	10.55	0.00	1173.8	92.8	197.9
37.37	10.99	2.79	36.0	0.70	25.2	0.92	0.53	0.00	1.00	1.00	0.00	0.00	0.92	0.53	10.64	0.00	1174.8	93.5	199.3
37.27	10.99	2.78	36.0	0.70	25.2	0.92	0.52	0.00	1.00	1.00	0.00	0.00	0.92	0.52	10.72	0.00	1175.8	94.2	200.7
37.17	10.99	2.78	36.0	0.70	25.2	0.91	0.52	0.00	1.00	1.00	0.00	0.00	0.91	0.52	10.81	0.00	1176.8	94.8	202.1
37.07	10.99	2.77	36.0	0.70	25.2	0.91	0.52	0.00	1.00	1.00	0.00	0.00	0.91	0.52	10.89	0.00	1177.8	95.5	203.5
36.97	10.99	2.76	36.0	0.70	25.2	0.91	0.52	0.00	1.00	1.00	0.00	0.00	0.91	0.52	10.98	0.00	1178.8	96.1	204.9
36.87	10.99	2.76	36.0	0.70	25.2	0.91	0.52	0.00	1.00	1.00	0.00	0.00	0.91	0.52	11.06	0.00	1179.8	96.8	206.2
36.77	10.99	2.75	36.0	0.70	25.2	0.91	0.52	0.00	1.00	1.00	0.00	0.00	0.91	0.52	11.15	0.00	1180.8	97.5	207.6
36.67	10.99	2.75	36.0	0.70	25.2	0.90	0.52	0.00	1.00	1.00	0.00	0.00	0.90	0.52	11.23	0.00	1181.8	98.1	209.0
36.57	10.99	2.74	36.0	0.70	25.2	0.90	0.52	0.00	1.00	1.00	0.00	0.00	0.90	0.52	11.31	0.00	1182.8	98.8	210.4
36.47	10.99	2.73	36.0	0.70	25.2	0.90	0.51	0.00	1.00	1.00	0.00	0.00	0.90	0.51	11.40	0.00	1183.8	99.4	211.7
36.37	10.99	2.73	36.0	0.70	25.2	0.90	0.51	0.00	1.00	1.00	0.00	0.00	0.90	0.51	11.48	0.00	1184.8	100.1	213.1
36.27	10.99	2.72	36.0	0.70	25.2	0.90	0.51	0.00	1.00	1.00	0.00	0.00	0.90	0.51	11.57	0.00	1185.8	100.7	214.4
36.17	10.99	2.72	36.0	0.70	25.2	0.89	0.51	0.00	1.00	1.00	0.00	0.00	0.89	0.51	11.65	0.00	1186.8	101.4	215.8
36.07	10.99	2.71	36.0	0.70	25.2	0.89	0.51	0.00	1.00	1.00	0.00	0.00	0.89	0.51	11.74	0.00	1187.8	102.0	217.1
35.97	10.99	2.70	36.0	0.70	25.2	0.89	0.51	0.00	1.00	1.00	0.00	0.00	0.89	0.51	11.82	0.00	1188.8	102.7	218.5
35.87	10.99	2.70	36.0	0.70	25.2	0.89	0.51	0.00	1.00	1.00	0.00	0.00	0.89	0.51	11.91	0.00	1189.7	103.3	219.8
35.77	10.99	2.69	36.0	0.70	25.2	0.89	0.51	0.00	1.00	1.00	0.00	0.00	0.89	0.51	11.99	0.00	1190.7	103.9	221.2
35.67	10.99	2.69	36.0	0.70	25.2	0.88	0.51	0.00	1.00	1.00	0.00	0.00	0.88	0.51	12.07	0.00	1191.7	104.6	222.5
35.57	10.99	2.68	36.0	0.70	25.2	0.88	0.50	0.00	1.00	1.00	0.00	0.00	0.88	0.50	12.16	0.00	1192.7	105.2	223.8
35.47	10.99	2.67	36.0	0.70	25.2	0.88	0.50	0.00	1.00	1.00	0.00	0.00	0.88	0.50	12.24	0.00	1193.6	105.9	225.2
35.37	10.99	2.67	36.0	0.70	25.2	0.88	0.50	0.00	1.00	1.00	0.00	0.00	0.88	0.50	12.33	0.00	1194.6	106.5	226.5
35.27	10.99	2.66	36.0	0.70	25.2	0.88	0.50	0.00	1.00	1.00	0.00	0.00	0.88	0.50	12.41	0.00	1195.6	107.1	227.8
35.17	10.99	2.65	36.0	0.70	25.2	0.87	0.50	0.00	1.00	1.00	0.00	0.00	0.87	0.50	12.50	0.00	1196.5	107.8	229.2
35.07	10.99	2.65	36.0	0.70	25.2	0.87	0.50	0.00	1.00	1.00	0.00	0.00	0.87	0.50	12.58	0.00	1197.5	108.4	230.5
34.97	10.99	2.64	34.0	0.70	23.8	0.82	0.47	0.00	1.00	1.00	0.00	0.00	0.82	0.47	12.67	0.00	1198.4	109.0	231.7
34.87	10.99	2.64	34.0	0.70	23.8	0.81	0.47	0.00	1.00	1.00	0.00	0.00	0.81	0.47	12.75	0.00	1199.3	109.6	232.9
34.77	10.99	2.63	34.0	0.70	23.8	0.81	0.46	0.00	1.00	1.00	0.00	0.00	0.81	0.46	12.83	0.00	1200.2	110.2	234.2
34.67	10.99	2.63	34.0	0.70	23.8	0.81	0.46	0.00	1.00	1.00	0.00	0.00	0.81	0.46	12.92	0.00	1201.1	110.8	235.4
34.57	10.99	2.62	34.0	0.70	23.8	0.81	0.46	0.00	1.00	1.00	0.00	0.00	0.81	0.46	13.00	0.00	1202.0	111.4	236.6
34.47	10.99	2.61	34.0	0.70	23.8	0.81	0.46	0.00	1.00	1.00	0.00	0.00	0.81	0.46	13.09	0.00	1202.8	112.0	237.8
34.37	10.99	2.61	34.0	0.70	23.8	0.81	0.46	0.00	1.00	1.00	0.00	0.00	0.81	0.46	13.17	0.00	1203.7	112.6	239.1
34.27	10.99	2.60	34.0	0.70	23.8	0.80	0.46	0.00	1.00	1.00	0.00	0.00	0.80	0.46	13.26	0.00	1204.6	113.2	240.3
34.17	10.99	2.60	34.0	0.70	23.8	0.80	0.46	0.00	1.00	1.00	0.00	0.00	0.80	0.46	13.34	0.00	1205.5	113.7	241.5
34.07	10.99	2.59	34.0	0.70	23.8	0.80	0.46	0.00	1.00	1.00	0.00	0.00	0.80	0.46	13.43	0.00	1206.4	114.3	242.7
33.97	10.99	2.58	34.0	0.70	23.8	0.80	0.46	0.00	1.00	1.00	0.00	0.00	0.80	0.46	13.51	0.00	1207.3	114.9	243.9
33.87	10.99	2.58	34.0	0.70	23.8	0.80	0.45	0.00	1.00	1.00	0.00	0.00	0.80	0.45	13.59	0.00	1208.1	115.5	245.1
33.77	10.99	2.57	34.0	0.70	23.8	0.79	0.45	0.00	1.00	1.00	0.00	0.00	0.79	0.45	13.68	0.00	1209.0	116.1	246.3
33.67	10.99	2.57	34.0	0.70	23.8	0.79	0.45	0.00	1.00	1.00	0.00	0.00	0.79	0.45	13.76	0.00	1209.9	116.7	247.5
33.57	10.99	2.56	34.0	0.70	23.8	0.79	0.45	0.00	1.00	1.00	0.00	0.00	0.79	0.45	13.85	0.00	1210.8	117.2	248.7
33.47	10.99	2.56	34.0	0.70	23.8	0.79	0.45	0.00	1.00	1.00	0.00	0.00	0.79	0.45	13.93	0.00	1211.6	117.8	249.9
33.37	10.99	2.55	34.0	0.70	23.8	0.79	0.45	0.00	1.00	1.00	0.00	0.00	0.79	0.45	14.02	0.00	1212.5	118.4	251.1
33.27	10.99	2.54	34.0	0.70	23.8	0.79	0.45	0.00	1.00	1.00	0.00	0.00	0.79	0.45	14.10	0.00	1213.4	119.0	252.3
33.17	10.99	2.54	34.0	0.70	23.8	0.78	0.45	0.00	1.00	1.00	0.00	0.00	0.78	0.45	14.19	0.00	1214.2	119.6	253.5
33.07	10.99	2.53	34.0	0.70	23.8	0.78	0.45	0.00	1.00	1.00	0.00	0.00	0.78	0.45	14.27	0.00	1215.1	120.1	254.7
32.97	10.99	2.53	34.0	0.70	23.8	0.78	0.45	0.00	1.00	1.00	0.00	0.00	0.78	0.45	14.35	0.00	1215.9	120.7	255.8
32.87	10.99	2.52	34.0	0.70	23.8	0.78	0.44	0.00	1.00	1.00	0.00	0.00	0.78	0.44	14.44	0.00	1216.8	121.3	257.0
32.77	10.99	2.51	34.0	0.70	23.8	0.78	0.44	0.00	1.00	1.00	0.00	0.00	0.78	0.44	14.52	0.00	1217.6	121.9	258.2
32.67	10.99	2.51	34.0	0.70	23.8	0.77	0.44	0.00	1.00	1.00	0.00	0.00	0.77	0.44	14.61	0.00	1218.5	122.4	259.4
32.57	10.99	2.50	34.0	0.70	23.8	0.77	0.44	0.00	1.00	1.00	0.00	0.00	0.77	0.44	14.69	0.00	1219.4	123.0	260.5
32.46	10.99	2.50	34.0	0.70	23.8	0.77	0.44	0.00	1.00	1.00	0.00	0.00	0.77	0.44	14.78	0.00	1220.2	123.6	261.7
32.36	10.99	2.49	34.0	0.70	23.8	0.77	0.44	0.00	1.00	1.00	0.00	0.00	0.77	0.44	14.86	0.00	1221.0	124.1	262.9
32.26	10.99	2.49	34.0	0.70	23.8	0.77	0.44	0.00	1.00	1.00	0.00	0.00	0.77	0.44	14.94	0.00	1221.9	124.7	264.0
32.16	10.99	2.48	34.0	0.70	23.8	0.77	0.44	0.00	1.00	1.00	0.00	0.00	0.77	0.44	15.03	0.00	1222.7	125.3	265.2
32.06	10.99	2.47	34.0	0.70	23.8	0.76	0.44	0.00	1.00	1.00	0.00	0.00	0.76	0.44	15.11	0.00	1223.6	125.8	266.4
31.96	10.99	2.47	34.0	0.70	23.8	-0.76	0.44	0.00	1.00	1.00	0.00	0.00	-0.76	0.44	15.20	-0.84	1222.7	126.4	266.0
31.86	10.99	2.46	34.0	0.70	23.8	-0.76	0.43	0.00	1.00	1.00	0.00	0.00	-0.76	0.43	15.28	-1.68	1221.9	127.0	265.7
31.76	10.99	2.46	34.0	0.70	23.8	-0.76	0.43	0.00	1.00	1.00	0.00	0.00	-0.76	0.43	15.37	-2.51	1221.1	127.5	265.4
31.66	10.99	2.45	34.0	0.70	23.8	-0.76	0.43	0.00	1.00	1.00	0.00	0.00	-0.76	0.43	15.45	-3.35	1220.2	128.1	265.1
31.56	10.99	2.45	34.0	0.70	23.8	-0.75	0.43	0.00	1.00	1.00	0.00	0.00	-0.75	0.43	15.54	-4.18	1219.4	128.7	264.8
31.46	10.99	2.44	34.0	0.70	23.8	-0.75	0.43	0.00	1.00	1.00	0.00	0.00	-0.75	0.43	15.62	-5.01	1218.6	129.2	264.5
31.36	10.99	2.43	34.0	0.70	23.8	-0.75	0.43	0.00	1.00	1.00	0.00	0.00	-0.75	0.43	15.70	-5.83	1217.7	129.8	264.2
31.26	10.99	2.43	34.0	0.70	23.8	-0.75	0.43	0.00	1.00	1.00	0.00	0.00	-0.75	0.43	15.79	-6.66	1216.9	130.3	263.9
31.16	10.99	2.42	34.0	0.70	23.8	-0.75	0.43	0.00	1.00	1.00	0.00	0.00	-0.75	0.43	15.87	-7.48	1216.1	130.9	263.5
31.06	10.99	2.42	34.0	0.70	23.8	-0.75	0.43	0.00	1.00	1.00	0.00	0.00	-0.75	0.43	15.96	-8.30	1215.3	131.4	263.2
30.96	10.99	2.41	34.0	0.70	23.8	-0.74	0.43	0.00	1.00	1.00	0.00	0.00	-0.74	0.43	16.04	-9.12	1214.5	132.0	262.9
30.86	10.99	2.40	34.0	0.70	23.8	-0.74	0.42	0.00	1.00	1.00	0.00	0.00	-0.74	0.42	16.13	-9.94	1213.6	132.5	262.6
30.76	10.99	2.40	34.0	0.70	23.8	-0.74	0.42	0.00	1.00	1.00	0.00	0.00	-0.74	0.42	16.21	-10.76	1212.8	133.1	262.3
30.66	10.99	2.39	34.0	0.70	23.8	-0.74	0.42	0.00	1.00	1.00	0.00	0.00	-0.74	0.42	16.30	-11.57	1212.0	133.6	262.0
30.56	10.99	2.39	34.0	0.70	23.8	-0.74	0.42	0.00	1.00	1.00	0.00	0.00	-0.74	0.42	16.38	-12.38	1211.2	134.2	261.7
30.46	10.99	2.38	34.0	0.70	23.8	-0.74	0.42	0.00	1.00	1.00	0.00	0.00	-0.74	0.42	16.46	-13.19	1210.4	134.7	261.4
30.36	10.99	2.38	34.0	0.70	23.8	-0.73	0.42	0.00	1.00	1.00	0.00	0.00	-0.73	0.42	16.55	-14.00	1209.6	135.3	261.1
30.26	10.99	2.37	34.0	0.70	23.8	-0.73	0.42	0.00	1.00	1.00	0.00	0.00	-0.73	0.42	16.63	-14.81	1208.8	135.8	260.8
30.16	10.99	2.36	34.0	0.70	23.8	-0.73	0.42	0.00	1.00	1.00	0.00	0.00	-0.73	0.42	16.72	-15.61	1208.0	136.4	260.5
30.06	10.99	2.36	34.0	0.70	23.8	-0.73	0.42	0.00	1.00	1.00	0.00	0.00	-0.73	0.42	16.80	-16.41	1207.2	136.9	260.2
29.96	10.99	2.35	34.0	0.70	23.8	-0.73	0.42	0.00	1.00	1.00	0.00	0.00	-0.73	0.42	16.89	-17.21	1206.4	137.5	259.9
29.86	10.99	2.35	34.0	0.70	23.8	-0.72	0.41	0.00	1.00	1.00	0.00	0.00	-0.72	0.41	16.97	-18.01	1205.6	138.0	259.6
29.76	10.99	2.34	34.0	0.70	23.8	-0.72	0.41	0.00	1.00	1.00	0.00	0.00	-0.72	0.41	17.06	-18.81	1204.8	138.5	259.3
29.66	10.99	2.33	34.0	0.70	23.8	-0.72	0.41	0.00	1.00	1.00	0.00	0.00	-0.72	0.41	17.14	-19.60	1204.0	139.1	259.0
29.56	10.99	2.33	34.0	0.70	23.8	-0.72	0.41	0.00	1.00	1.00	0.00	0.00	-0.72	0.41	17.22	-20.39	1203.2	139.6	258.7
29.46	10.99	2.32	34.0	0.70	23.8	-0.72	0.41	0.00	1.00	1.00	0.00	0.00	-0.72	0.41	17.31	-21.18	1202.4	140.1	258.4
29.36	10.99	2.32	34.0	0.70	23.8	-0.72	0.41	0.00	1.00	1.00	0.00	0.00	-0.72	0.41	17.39	-21.97	1201.6	140.7	258.1
29.26	10.99	2.31	34.0	0.70	23.8	-0.71	0.41	0.00	1.00	1.00	0.00	0.00	-0.71	0.41	17.48	-22.76	1200.8	141.2	257.8
29.16	10.99	2.31	34.0	0.70	23.8	-0.71	0.41	0.00	1.00	1.00	0.00	0.00	-0.71	0.41	17.56	-23.54	1200.0	141.7	257.5
29.06	10.99	2.30	34.0	0.70	23.8	-0.71	0.41	0.00	1.00	1.00	0.00	0.00	-0.71	0.41	17.65	-24.32	1199.3	142.3	257.2
28.96	10.99	2.29	34.0	0.70	23.8	-0.71	0.40	0.00	1.00	1.00	0.00	0.00	-0.71	0.40	17.73	-25.10	1198.5	142.8	256.9
28.86	10.99	2.29	34.0	0.70	23.8	-0.71	0.40	0.00	1.00	1.00	0.00	0.00	-0.71	0.40	17.82	-25.88	1197.7	143.3	256.6
28.76	10.99	2.28	34.0	0.70	23.8	-0.70	0.40	0.00	1.00	1.00	0.00	0.00	-0.70	0.40	17.90	-26.66	1196.9	143.9	256.4
28.66	10.99	2.28	34.0	0.70	23.8	-0.70	0.40	0.00	1.00	1.00	0.00	0.00	-0.70	0.40	17.98	-27.43	1196.1	144.4	256.1
28.56	10.99	2.27	34.0	0.70	23.8	-0.70	0.40	0.00	1.00	1.00	0.00	0.00	-0.70	0.40	18.07	-28.20	1195.4	144.9	255.8
28.46	10.99	2.27	34.0	0.70	23.8	-0.70	0.40	0.00	1.00	1.00	0.00	0.00	-0.70	0.40	18.15	-28.97	1194.6	145.4	255.5
28.36	10.99	2.26	34.0	0.70	23.8	-0.70	0.40	0.00	1.00	1.00	0.00	0.00	-0.70	0.40	18.24	-29.74	1193.8	146.0	255.2
28.26	10.99	2.25	34.0	0.70	23.8	-0.70	0.40	0.00	1.00	1.00	0.00	0.00	-0.70	0.40	18.32	-30.51	1193.1	146.5	254.9
28.16	10.99	2.25	34.0	0.70	23.8	-0.69	0.40	0.00	1.00	1.00	0.00	0.00	-0.69	0.40	18.41	-31.27	1192.3	147.0	254.6
28.06	10.99	2.24	34.0	0.70	23.8	-0.69	0.40	0.00	1.00	1.00	0.00	0.00	-0.69	0.40	18.49	-32.03	1191.5	147.5	254.3
27.96	10.99	2.24	34.0	0.70	23.8	-0.69	0.39	0.00	1.00	1.00	0.00	0.00	-0.69	0.39	18.58	-32.80	1190.8	148.0	254.1
27.86	10.99	2.23	34.0	0.70	23.8	-0.69	0.39	0.00	1.00	1.00	0.00	0.00	-0.69	0.39	18.66	-33.55	1190.0	148.6	253.8
27.76	10.99	2.22	34.0	0.70	23.8	-0.69	0.39	0.00	1.00	1.00	0.00	0.00	-0.69	0.39	18.74	-34.31	1189.3	149.1	253.5

27.66	10.99	2.22	34.0	0.70	23.8	-0.69	0.39	0.00	1.00	1.00	0.00	0.00	-0.69	0.39	18.83	-35.06	1188.5	149.6	253.2
27.56	10.99	2.21	34.0	0.70	23.8	-0.68	0.39	0.00	1.00	1.00	0.00	0.00	-0.68	0.39	18.91	-35.82	1187.8	150.1	252.9
27.45	10.99	2.21	34.0	0.70	23.8	-0.68	0.39	0.00	1.00	1.00	0.00	0.00	-0.68	0.39	19.00	-36.57	1187.0	150.6	252.6
27.35	10.99	2.20	34.0	0.70	23.8	-0.68	0.39	0.00	1.00	1.00	0.00	0.00	-0.68	0.39	19.08	-37.32	1186.3	151.1	252.4
27.25	10.99	2.20	34.0	0.70	23.8	-0.68	0.39	0.00	1.00	1.00	0.00	0.00	-0.68	0.39	19.17	-38.06	1185.5	151.6	252.1
27.15	10.99	2.19	34.0	0.70	23.8	-0.68	0.39	0.00	1.00	1.00	0.00	0.00	-0.68	0.39	19.25	-38.81	1184.8	152.2	251.8
27.05	10.99	2.18	34.0	0.70	23.8	-0.67	0.39	0.00	1.00	1.00	0.00	0.00	-0.67	0.39	19.34	-39.55	1184.0	152.7	251.5
26.95	10.99	2.18	34.0	0.70	23.8	-0.67	0.38	0.00	1.00	1.00	0.00	0.00	-0.67	0.38	19.42	-40.29	1183.3	153.2	251.2
26.85	10.99	2.17	34.0	0.70	23.8	-0.67	0.38	0.00	1.00	1.00	0.00	0.00	-0.67	0.38	19.50	-41.03	1182.5	153.7	251.0
26.75	10.99	2.17	34.0	0.70	23.8	-0.67	0.38	0.00	1.00	1.00	0.00	0.00	-0.67	0.38	19.59	-41.77	1181.8	154.2	250.7
26.65	10.99	2.16	34.0	0.70	23.8	-0.67	0.38	0.00	1.00	1.00	0.00	0.00	-0.67	0.38	19.67	-42.50	1181.1	154.7	250.4
26.55	10.99	2.16	34.0	0.70	23.8	-0.67	0.38	0.00	1.00	1.00	0.00	0.00	-0.67	0.38	19.76	-43.23	1180.3	155.2	250.1
26.45	10.99	2.15	34.0	0.70	23.8	-0.66	0.38	0.00	1.00	1.00	0.00	0.00	-0.66	0.38	19.84	-43.96	1179.6	155.7	249.9
26.35	10.99	2.14	34.0	0.70	23.8	-0.66	0.38	0.00	1.00	1.00	0.00	0.00	-0.66	0.38	19.93	-44.69	1178.9	156.2	249.6
26.25	10.99	2.14	34.0	0.70	23.8	-0.66	0.38	0.00	1.00	1.00	0.00	0.00	-0.66	0.38	20.01	-45.42	1178.2	156.7	249.3
26.15	10.99	2.13	34.0	0.70	23.8	-0.66	0.38	0.00	1.00	1.00	0.00	0.00	-0.66	0.38	20.10	-46.15	1177.4	157.2	249.1
26.05	10.99	2.13	34.0	0.70	23.8	-0.66	0.38	0.00	1.00	1.00	0.00	0.00	-0.66	0.38	20.18	-46.87	1176.7	157.7	248.8
25.95	10.99	2.12	34.0	0.70	23.8	-0.65	0.37	0.00	1.00	1.00	0.00	0.00	-0.65	0.37	20.26	-47.59	1176.0	158.2	248.5
25.85	10.99	2.11	34.0	0.70	23.8	-0.65	0.37	0.00	1.00	1.00	0.00	0.00	-0.65	0.37	20.35	-48.31	1175.3	158.7	248.2
25.75	10.99	2.11	34.0	0.70	23.8	-0.65	0.37	0.00	1.00	1.00	0.00	0.00	-0.65	0.37	20.43	-49.03	1174.6	159.2	248.0
25.65	10.99	2.10	34.0	0.70	23.8	-0.65	0.37	0.00	1.00	1.00	0.00	0.00	-0.65	0.37	20.52	-49.74	1173.8	159.7	247.7
25.55	10.99	2.10	34.0	0.70	23.8	-0.65	0.37	0.00	1.00	1.00	0.00	0.00	-0.65	0.37	20.60	-50.45	1173.1	160.2	247.4
25.45	10.99	2.09	34.0	0.70	23.8	-0.65	0.37	0.00	1.00	1.00	0.00	0.00	-0.65	0.37	20.69	-51.16	1172.4	160.7	247.2
25.35	10.99	2.09	34.0	0.70	23.8	-0.64	0.37	0.00	1.00	1.00	0.00	0.00	-0.64	0.37	20.77	-51.87	1171.7	161.1	246.9
25.25	10.99	2.08	34.0	0.70	23.8	-0.64	0.37	0.00	1.00	1.00	0.00	0.00	-0.64	0.37	20.86	-52.58	1171.0	161.6	246.6
25.15	10.99	2.07	34.0	0.70	23.8	-0.64	0.37	0.00	1.00	1.00	0.00	0.00	-0.64	0.37	20.94	-53.29	1170.3	162.1	246.4
25.05	10.99	2.07	34.0	0.70	23.8	-0.64	0.36	0.00	1.00	1.00	0.00	0.00	-0.64	0.36	21.02	-53.99	1169.6	162.6	246.1
24.95	10.99	2.06	34.0	0.70	23.8	-0.64	0.36	0.00	1.00	1.00	0.00	0.00	-0.64	0.36	21.11	-54.69	1168.9	163.1	245.8
24.85	10.99	2.06	34.0	0.70	23.8	-0.63	0.36	0.00	1.00	1.00	0.00	0.00	-0.63	0.36	21.19	-55.39	1168.2	163.6	245.6
24.75	10.99	2.05	34.0	0.70	23.8	-0.63	0.36	0.00	1.00	1.00	0.00	0.00	-0.63	0.36	21.28	-56.09	1167.5	164.1	245.3
24.65	10.99	2.04	34.0	0.70	23.8	-0.63	0.36	0.00	1.00	1.00	0.00	0.00	-0.63	0.36	21.36	-56.78	1166.8	164.5	245.1
24.55	10.99	2.04	34.0	0.70	23.8	-0.63	0.36	0.00	1.00	1.00	0.00	0.00	-0.63	0.36	21.45	-57.48	1166.1	165.0	244.8
24.45	10.99	2.03	30.0	0.70	21.0	-0.55	0.31	0.00	1.00	1.00	0.00	0.00	-0.55	0.31	21.53	-58.08	1165.5	165.4	244.6
24.35	10.99	2.03	30.0	0.70	21.0	-0.55	0.31	0.00	1.00	1.00	0.00	0.00	-0.55	0.31	21.62	-58.68	1164.9	165.9	244.4
24.25	10.99	2.03	30.0	0.70	21.0	-0.54	0.31	0.00	1.00	1.00	0.00	0.00	-0.54	0.31	21.70	-59.28	1164.3	166.3	244.1
24.15	10.99	2.02	30.0	0.70	21.0	-0.54	0.31	0.00	1.00	1.00	0.00	0.00	-0.54	0.31	21.78	-59.88	1163.7	166.7	243.9
24.05	10.99	2.02	30.0	0.70	21.0	-0.54	0.31	0.00	1.00	1.00	0.00	0.00	-0.54	0.31	21.87	-60.47	1163.1	167.2	243.7
23.95	10.99	2.01	30.0	0.70	21.0	-0.54	0.31	0.00	1.00	1.00	0.00	0.00	-0.54	0.31	21.95	-61.07	1162.5	167.6	243.5
23.85	10.99	2.01	30.0	0.70	21.0	-0.54	0.31	0.00	1.00	1.00	0.00	0.00	-0.54	0.31	22.04	-61.66	1161.9	168.0	243.2
23.75	10.99	2.00	30.0	0.70	21.0	-0.54	0.31	0.00	1.00	1.00	0.00	0.00	-0.54	0.31	22.12	-62.25	1161.3	168.4	243.0
23.65	10.99	2.00	30.0	0.70	21.0	-0.54	0.31	0.00	1.00	1.00	0.00	0.00	-0.54	0.31	22.21	-62.84	1160.7	168.8	242.8
23.55	10.99	1.99	30.0	0.70	21.0	-0.54	0.31	0.00	1.00	1.00	0.00	0.00	-0.54	0.31	22.29	-63.43	1160.1	169.3	242.6
23.45	10.99	1.99	30.0	0.70	21.0	-0.53	0.31	0.00	1.00	1.00	0.00	0.00	-0.53	0.31	22.38	-64.02	1159.6	169.7	242.4
23.35	10.99	1.98	30.0	0.70	21.0	-0.53	0.30	0.00	1.00	1.00	0.00	0.00	-0.53	0.30	22.46	-64.61	1159.0	170.1	242.1
23.25	10.99	1.98	30.0	0.70	21.0	-0.53	0.30	0.00	1.00	1.00	0.00	0.00	-0.53	0.30	22.54	-65.19	1158.4	170.5	241.9
23.15	10.99	1.97	30.0	0.70	21.0	-0.53	0.30	0.00	1.00	1.00	0.00	0.00	-0.53	0.30	22.63	-65.78	1157.8	170.9	241.7
23.05	10.99	1.97	30.0	0.70	21.0	-0.53	0.30	0.00	1.00	1.00	0.00	0.00	-0.53	0.30	22.71	-66.36	1157.2	171.4	241.5
22.95	10.99	1.96	30.0	0.70	21.0	-0.53	0.30	0.00	1.00	1.00	0.00	0.00	-0.53	0.30	22.80	-66.94	1156.6	171.8	241.3
22.85	10.99	1.96	30.0	0.70	21.0	-0.53	0.30	0.00	1.00	1.00	0.00	0.00	-0.53	0.30	22.88	-67.52	1156.1	172.2	241.0
22.75	10.99	1.95	30.0	0.70	21.0	-0.53	0.30	0.00	1.00	1.00	0.00	0.00	-0.53	0.30	22.97	-68.10	1155.5	172.6	240.8
22.65	10.99	1.95	30.0	0.70	21.0	-0.52	0.30	0.00	1.00	1.00	0.00	0.00	-0.52	0.30	23.05	-68.68	1154.9	173.0	240.6
22.55	10.99	1.95	30.0	0.70	21.0	-0.52	0.30	0.00	1.00	1.00	0.00	0.00	-0.52	0.30	23.14	-69.25	1154.3	173.4	240.4
22.44	10.99	1.94	30.0	0.70	21.0	-0.52	0.30	0.00	1.00	1.00	0.00	0.00	-0.52	0.30	23.22	-69.83	1153.8	173.9	240.2
22.34	10.99	1.94	30.0	0.70	21.0	-0.52	0.30	0.00	1.00	1.00	0.00	0.00	-0.52	0.30	23.30	-70.40	1153.2	174.3	240.0
22.24	10.99	1.93	30.0	0.70	21.0	-0.52	0.30	0.00	1.00	1.00	0.00	0.00	-0.52	0.30	23.39	-70.97	1152.6	174.7	239.7
22.14	10.99	1.93	30.0	0.70	21.0	-0.52	0.30	0.00	1.00	1.00	0.00	0.00	-0.52	0.30	23.47	-71.54	1152.0	175.1	239.5
22.04	10.99	1.92	30.0	0.70	21.0	-0.52	0.30	0.00	1.00	1.00	0.00	0.00	-0.52	0.30	23.56	-72.11	1151.5	175.5	239.3
21.94	10.99	1.92	30.0	0.70	21.0	-0.52	0.29	0.00	1.00	1.00	0.00	0.00	-0.52	0.29	23.64	-72.68	1150.9	175.9	239.1
21.84	10.99	1.91	30.0	0.70	21.0	-0.51	0.29	0.00	1.00	1.00	0.00	0.00	-0.51	0.29	23.73	-73.25	1150.3	176.3	238.9
21.74	10.99	1.91	30.0	0.70	21.0	-0.51	0.29	0.00	1.00	1.00	0.00	0.00	-0.51	0.29	23.81	-73.81	1149.8	176.7	238.7
21.64	10.99	1.90	30.0	0.70	21.0	-0.51	0.29	0.00	1.00	1.00	0.00	0.00	-0.51	0.29	23.90	-74.37	1149.2	177.1	238.5
21.54	10.99	1.90	30.0	0.70	21.0	-0.51	0.29	0.00	1.00	1.00	0.00	0.00	-0.51	0.29	23.98	-74.94	1148.6	177.5	238.3
21.44	10.99	1.89	30.0	0.70	21.0	-0.51	0.29	0.00	1.00	1.00	0.00	0.00	-0.51	0.29	24.06	-75.50	1148.1	177.9	238.1
21.34	10.99	1.89	30.0	0.70	21.0	-0.51	0.29	0.00	1.00	1.00	0.00	0.00	-0.51	0.29	24.15	-76.06	1147.5	178.3	237.8
21.24	10.99	1.88	30.0	0.70	21.0	-0.51	0.29	0.00	1.00	1.00	0.00	0.00	-0.51	0.29	24.23	-76.61	1147.0	178.7	237.6
21.14	10.99	1.88	30.0	0.70	21.0	-0.51	0.29	0.00	1.00	1.00	0.00	0.00	-0.51	0.29	24.32	-77.17	1146.4	179.1	237.4
21.04	10.99	1.88	30.0	0.70	21.0	-0.50	0.29	0.00	1.00	1.00	0.00	0.00	-0.50	0.29	24.40	-77.72	1145.9	179.5	237.2
20.94	10.99	1.87	30.0	0.70	21.0	-0.50	0.29	0.00	1.00	1.00	0.00	0.00	-0.50	0.29	24.49	-78.28	1145.3	179.9	237.0
20.84	10.99	1.87	30.0	0.70	21.0	-0.50	0.29	0.00	1.00	1.00	0.00	0.00	-0.50	0.29	24.57	-78.83	1144.7	180.3	236.8
20.74	10.99	1.86	30.0	0.70	21.0	-0.50	0.29	0.00	1.00	1.00	0.00	0.00	-0.50	0.29	24.65	-79.38	1144.2	180.7	236.6
20.64	10.99	1.86	30.0	0.70	21.0	-0.50	0.29	0.00	1.00	1.00	0.00	0.00	-0.50	0.29	24.74	-79.93	1143.6	181.1	236.4
20.54	10.99	1.85	30.0	0.70	21.0	-0.50	0.28	0.00	1.00	1.00	0.00	0.00	-0.50	0.28	24.82	-80.48	1143.1	181.5	236.2
20.44	10.99	1.85	30.0	0.70	21.0	-0.50	0.28	0.00	1.00	1.00	0.00	0.00	-0.50	0.28	24.91	-81.03	1142.6	181.9	236.0
20.34	10.99	1.84	30.0	0.70	21.0	-0.50	0.28	0.00	1.00	1.00	0.00	0.00	-0.50	0.28	24.99	-81.57	1142.0	182.3	235.8
20.24	10.99	1.84	30.0	0.70	21.0	-0.49	0.28	0.00	1.00	1.00	0.00	0.00	-0.49	0.28	25.08	-82.11	1141.5	182.7	235.6
20.14	10.99	1.83	30.0	0.70	21.0	-0.49	0.28	0.00	1.00	1.00	0.00	0.00	-0.49	0.28	25.16	-82.66	1140.9	183.1	235.4
20.04	10.99	1.83	30.0	0.70	21.0	-0.49	0.28	0.00	1.00	1.00	0.00	0.00	-0.49	0.28	25.25	-83.20	1140.4	183.5	235.2
19.94	10.99	1.82	30.0	0.70	21.0	-0.49	0.28	0.00	1.00	1.00	0.00	0.00	-0.49	0.28	25.33	-83.74	1139.8	183.9	235.0
19.84	10.99	1.82	30.0	0.70	21.0	-0.49	0.28	0.00	1.00	1.00	0.00	0.00	-0.49	0.28	25.41	-84.28	1139.3	184.3	234.8
19.74	10.99	1.81	30.0	0.70	21.0	-0.49	0.28	0.00	1.00	1.00	0.00	0.00	-0.49	0.28	25.50	-84.81	1138.8	184.7	234.6
19.64	10.99	1.81	30.0	0.70	21.0	-0.49	0.28	0.00	1.00	1.00	0.00	0.00	-0.49	0.28	25.58	-85.35	1138.2	185.1	234.4
19.54	10.99	1.81	30.0	0.70	21.0	-0.49	0.28	0.00	1.00	1.00	0.00	0.00	-0.49	0.28	25.67	-85.88	1137.7	185.5	234.2
19.44	10.99	1.80	0.0	0.70	0.0	0.00	0.00	0.35	1.00	1.00	-0.35	0.35	-0.35	0.35	25.75	-86.27	1137.3	185.9	234.2
19.34	10.99	1.80	0.0	0.70	0.0	0.00	0.00	0.35	1.00	1.00	-0.35	0.35	-0.35	0.35	25.84	-86.65	1136.9	186.4	234.2
19.24	10.99	1.79	0.0	0.70	0.0	0.00	0.00	0.35	1.00	1.00	-0.35	0.35	-0.35	0.35	25.92	-87.04	1136.5	186.9	234.2
19.14	10.99	1.79	0.0	0.70	0.0	0.00	0.00	0.35	1.00	1.00	-0.35	0.35	-0.35	0.35	26.01	-87.42	1136.2	187.4	234.2
19.04	10.99	1.78	0.0	0.70	0.0	0.00	0.00	0.35	1.00	1.00	-0.35	0.35	-0.35	0.35	26.09	-87.81	1135.8	187.8	234.2
18.94	10.99	1.78	0.0	0.70	0.0	0.00	0.00	0.35	1.00	1.00	-0.35	0.35	-0.35	0.35	26.17	-88.20	1135.4	188.3	234.2
18.84	10.99	1.77	0.0	0.70	0.0	0.00	0.00	0.35	1.00	1.00	-0.35	0.35	-0.35	0.35	26.26	-88.58	1135.0	188.8	234.2
18.74	10.99	1.77	0.0	0.70	0.0	0.00	0.00	0.35	1.00	1.00	-0.35	0.35	-0.35	0.35	26.34	-88.97	1134.6	189.2	234.2
18.64	10.99	1.76	0.0	0.70	0.0	0.00	0.00	0.35	1.00	1.00	-0.35	0.35	-0.35	0.35	26.43	-89.35	1134.2	189.7	234.2
18.54	10.99	1.76	0.0	0.70	0.0	0.00	0.00	0.35	1.00	1.00	-0.35	0.35	-0.35	0.35	26.51	-89.74	1133.8	190.2	234.2
18.44	10.99	1.75	0.0	0.70	0.0	0.00	0.00	0.35	1.00	1.00	-0.35	0.35	-0.35	0.35	26.60	-90.12	1133.5	190.6	234.2
18.34	10.99	1.75	0.0	0.70	0.0	0.00	0.00	0.35	1.00	1.00	-0.35	0.35	-0.35	0.35	26.68	-90.51	1133.1	191.1	234.2
18.24	10.99	1.74	0.0	0.70	0.0	0.00	0.00	0.35	1.00	1.00	-0.35	0.35	-0.35	0.35	26.77	-90.89	1132.7	191.6	234.2
18.14	10.99	1.74	0.0	0.70	0.0	0.00	0.00	0.35	1.00	1.00	-0.35	0.35	-0.35	0.35	26.85	-91.28	1132.3	192.1	234.2
18.04	10.99	1.73	0.0	0.70	0.0	0.00	0.00	0.35	1.00	1.00	-0.35	0.35	-0.35	0.35	26.93	-91.67	1131.9	192.5	234.2
17.94	10.99	1.73	0.0	0.70	0.0	0.00	0.00	0.35	1.00	1.00	-0.35	0.35	-0.35	0.35	27.02	-92.05	1131.5	193.0	234.2
17.84	10.99	1.72	0.0	0.70	0.0	0.00	0.00	0.35	1.00	1.00	-0.35	0.35	-0.35	0.35	27.10	-92.44	1131.1	193.5	234.2
17.74	10.99	1.72	0.0	0.70	0.0	0.00	0.00	0.35	1.00	1.00	-0.35	0.35	-0.35	0.35	27.19	-92.82	1130.8	193.9	234.2
17.64	10.99	1.71	0.0	0.70	0.0	0.00	0.00	0.35	1.00	1.00	-0.35	0.35	-0.35	0.35	27.27	-93.21	1130.4	194.4	234.2
17.54	10.99	1.71	0.0	0.70	0.0	0.00	0.00	0.35	1.00	1.00	-0.35	0.35	-0.35	0.35	27.36	-93.59	1130.0	194.9	234.2
17.43	10.99	1.70	0.0	0.70	0.0	0.00	0.00	0.35	1.00	1.00	-0.35	0.35	-0.35	0.35	27.44	-93.98	1129.6	195.3	234.2
17.33	10.99	1.70	0.0	0.70	0.0	0.00	0.00	0.35	1.00	1.00	-0.35	0.35	-0.35	0.35	27.53	-94.36	1129.2	195.8	234.2
17.23	10.99	1.69	0.0	0.70	0.0	0.00	0.00	0.35	1.00	1.00	-0.35	0.35	-0.35	0.35	27.61	-94.75	1128.8	196.3	234.2
17.13	10.99	1.69	0.0	0.70	0.0	0.00	0.00	0.35	1.00	1.00	-0.35	0.35	-0.35	0.35	27.69	-95.13	1128.4	196.8	234.2
17.03	10.99	1.68	0.0	0.70	0.0	0.00	0.00	0.35	1.00	1.00	-0.35	0.35	-0.35	0.35	27.78	-95.52	1128.1	197.2	234.2
16.93	10.99	1.68	0.0	0.70	0.0	0.00	0.00	0.35	1.00	1.00	-0.35	0.35	-0.35	0.35	27.86	-95.91	1127.7	197.7	234.2
16.83	10.99	1.67	0.0	0.70	0.0	0.00	0.00	0.35	1.00	1.00	-0.35	0.35	-0.35	0.35	27.95	-96.29	1127.3	198.2	234.2
16.73	10.99	1.67	0.0	0.70	0.0	0.00	0.00	0.35	1.00	1.00	-0.35	0.35	-0.35	0.35	28.03	-96.68	1126.9	198.6	234.2
16.63	10.99	1.66	0.0	0.70	0.0	0.00	0.00	0.35	1.00	1.00	-0.35	0.35	-0.35	0.35	28.12	-97.06	1126.5	199.1	234.2
16.53	10.99	1.66	0.0	0.70	0.0	0.00	0.00	0.35	1.00	1.00	-0.35	0.35	-0.35	0.35	28.20	-97.45	1126.1	199.6	234.2
16.43	10.99	1.65	0.0	0.70	0.0	0.00	0.00	0.35	1.00	1.00	-0.35	0.35	-0.35	0.35	28.29	-97.83	1125.7	200.0	234.2
16.33	10.99	1.65	0.0	0.70	0.0	0.00	0.00	0.35	1.00	1.00	-0.35	0.35	-0.35	0.35	28.37	-98.22	1125.4	200.5	234.2
16.23	10.99	1.65	0.0	0.70	0.0	0.00	0.00	0.35	1.00	1.00	-0.35	0.35	-0.35	0.35	28.45	-98.60	1125.0	201.0	234.2
16.13	10.99	1.64	0.0	0.70	0.0	0.00	0.00	0.35	1.00	1.00	-0.35	0.35	-0.35	0.35	28.54	-98.99	1124.6	201.5	234.2
16.03	10.99	1.64	0.0	0.70	0.0	0.00	0.00	0.35	1.00	1.00	-0.35	0.35	-0.35	0.35	28.62	-99.37	1124.2	201.9	234.2

15.93	10.99	1.63	0.0	0.70	0.0	0.00	0.00	0.35	1.00	1.00	-0.35	0.35	-0.35	0.35	28.71	-99.76	1123.8	202.4	234.2
15.83	10.99	1.63	0.0	0.70	0.0	0.00	0.00	0.35	1.00	1.00	-0.35	0.35	-0.35	0.35	28.79	-100.15	1123.4	202.9	234.2
15.73	10.99	1.62	0.0	0.70	0.0	0.00	0.00	0.35	1.00	1.00	-0.35	0.35	-0.35	0.35	28.88	-100.53	1123.0	203.3	234.2
15.63	10.99	1.62	0.0	0.70	0.0	0.00	0.00	0.35	1.00	1.00	-0.35	0.35	-0.35	0.35	28.96	-100.92	1122.7	203.8	234.2
15.53	10.99	1.61	0.0	0.70	0.0	0.00	0.00	0.35	1.00	1.00	-0.35	0.35	-0.35	0.35	29.05	-101.30	1122.3	204.3	234.2
15.43	10.99	1.61	0.0	0.70	0.0	0.00	0.00	0.35	1.00	1.00	-0.35	0.35	-0.35	0.35	29.13	-101.69	1121.9	204.7	234.2
15.33	10.99	1.60	0.0	0.70	0.0	0.00	0.00	0.35	1.00	1.00	-0.35	0.35	-0.35	0.35	29.21	-102.07	1121.5	205.2	234.2
15.23	10.99	1.60	0.0	0.70	0.0	0.00	0.00	0.35	1.00	1.00	-0.35	0.35	-0.35	0.35	29.30	-102.46	1121.1	205.7	234.2
15.13	10.99	1.59	0.0	0.70	0.0	0.00	0.00	0.35	1.00	1.00	-0.35	0.35	-0.35	0.35	29.38	-102.84	1120.7	206.2	234.2
15.03	10.99	1.59	0.0	0.70	0.0	0.00	0.00	0.35	1.00	1.00	-0.35	0.35	-0.35	0.35	29.47	-103.23	1120.3	206.6	234.2
14.93	10.99	1.58	0.0	0.70	0.0	0.00	0.00	0.35	1.00	1.00	-0.35	0.35	-0.35	0.35	29.55	-103.62	1120.0	207.1	234.2
14.83	10.99	1.58	0.0	0.70	0.0	0.00	0.00	0.35	1.00	1.00	-0.35	0.35	-0.35	0.35	29.64	-104.00	1119.6	207.6	234.2
14.73	10.99	1.57	0.0	0.70	0.0	0.00	0.00	0.35	1.00	1.00	-0.35	0.35	-0.35	0.35	29.72	-104.39	1119.2	208.0	234.2
14.63	10.99	1.57	0.0	0.70	0.0	0.00	0.00	0.35	1.00	1.00	-0.35	0.35	-0.35	0.35	29.81	-104.77	1118.8	208.5	234.2
14.53	10.99	1.56	0.0	0.70	0.0	0.00	0.00	0.35	1.00	1.00	-0.35	0.35	-0.35	0.35	29.89	-105.16	1118.4	209.0	234.2
14.43	10.99	1.56	0.0	0.70	0.0	0.00	0.00	0.35	1.00	1.00	-0.35	0.35	-0.35	0.35	29.97	-105.54	1118.0	209.4	234.2
14.33	10.99	1.55	0.0	0.70	0.0	0.00	0.00	0.35	1.00	1.00	-0.35	0.35	-0.35	0.35	30.06	-105.93	1117.7	209.9	234.2
14.23	10.99	1.55	0.0	0.70	0.0	0.00	0.00	0.35	1.00	1.00	-0.35	0.35	-0.35	0.35	30.14	-106.31	1117.3	210.4	234.2
14.13	10.99	1.54	0.0	0.70	0.0	0.00	0.00	0.35	1.00	1.00	-0.35	0.35	-0.35	0.35	30.23	-106.70	1116.9	210.9	234.2
14.03	10.99	1.54	0.0	0.70	0.0	0.00	0.00	0.35	1.00	1.00	-0.35	0.35	-0.35	0.35	30.31	-107.08	1116.5	211.3	234.2
13.93	10.99	1.53	0.0	0.70	0.0	0.00	0.00	0.35	1.00	1.00	-0.35	0.35	-0.35	0.35	30.40	-107.47	1116.1	211.8	234.2
13.83	10.99	1.53	0.0	0.70	0.0	0.00	0.00	0.35	1.00	1.00	-0.35	0.35	-0.35	0.35	30.48	-107.86	1115.7	212.3	234.2
13.73	10.99	1.52	0.0	0.70	0.0	0.00	0.00	0.35	1.00	1.00	-0.35	0.35	-0.35	0.35	30.57	-108.24	1115.3	212.7	234.2
13.63	10.99	1.52	0.0	0.70	0.0	0.00	0.00	0.35	1.00	1.00	-0.35	0.35	-0.35	0.35	30.65	-108.63	1115.0	213.2	234.2
13.53	10.99	1.51	0.0	0.70	0.0	0.00	0.00	0.35	1.00	1.00	-0.35	0.35	-0.35	0.35	30.73	-109.01	1114.6	213.7	234.2
13.43	10.99	1.51	0.0	0.70	0.0	0.00	0.00	0.35	1.00	1.00	-0.35	0.35	-0.35	0.35	30.82	-109.40	1114.2	214.1	234.2
13.33	10.99	1.50	0.0	0.70	0.0	0.00	0.00	0.35	1.00	1.00	-0.35	0.35	-0.35	0.35	30.90	-109.78	1113.8	214.6	234.2
13.23	10.99	1.50	0.0	0.70	0.0	0.00	0.00	0.35	1.00	1.00	-0.35	0.35	-0.35	0.35	30.99	-110.17	1113.4	215.1	234.2
13.13	10.99	1.49	0.0	0.70	0.0	0.00	0.00	0.35	1.00	1.00	-0.35	0.35	-0.35	0.35	31.07	-110.55	1113.0	215.5	234.2
13.03	10.99	1.49	0.0	0.70	0.0	0.00	0.00	0.35	1.00	1.00	-0.35	0.35	-0.35	0.35	31.16	-110.94	1112.6	216.0	234.2
12.93	10.99	1.49	0.0	0.70	0.0	0.00	0.00	0.35	1.00	1.00	-0.35	0.35	-0.35	0.35	31.24	-111.32	1112.3	216.5	234.2
12.83	10.99	1.48	0.0	0.70	0.0	0.00	0.00	0.35	1.00	1.00	-0.35	0.35	-0.35	0.35	31.33	-111.71	1111.9	217.0	234.2
12.73	10.99	1.48	0.0	0.70	0.0	0.00	0.00	0.35	1.00	1.00	-0.35	0.35	-0.35	0.35	31.41	-112.10	1111.5	217.4	234.2
12.63	10.99	1.47	0.0	0.70	0.0	0.00	0.00	0.35	1.00	1.00	-0.35	0.35	-0.35	0.35	31.49	-112.48	1111.1	217.9	234.2
12.53	10.99	1.47	0.0	0.70	0.0	0.00	0.00	0.35	1.00	1.00	-0.35	0.35	-0.35	0.35	31.58	-112.87	1110.7	218.4	234.2
12.42	10.99	1.46	0.0	0.70	0.0	0.00	0.00	0.35	1.00	1.00	-0.35	0.35	-0.35	0.35	31.66	-113.25	1110.3	218.8	234.2
12.32	10.99	1.46	0.0	0.70	0.0	0.00	0.00	0.35	1.00	1.00	-0.35	0.35	-0.35	0.35	31.75	-113.64	1109.9	219.3	234.2
12.22	10.99	1.45	0.0	0.70	0.0	0.00	0.00	0.35	1.00	1.00	-0.35	0.35	-0.35	0.35	31.83	-114.02	1109.6	219.8	234.2
12.12	10.99	1.45	0.0	0.70	0.0	0.00	0.00	0.35	1.00	1.00	-0.35	0.35	-0.35	0.35	31.92	-114.41	1109.2	220.2	234.2
12.02	10.99	1.44	0.0	0.70	0.0	0.00	0.00	0.35	1.00	1.00	-0.35	0.35	-0.35	0.35	32.00	-114.79	1108.8	220.7	234.2
11.92	10.99	1.43	0.0	0.70	0.0	0.00	0.00	0.35	1.00	1.00	-0.35	0.35	-0.35	0.35	32.15	-115.18	1108.4	221.2	234.2
11.82	10.99	1.42	0.0	0.70	0.0	0.00	0.00	0.35	1.00	1.00	-0.35	0.35	-0.35	0.35	32.29	-115.57	1108.0	221.8	234.2
11.72	10.99	1.41	0.0	0.70	0.0	0.00	0.00	0.35	1.00	1.00	-0.35	0.35	-0.35	0.35	32.43	-115.95	1107.6	222.3	234.2
11.62	10.99	1.40	0.0	0.70	0.0	0.00	0.00	0.35	1.00	1.00	-0.35	0.35	-0.35	0.35	32.58	-116.34	1107.2	222.8	234.2
11.52	10.99	1.39	0.0	0.70	0.0	0.00	0.00	0.35	1.00	1.00	-0.35	0.35	-0.35	0.35	32.72	-116.72	1106.9	223.4	234.2
11.42	10.99	1.38	0.0	0.70	0.0	0.00	0.00	0.35	1.00	1.00	-0.35	0.35	-0.35	0.35	32.87	-117.11	1106.5	223.9	234.2
11.32	10.99	1.37	0.0	0.70	0.0	0.00	0.00	0.35	1.00	1.00	-0.35	0.35	-0.35	0.35	33.01	-117.49	1106.1	224.4	234.2
11.22	10.99	1.35	0.0	0.70	0.0	0.00	0.00	0.35	1.00	1.00	-0.35	0.35	-0.35	0.35	33.16	-117.88	1105.7	225.0	234.2
11.12	10.99	1.34	0.0	0.70	0.0	0.00	0.00	0.35	1.00	1.00	-0.35	0.35	-0.35	0.35	33.30	-118.26	1105.3	225.5	234.2
11.02	10.99	1.33	0.0	0.70	0.0	0.00	0.00	0.35	1.00	1.00	-0.35	0.35	-0.35	0.35	33.45	-118.65	1104.9	226.0	234.2
10.92	10.99	1.32	0.0	0.70	0.0	0.00	0.00	0.35	1.00	1.00	-0.35	0.35	-0.35	0.35	33.59	-119.03	1104.5	226.5	234.2
10.82	10.99	1.31	0.0	0.70	0.0	0.00	0.00	0.35	1.00	1.00	-0.35	0.35	-0.35	0.35	33.74	-119.42	1104.2	227.1	234.2
10.72	10.99	1.30	0.0	0.70	0.0	0.00	0.00	0.35	1.00	1.00	-0.35	0.35	-0.35	0.35	33.88	-119.81	1103.8	227.6	234.2
10.62	10.99	1.29	0.0	0.70	0.0	0.00	0.00	0.35	1.00	1.00	-0.35	0.35	-0.35	0.35	34.02	-120.19	1103.4	228.1	234.2
10.52	10.99	1.28	0.0	0.70	0.0	0.00	0.00	0.35	1.00	1.00	-0.35	0.35	-0.35	0.35	34.17	-120.58	1103.0	228.7	234.2
10.42	10.99	1.27	0.0	0.70	0.0	0.00	0.00	0.35	1.00	1.00	-0.35	0.35	-0.35	0.35	34.31	-120.96	1102.6	229.2	234.2
10.32	10.99	1.26	0.0	0.70	0.0	0.00	0.00	0.35	1.00	1.00	-0.35	0.35	-0.35	0.35	34.46	-121.35	1102.2	229.7	234.2
10.22	10.99	1.25	0.0	0.70	0.0	0.00	0.00	0.35	1.00	1.00	-0.35	0.35	-0.35	0.35	34.60	-121.73	1101.8	230.3	234.2
10.12	10.99	1.24	0.0	0.70	0.0	0.00	0.00	0.35	1.00	1.00	-0.35	0.35	-0.35	0.35	34.75	-122.12	1101.5	230.8	234.2
10.02	10.99	1.22	0.0	0.70	0.0	0.00	0.00	0.35	1.00	1.00	-0.35	0.35	-0.35	0.35	34.89	-122.50	1101.1	231.3	234.2
9.92	10.99	1.21	0.0	0.70	0.0	0.00	0.00	0.35	1.00	1.00	-0.35	0.35	-0.35	0.35	35.04	-122.89	1100.7	231.8	234.2
9.82	10.99	1.20	0.0	0.70	0.0	0.00	0.00	0.35	1.00	1.00	-0.35	0.35	-0.35	0.35	35.18	-123.27	1100.3	232.4	234.2
9.72	10.99	1.19	0.0	0.70	0.0	0.00	0.00	0.35	1.00	1.00	-0.35	0.35	-0.35	0.35	35.33	-123.66	1099.9	232.9	234.2
9.62	10.99	1.18	0.0	0.70	0.0	0.00	0.00	0.35	1.00	1.00	-0.35	0.35	-0.35	0.35	35.47	-124.05	1099.5	233.4	234.2
9.52	10.99	1.17	0.0	0.70	0.0	0.00	0.00	0.35	1.00	1.00	-0.35	0.35	-0.35	0.35	35.62	-124.43	1099.1	234.0	234.2
9.42	10.99	1.16	0.0	0.70	0.0	0.00	0.00	0.35	1.00	1.00	-0.35	0.35	-0.35	0.35	35.76	-124.82	1098.8	234.5	234.2
9.32	10.99	1.15	0.0	0.70	0.0	0.00	0.00	0.35	1.00	1.00	-0.35	0.35	-0.35	0.35	35.90	-125.20	1098.4	235.0	234.2
9.22	10.99	1.14	0.0	0.70	0.0	0.00	0.00	0.35	1.00	1.00	-0.35	0.35	-0.35	0.35	36.05	-125.59	1098.0	235.6	234.2
9.12	10.99	1.13	0.0	0.70	0.0	0.00	0.00	0.35	1.00	1.00	-0.35	0.35	-0.35	0.35	36.19	-125.97	1097.6	236.1	234.2
9.02	10.99	1.12	0.0	0.70	0.0	0.00	0.00	0.35	1.00	1.00	-0.35	0.35	-0.35	0.35	36.34	-126.36	1097.2	236.6	234.2
8.92	10.99	1.11	0.0	0.70	0.0	0.00	0.00	0.35	1.00	1.00	-0.35	0.35	-0.35	0.35	36.48	-126.74	1096.8	237.2	234.2
8.82	10.99	1.10	0.0	0.70	0.0	0.00	0.00	0.35	1.00	1.00	-0.35	0.35	-0.35	0.35	36.63	-127.13	1096.4	237.7	234.2
8.72	10.99	1.08	0.0	0.70	0.0	0.00	0.00	0.35	1.00	1.00	-0.35	0.35	-0.35	0.35	36.77	-127.52	1096.1	238.2	234.2
8.62	10.99	1.07	0.0	0.70	0.0	0.00	0.00	0.35	1.00	1.00	-0.35	0.35	-0.35	0.35	36.92	-127.90	1095.7	238.7	234.2
8.52	10.99	1.06	0.0	0.70	0.0	0.00	0.00	0.35	1.00	1.00	-0.35	0.35	-0.35	0.35	37.06	-128.29	1095.3	239.3	234.2
8.42	10.99	1.05	28.0	0.70	19.6	-0.26	0.15	0.25	1.00	1.00	-0.25	0.25	-0.51	0.40	37.21	-128.85	1094.7	239.9	234.0
8.32	10.99	1.04	28.0	0.70	19.6	-0.26	0.15	0.25	1.00	1.00	-0.25	0.25	-0.51	0.40	37.35	-129.41	1094.2	240.4	233.9
8.22	10.99	1.02	28.0	0.70	19.6	-0.26	0.15	0.25	1.00	1.00	-0.25	0.25	-0.51	0.40	37.50	-129.97	1093.6	241.0	233.8
8.12	10.99	1.01	28.0	0.70	19.6	-0.25	0.14	0.25	1.00	1.00	-0.25	0.25	-0.50	0.39	37.64	-130.52	1093.1	241.6	233.7
8.02	10.99	1.00	28.0	0.70	19.6	-0.25	0.14	0.25	1.00	1.00	-0.25	0.25	-0.50	0.39	37.78	-131.07	1092.5	242.2	233.6
7.92	10.99	0.99	28.0	0.70	19.6	-0.25	0.14	0.25	1.00	1.00	-0.25	0.25	-0.50	0.39	37.93	-131.62	1092.0	242.7	233.5
7.82	10.99	0.97	28.0	0.70	19.6	-0.24	0.14	0.25	1.00	1.00	-0.25	0.25	-0.49	0.39	38.07	-132.16	1091.4	243.3	233.4
7.72	10.99	0.96	28.0	0.70	19.6	-0.24	0.14	0.25	1.00	1.00	-0.25	0.25	-0.49	0.39	38.22	-132.70	1090.9	243.9	233.3
7.62	10.99	0.95	28.0	0.70	19.6	-0.24	0.14	0.25	1.00	1.00	-0.25	0.25	-0.49	0.39	38.36	-133.23	1090.3	244.5	233.2
7.52	10.99	0.94	28.0	0.70	19.6	-0.23	0.13	0.25	1.00	1.00	-0.25	0.25	-0.48	0.38	38.51	-133.76	1089.8	245.0	233.1
7.41	10.99	0.92	28.0	0.70	19.6	-0.23	0.13	0.25	1.00	1.00	-0.25	0.25	-0.48	0.38	38.65	-134.29	1089.3	245.6	233.0
7.31	10.99	0.91	28.0	0.70	19.6	-0.23	0.13	0.25	1.00	1.00	-0.25	0.25	-0.48	0.38	38.80	-134.82	1088.8	246.2	232.9
7.21	10.99	0.90	28.0	0.70	19.6	-0.22	0.13	0.25	1.00	1.00	-0.25	0.25	-0.47	0.38	38.94	-135.34	1088.2	246.7	232.9
7.11	10.99	0.88	28.0	0.70	19.6	-0.22	0.13	0.25	1.00	1.00	-0.25	0.25	-0.47	0.38	39.09	-135.86	1087.7	247.3	232.8
7.01	10.99	0.87	28.0	0.70	19.6	-0.22	0.12	0.25	1.00	1.00	-0.25	0.25	-0.47	0.37	39.23	-136.37	1087.2	247.8	232.7
6.91	10.99	0.86	28.0	0.70	19.6	-0.21	0.12	0.25	1.00	1.00	-0.25	0.25	-0.46	0.37	39.37	-136.88	1086.7	248.4	232.6
6.81	10.99	0.85	28.0	0.70	19.6	-0.21	0.12	0.25	1.00	1.00	-0.25	0.25	-0.46	0.37	39.52	-137.39	1086.2	248.9	232.5
6.71	10.99	0.83	28.0	0.70	19.6	-0.21	0.12	0.25	1.00	1.00	-0.25	0.25	-0.46	0.37	39.66	-137.90	1085.7	249.5	232.4
6.61	10.99	0.82	28.0	0.70	19.6	-0.20	0.12	0.25	1.00	1.00	-0.25	0.25	-0.45	0.37	39.81	-138.40	1085.2	250.0	232.3
6.51	10.99	0.81	28.0	0.70	19.6	-0.20	0.12	0.25	1.00	1.00	-0.25	0.25	-0.45	0.37	39.95	-138.89	1084.7	250.6	232.2
6.41	10.99	0.80	28.0	0.70	19.6	-0.20	0.11	0.25	1.00	1.00	-0.25	0.25	-0.45	0.36	40.10	-139.39	1084.2	251.1	232.2
6.31	10.99	0.78	28.0	0.70	19.6	-0.20	0.11	0.25	1.00	1.00	-0.25	0.25	-0.45	0.36	40.24	-139.88	1083.7	251.7	232.1
6.21	10.99	0.77	28.0	0.70	19.6	-0.19	0.11	0.25	1.00	1.00	-0.25	0.25	-0.44	0.36	40.39	-140.36	1083.2	252.2	232.0
6.11	10.99	0.76	28.0	0.70	19.6	-0.19	0.11	0.25	1.00	1.00	-0.25	0.25	-0.44	0.36	40.53	-140.85	1082.7	252.8	231.9
6.01	10.99	0.74	28.0	0.70	19.6	-0.19	0.11	0.25	1.00	1.00	-0.25	0.25	-0.44	0.36	40.68	-141.33	1082.2	253.3	231.8
5.91	10.99	0.73	28.0	0.70	19.6	-0.18	0.10	0.25	1.00	1.00	-0.25	0.25	-0.43	0.35	40.82	-141.80	1081.8	253.8	231.8
5.81	10.99	0.72	28.0	0.70	19.6	-0.18	0.10	0.25	1.00	1.00	-0.25	0.25	-0.43	0.35	40.97	-142.28	1081.3	254.4	231.7
5.71	10.99	0.71	28.0	0.70	19.6	-0.18	0.10	0.25	1.00	1.00	-0.25	0.25	-0.43	0.35	41.11	-142.75	1080.8	254.9	231.6
5.61	10.99	0.69	28.0	0.70	19.6	-0.17	0.10	0.25	1.00	1.00	-0.25	0.25	-0.42	0.35	41.25	-143.21	1080.4	255.4	231.6
5.51	10.99	0.68	28.0	0.70	19.6	-0.17	0.10	0.25	1.00	1.00	-0.25	0.25	-0.42	0.35	41.40	-143.67	1079.9	255.9	231.5
5.41	10.99	0.67	28.0	0.70	19.6	-0.17	0.10	0.25	1.00	1.00	-0.25	0.25	-0.42	0.35	41.54	-144.13	1079.4	256.5	231.4
5.31	10.99	0.66	28.0	0.70	19.6	-0.16	0.09	0.25	1.00	1.00	-0.25	0.25	-0.41	0.34	41.69	-144.59	1079.0	257.0	231.3
5.21	10.99	0.64	28.0	0.70	19.6	-0.16	0.09	0.25	1.00	1.00	-0.25	0.25	-0.41	0.34	41.83	-145.04	1078.5	257.5	231.3
5.11	10.99	0.63	28.0	0.70	19.6	-0.16	0.09	0.25	1.00	1.00	-0.25	0.25	-0.41	0.34	41.98	-145.49	1078.1	258.0	231.2
5.01	10.99	0.62	28.0	0.70	19.6	-0.15	0.09	0.25	1.00	1.00	-0.25	0.25	-0.40	0.34	42.12	-145.93	1077.6	258.5	231.2
4.91	10.99	0.60	28.0	0.70	19.6	-0.15	0.09	0.25	1.00	1.00	-0.25	0.25	-0.40	0.34	42.27	-146.38	1077.2	259.1	231.1
4.81	10.99	0.59	28.0	0.70	19.6	-0.15	0.08	0.25	1.00	1.00	-0.25	0.25	-0.40	0.33	42.41	-146.81	1076.8	259.6	231.0
4.71	10.99	0.58	28.0	0.70	19.6	-0.14	0.08	0.25	1.00	1.00	-0.25	0.25	-0.39	0.33	42.56	-147.25	1076.3	260.1	231.0
4.61	10.99	0.57	28.0	0.70	19.6	-0.14	0.08	0.25	1.00	1.00	-0.25	0.25	-0.39	0.33	42.70	-147.68	1075.9	260.6	230.9
4.51	10.99	0.55	28.0	0.70	19.6	-0.14	0.08	0.25	1.00	1.00	-0.25	0.25	-0.39	0.33	42.84	-148.11	1075.5	261.1	230.9
4.41	10.99	0.54	28.0	0.70	19.6	-0.13	0.08	0.25	1.00	1.00	-0.25	0.25	-0.38	0.33	42.99	-148.53	1075.0	261.6	230.8
4.31	10.99	0.53	28.0	0.70	19.6	-0.13	0.08	0.25	1.00	1.00	-0.25	0.25	-0.38	0.33	43.13	-148.95	1074.6	262.1	230.7

4.21	10.99	0.52	28.0	0.70	19.6	-0.13	0.07	0.25	1.00	1.00	-0.25	0.25	-0.38	0.32	43.28	-149.37	1074.2	262.6	230.7
4.11	10.99	0.50	28.0	0.70	19.6	-0.13	0.07	0.25	1.00	1.00	-0.25	0.25	-0.38	0.32	43.42	-149.78	1073.8	263.1	230.6
4.01	10.99	0.49	28.0	0.70	19.6	-0.12	0.07	0.25	1.00	1.00	-0.25	0.25	-0.37	0.32	43.57	-150.19	1073.4	263.6	230.6
3.91	10.99	0.48	28.0	0.70	19.6	-0.12	0.07	0.25	1.00	1.00	-0.25	0.25	-0.37	0.32	43.71	-150.60	1073.0	264.1	230.5
3.81	10.99	0.46	28.0	0.70	19.6	-0.12	0.07	0.25	1.00	1.00	-0.25	0.25	-0.37	0.32	43.86	-151.00	1072.6	264.6	230.5
3.71	10.99	0.45	28.0	0.70	19.6	-0.11	0.06	0.25	1.00	1.00	-0.25	0.25	-0.36	0.31	44.00	-151.40	1072.2	265.1	230.4
3.61	10.99	0.44	28.0	0.70	19.6	-0.11	0.06	0.25	1.00	1.00	-0.25	0.25	-0.36	0.31	44.15	-151.80	1071.8	265.6	230.4
3.51	10.99	0.43	28.0	0.70	19.6	-0.11	0.06	0.25	1.00	1.00	-0.25	0.25	-0.36	0.31	44.29	-152.19	1071.4	266.1	230.4
3.41	10.99	0.41	0.0	0.70	0.0	0.00	0.00	0.50	1.00	1.00	0.00	0.00	0.00	0.00	44.44	-152.19	1071.4	266.2	230.4
3.31	10.99	0.40	0.0	0.70	0.0	0.00	0.00	0.50	1.00	1.00	0.00	0.00	0.00	0.00	44.58	-152.19	1071.4	266.3	230.4
3.21	10.99	0.39	0.0	0.70	0.0	0.00	0.00	0.50	1.00	1.00	0.00	0.00	0.00	0.00	44.72	-152.19	1071.4	266.5	230.4
3.11	10.99	0.38	0.0	0.70	0.0	0.00	0.00	0.50	1.00	1.00	0.00	0.00	0.00	0.00	44.87	-152.19	1071.4	266.6	230.4
3.01	10.99	0.37	0.0	0.70	0.0	0.00	0.00	0.50	1.00	1.00	0.00	0.00	0.00	0.00	45.01	-152.19	1071.4	266.8	230.4
2.91	10.99	0.35	0.0	0.70	0.0	0.00	0.00	0.50	1.00	1.00	0.00	0.00	0.00	0.00	45.16	-152.19	1071.4	266.9	230.4
2.81	10.99	0.34	0.0	0.70	0.0	0.00	0.00	0.50	1.00	1.00	0.00	0.00	0.00	0.00	45.30	-152.19	1071.4	267.1	230.4
2.71	10.99	0.33	0.0	0.70	0.0	0.00	0.00	0.50	1.00	1.00	0.00	0.00	0.00	0.00	45.45	-152.19	1071.4	267.2	230.4
2.61	10.99	0.32	0.0	0.70	0.0	0.00	0.00	0.50	1.00	1.00	0.00	0.00	0.00	0.00	45.59	-152.19	1071.4	267.4	230.4
2.51	10.99	0.31	0.0	0.70	0.0	0.00	0.00	0.50	1.00	1.00	0.00	0.00	0.00	0.00	45.74	-152.19	1071.4	267.5	230.4
2.40	10.99	0.29	0.0	0.70	0.0	0.00	0.00	0.50	1.00	1.00	0.00	0.00	0.00	0.00	45.88	-152.19	1071.4	267.6	230.4
2.30	10.99	0.28	0.0	0.70	0.0	0.00	0.00	0.50	1.00	1.00	0.00	0.00	0.00	0.00	46.03	-152.19	1071.4	267.8	230.4
2.20	10.99	0.27	0.0	0.70	0.0	0.00	0.00	0.50	1.00	1.00	0.00	0.00	0.00	0.00	46.17	-152.19	1071.4	267.9	230.4
2.10	10.99	0.26	0.0	0.70	0.0	0.00	0.00	0.50	1.00	1.00	0.00	0.00	0.00	0.00	46.31	-152.19	1071.4	268.1	230.4
2.00	10.99	0.25	0.0	0.70	0.0	0.00	0.00	0.50	1.00	1.00	0.00	0.00	0.00	0.00	46.46	-152.19	1071.4	268.2	230.4
1.90	10.99	0.23	0.0	0.70	0.0	0.00	0.00	0.50	1.00	1.00	0.00	0.00	0.00	0.00	46.60	-152.19	1071.4	268.4	230.4
1.80	10.99	0.22	0.0	0.70	0.0	0.00	0.00	0.50	1.00	1.00	0.00	0.00	0.00	0.00	46.75	-152.19	1071.4	268.5	230.4
1.70	10.99	0.21	0.0	0.70	0.0	0.00	0.00	0.50	1.00	1.00	0.00	0.00	0.00	0.00	46.89	-152.19	1071.4	268.7	230.4
1.60	10.99	0.20	0.0	0.70	0.0	0.00	0.00	0.50	1.00	1.00	0.00	0.00	0.00	0.00	47.04	-152.19	1071.4	268.8	230.4
1.50	10.99	0.19	0.0	0.70	0.0	0.00	0.00	0.50	1.00	1.00	0.00	0.00	0.00	0.00	47.18	-152.19	1071.4	269.0	230.4
1.40	10.99	0.17	0.0	0.70	0.0	0.00	0.00	0.50	1.00	1.00	0.00	0.00	0.00	0.00	47.33	-152.19	1071.4	269.1	230.4
1.30	10.99	0.16	0.0	0.70	0.0	0.00	0.00	0.50	1.00	1.00	0.00	0.00	0.00	0.00	47.47	-152.19	1071.4	269.2	230.4
1.20	10.99	0.15	0.0	0.70	0.0	0.00	0.00	0.50	1.00	1.00	0.00	0.00	0.00	0.00	47.62	-152.19	1071.4	269.4	230.4
1.10	10.99	0.14	0.0	0.70	0.0	0.00	0.00	0.50	1.00	1.00	0.00	0.00	0.00	0.00	47.76	-152.19	1071.4	269.5	230.4
1.00	10.99	0.13	0.0	0.70	0.0	0.00	0.00	0.50	1.00	1.00	0.00	0.00	0.00	0.00	47.91	-152.19	1071.4	269.7	230.4
0.90	10.99	0.11	0.0	0.70	0.0	0.00	0.00	0.50	1.00	1.00	0.00	0.00	0.00	0.00	48.05	-152.19	1071.4	269.8	230.4
0.80	10.99	0.10	0.0	0.70	0.0	0.00	0.00	0.50	1.00	1.00	0.00	0.00	0.00	0.00	48.19	-152.19	1071.4	270.0	230.4
0.70	10.99	0.09	0.0	0.70	0.0	0.00	0.00	0.50	1.00	1.00	0.00	0.00	0.00	0.00	48.34	-152.19	1071.4	270.1	230.4
0.60	10.99	0.08	0.0	0.70	0.0	0.00	0.00	0.50	1.00	1.00	0.00	0.00	0.00	0.00	48.48	-152.19	1071.4	270.3	230.4
0.50	10.99	0.07	0.0	0.70	0.0	0.00	0.00	0.50	1.00	1.00	0.00	0.00	0.00	0.00	48.63	-152.19	1071.4	270.4	230.4
0.40	10.99	0.05	0.0	0.70	0.0	0.00	0.00	0.50	1.00	1.00	0.00	0.00	0.00	0.00	48.77	-152.19	1071.4	270.5	230.4
0.30	10.99	0.04	0.0	0.70	0.0	0.00	0.00	0.50	1.00	1.00	0.00	0.00	0.00	0.00	48.92	-152.19	1071.4	270.7	230.4
0.20	10.99	0.03	0.0	0.70	0.0	0.00	0.00	0.50	1.00	1.00	0.00	0.00	0.00	0.00	49.06	-152.19	1071.4	270.8	230.4
0.10	10.99	0.02	0.0	0.70	0.0	0.00	0.00	0.50	1.00	1.00	0.00	0.00	0.00	0.00	49.21	-152.19	1071.4	271.0	230.4
0.00	10.99	0.01	0.0	0.70	0.0	0.00	0.00	0.50	1.00	1.00	0.00	0.00	0.00	0.00	49.35	-152.19	1071.4	271.1	230.4

SETTLEMENT based on Ultimate Loading by Vesic Method (1977):
Ztip=50.00 Btip= 3.50 Cp= 0.135 Cs= 0.207
Xpp=4.453-in Xps= 0.019-in Xtip= 4.472-in
Cp & Cs are average value at bearing stratum from pile tip extend to 4 Btip

At loading: Qtip=1029.8-kp Qtop= 1071.4-kp Qside= 41.6-kp
Xtip=4.472-in Xtop= 4.636-in Xshaft= 0.163-in

LOAD - TOTAL SETTLEMENT RELATION (from t-z, and q-w curves):
Based on Vesic Method (1977)

Xtop -in	Xshaft -in	Xtip -in	Qtip -kp	Qside -kp	Qtotal -kp
0.0002	0.0002	0.0000	1.4	0.7	2.0
0.0278	0.0031	0.0247	16.2	11.0	27.2
0.0552	0.0059	0.0493	31.0	19.3	50.3
0.0825	0.0085	0.0740	45.9	25.8	71.7
0.1096	0.0110	0.0986	60.8	30.8	91.5
0.1367	0.0134	0.1233	75.6	34.6	110.2
0.1637	0.0157	0.1479	90.4	37.3	127.7
0.1906	0.0180	0.1726	105.2	39.2	144.4
0.2175	0.0202	0.1973	120.0	40.5	160.4
0.2443	0.0224	0.2219	134.7	41.2	175.9
0.2711	0.0246	0.2466	149.3	41.5	190.8
0.2979	0.0267	0.2712	163.9	41.6	205.4
0.3246	0.0287	0.2959	178.3	41.4	219.8
0.3513	0.0308	0.3206	192.7	41.2	233.9
0.3780	0.0328	0.3452	207.0	40.9	247.8
0.4047	0.0348	0.3699	221.1	40.5	261.6
0.4314	0.0368	0.3945	235.2	40.1	275.3
0.4580	0.0388	0.4192	249.1	39.8	288.9
0.4847	0.0408	0.4438	262.9	39.5	302.4
0.5113	0.0428	0.4685	276.6	39.3	315.9
0.5379	0.0447	0.4932	290.1	39.1	329.2
0.5644	0.0466	0.5178	303.5	38.9	342.4
0.5910	0.0485	0.5425	316.8	38.7	355.5
0.6175	0.0504	0.5671	329.9	38.6	368.4
0.6441	0.0523	0.5918	342.8	38.4	381.2
0.6705	0.0541	0.6164	355.6	38.2	393.8
0.6970	0.0559	0.6411	368.2	38.0	406.2
0.7234	0.0577	0.6658	380.7	37.7	418.4
0.7498	0.0594	0.6904	393.0	37.3	430.3
0.7762	0.0611	0.7151	405.1	36.9	442.0
0.8026	0.0628	0.7397	417.1	36.4	453.4
0.8289	0.0645	0.7644	428.9	35.8	464.6
0.8552	0.0661	0.7891	440.5	35.2	475.6
0.8814	0.0677	0.8137	451.9	34.5	486.4
0.9077	0.0693	0.8384	463.2	33.9	497.0
0.9339	0.0709	0.8630	474.3	33.2	507.5
0.9601	0.0724	0.8877	485.2	32.7	517.9
0.9863	0.0739	0.9123	495.9	32.3	528.2
1.0125	0.0755	0.9370	506.5	32.7	539.2
1.0386	0.0770	0.9617	516.9	32.7	549.5
1.0648	0.0784	0.9863	527.1	32.7	559.7
1.0909	0.0799	1.0110	537.1	32.7	569.8
1.1170	0.0813	1.0356	547.0	32.7	579.7
1.1430	0.0827	1.0603	556.7	32.7	589.4
1.1691	0.0841	1.0849	566.2	32.8	599.0
1.1951	0.0855	1.1096	575.5	32.9	608.4
1.2211	0.0868	1.1343	584.7	33.0	617.7
1.2470	0.0881	1.1589	593.8	33.1	626.9
1.2730	0.0894	1.1836	602.6	33.3	635.9
1.2989	0.0907	1.2082	611.3	33.4	644.7
1.3248	0.0919	1.2329	619.8	33.6	653.4
1.3507	0.0931	1.2576	628.2	33.8	662.0
1.3765	0.0943	1.2822	636.4	33.9	670.4
1.4024	0.0955	1.3069	644.5	34.1	678.6
1.4282	0.0967	1.3315	652.4	34.3	686.7
1.4540	0.0978	1.3562	660.2	34.5	694.7
1.4798	0.0989	1.3808	667.8	34.7	702.5
1.5055	0.1000	1.4055	675.3	34.8	710.1
1.5312	0.1011	1.4302	682.6	35.0	717.6
1.5569	0.1021	1.4548	689.8	35.1	724.9

1.5826	0.1031	1.4795	696.9	35.2	732.1
1.6083	0.1042	1.5041	703.8	35.3	739.1
1.6339	0.1051	1.5288	710.6	35.4	746.0
1.6596	0.1061	1.5534	717.3	35.5	752.8
1.6852	0.1071	1.5781	723.8	35.5	759.3
1.7108	0.1080	1.6028	730.2	35.5	765.8
1.7363	0.1089	1.6274	736.6	35.6	772.1
1.7619	0.1098	1.6521	742.7	35.6	778.3
1.7874	0.1107	1.6767	748.8	35.6	784.4
1.8129	0.1115	1.7014	754.8	35.6	790.4
1.8384	0.1124	1.7261	760.7	35.6	796.3
1.8639	0.1132	1.7507	766.4	35.7	802.1
1.8894	0.1140	1.7754	772.1	35.9	808.0
1.9149	0.1149	1.8000	777.6	36.1	813.8
1.9404	0.1157	1.8247	783.1	36.4	819.6
1.9658	0.1165	1.8493	788.5	36.9	825.4
1.9912	0.1172	1.8740	793.8	36.4	830.2
2.0166	0.1180	1.8987	799.0	36.3	835.3
2.0420	0.1187	1.9233	804.1	36.3	840.4
2.0674	0.1194	1.9480	809.1	36.3	845.4
2.0928	0.1201	1.9726	814.1	36.3	850.3
2.1181	0.1208	1.9973	819.0	36.2	855.2
2.1435	0.1215	2.0220	823.8	36.2	860.0
2.1688	0.1222	2.0466	828.5	36.2	864.7
2.1942	0.1229	2.0713	833.2	36.1	869.3
2.2195	0.1235	2.0959	837.8	36.1	873.8
2.2448	0.1242	2.1206	842.3	36.1	878.3
2.2701	0.1248	2.1452	846.8	36.0	882.8
2.2954	0.1255	2.1699	851.2	36.0	887.2
2.3207	0.1261	2.1946	855.5	36.0	891.5
2.3459	0.1267	2.2192	859.8	35.9	895.7
2.3712	0.1273	2.2439	864.0	35.9	899.9
2.3965	0.1279	2.2685	868.2	35.9	904.1
2.4217	0.1285	2.2932	872.3	35.8	908.2
2.4470	0.1291	2.3178	876.4	35.8	912.2
2.9204	0.1390	2.7814	945.1	35.2	980.3
3.3917	0.1467	3.2450	998.7	34.6	1033.3
3.8597	0.1511	3.7086	1029.8	34.0	1063.8
4.3226	0.1505	4.1721	1025.5	33.4	1058.9
4.7794	0.1437	4.6357	979.3	32.8	1012.1

At Qwork= 266.00-kp Settlement= 0.41323-in
At Qwork= 266.00-kp Secant Stiffness Kqx= 643.71-kp/-in
At Xallow= 1.00-in Q= 533.96-kp
Note: If the program cannot find a result or the result exceeds the upper limit. The result will be displayed as 99999.

SUMMARY:

Total Ultimate Capacity (Down)= 1071.389-kp Total Ultimate Capacity (Up)= 271.120-kp
Total Allowable Capacity (Down)= 364.061-kp Total Allowable Capacity (Up)= 160.236-kp

Weight above Ground= 0.00 Total Pile Weight= 49.35-kp *Soil Weight is not included
Side Resistance (Down)= 41.589-kp Side Resistance (Up)= 221.768-kp
Tip Resistance (Down)= 1029.800-kp Tip Resistance (Up)= 0.000-kp
Negative Friction, Qneg= -152.188-kp, which has been subtracted from Total Ultimate Capacity (Down)
Negative friction does not affect Total Uplift Ultimate Capacity (Up)

OK! Qallow > Q * Vertical Load, Q= 266.0 -kp

FACTOR OF SAFETY:

FSside	FStip	FSup	FSweight
2.0	3.0	2.0	1.0

* FStorsion = FSside

Notes:
* Settlement in the program is Elastic Settlement only. Consolidation Settlement is not calculated!
Length - Pile length, distance from pile top to tip (not from ground surface)
Width or D - Width of pile shaft (pile diameter)
Ds and Dl - Short Side and Long Side of Footing
Area - Section area of pile shaft or tip area of pile
Sv - Vertical stress in soils (It may be limited based on critical depth, Z_lim or Z/D
qult - Ultimate tip resistance (pressure)
Qtip_dw - Ultimate downward tip resistance (Force or Capacity)
Qtip_up - Ultimate uplift tip resistance for belled pile or uplift plate (Force or Capacity)
Torsion - Ultimate torsion resistance for single pile (Capacity)
dz - Small Segment of Depth for Calculation
Zs - Soil Depth, Depth from ground surface
Zp - Pile Depth, Depth from pile top
Prem - Primer of pile shaft
Phi - Soil internal friction angle (between soils)
Kf - Friction factor to convert Phi to Delta
Delta - Ski friction between soil and pile (function of Phi. It is different from Phi)
f_dw - Downward Resistance between soil and pile from Delta
f_up - Uplift Resistance between soil and pile from Delta
C - Soil cohesion (between soils)
Ca - Adhesion between soil and pile (function of C. It is different from C) Ca=KaKcC
Ka - Adhesion ratio, C/Ca
Kc - Adhesion factor defended by users
Ca_dw - Downward adhesion between pile and soil
Ca_up - Uplift adhesion between pile and soil
Sf_dw - Downward side resistance (sum of friction and adhesion, f_dw + Ca_dw)
Sf_up - Uplift side resistance (sum of friction and adhesion, f_up + Ca_up)
Torsion side resistance = (Sf_dw+Sf_up)/2 * pile diameter/2
Weight - Weight of Pile shaft
Qneg - negative friction Resistance
Qside - Ultimate side resistance (Qside_dw or Qside_up)
Qtip - Ultimate tip resistance (Qtip_dw or Qtip_up for uplift plate)
Q_dw - Ultimate downward capacity (Qtip + Qside_dw)
Q_up - Ultimate uplift capacity (Weight + Qside_up)
E - Elastic modules
Xs - Settlement due to axial deformation of pile shaft
Xpp - Settlement due to point load from pile tip
Xps- Settlement due to load from pile shaft
Xtop - Total settlement, Xs + Xpp + Xps
Xtip - Tip settlement, Xpp + Xps
Xshaft - Shaft deformation, Xs
Xallow - Allowable settlement specified by users
Qwork - Vertical working load applied to pile
Qallow - Vertical allowable load, Qult/F.S.

VERTICAL ANALYSIS

Figure 1

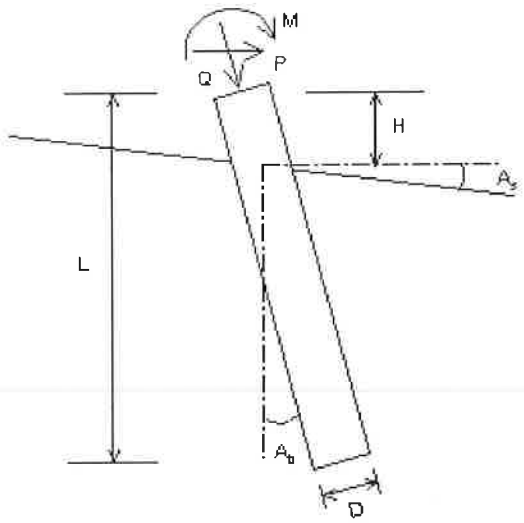

Drilled Shaft (dia >24 in. or 61 cm)

Loads:
Load Factor for Vertical Loads= 1.0
Load Factor for Lateral Loads= 1.0
Loads Supported by Pile Cap= 0 %
Shear Condition: Static

(with Load Factor)
Vertical Load, Q= 378.0 -kp

Profile:
Pile Length, L= 50.0 -ft
Top Height, H= 0 -ft
Slope Angle, As= 0
Batter Angle, Ab= 0

* Zero Friction *
Zero Friction Start: 0 -ft End: 4.5 -ft
* Negative Friction *
Negative Friction Start: 4.5 -ft End: 12 -ft with Factor: 1
Negative Friction Start: 22 -ft End: 24.5 -ft with Factor: 1

Soil Data:

Depth -ft	Gamma -lb/f3	Phi	C -kp/f2	K -lb/i3	e50 or Dr %	Nspt
0	120.0	0.0	0.500	272.0	0.92	9
3.5	108.0	0.0	0.750	276.5	0.92	9
12	120.0	34	0.00	90.6	49.45	17
13	58.7	34	0.00	64.1	52.46	19
22	70.6	0.0	1.500	921.9	0.54	22
24.5	71.1	30	1.000	1031.5	0.51	24
42	74.5	37	0.00	197.2	95.94	60

Pile Data:

Depth -ft	Width -in	Area -in2	Per. -in	I -in4	E -kp/i2	Weight -kp/f
0.0	30	706.9	94.2	39760.8	3000	0.736
50.0						

Vertical Capacity:
Weight above Ground= 0.00 Total Weight= 25.47-kp *Soil Weight is not included
Side Resistance (Down)= 286.777-kp Side Resistance (Up)= 338.745-kp
Tip Resistance (Down)= 730.208-kp Tip Resistance (Up)= 0.000-kp
Total Ultimate Capacity (Down) Qult= 1016.985-kp Total Ultimate Capacity (Up)= 364.219-kp
Total Allowable Capacity (Down) Qallow= 386.791-kp Total Allowable Capacity (Up) Qallow= 194.846-kp
OK! Qallow > Q

Settlement Calculation:
At Q= 378.00-kp Settlement= 0.27542-in
At Xallow= 1.00-in Q= 682.47986-kp

Note: If the program cannot find a result or the result exceeds the upper limit. The result will be displayed as 99999.

ALLOWABLE CAPACITY vs FOUNDATION DEPTH

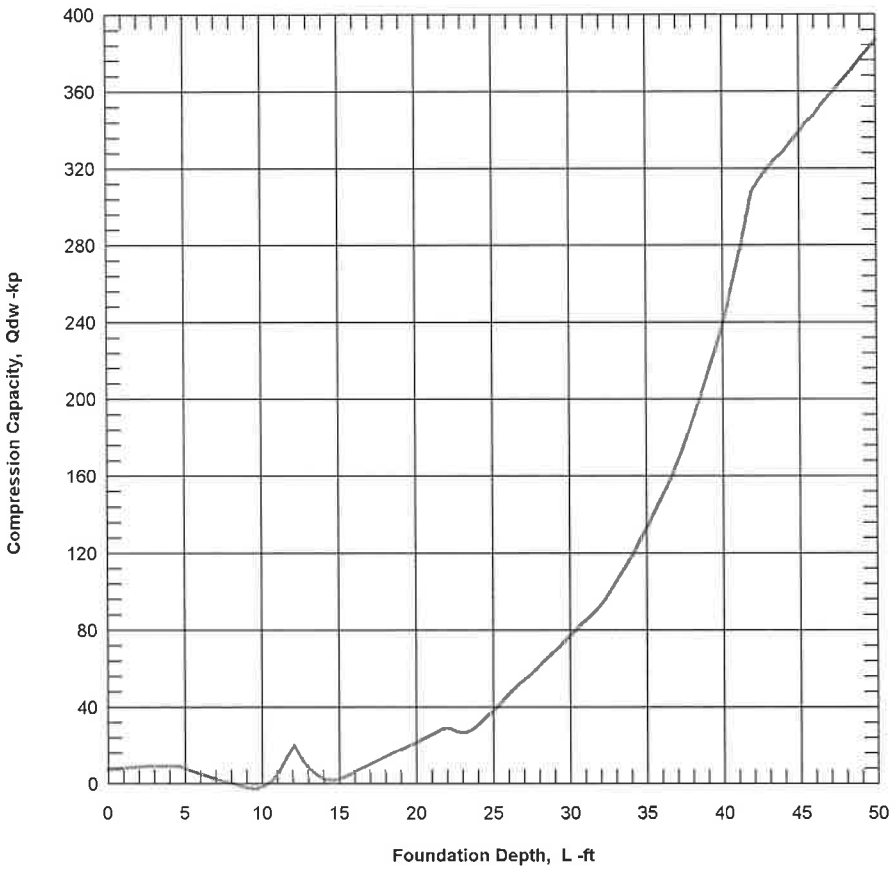

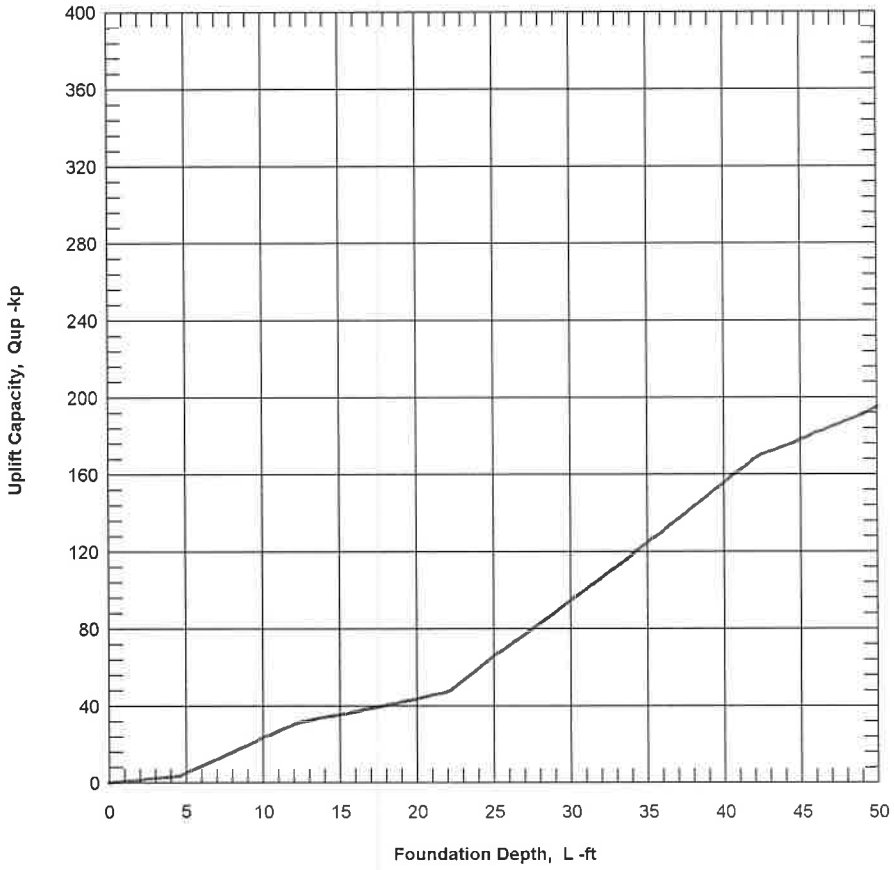

CivilTech Software

16G136 - 30-in-dia Drilled Pier
50-ft-deep; Using B-2 data

Figure 1

```
*************************************************************
                    ALLPILE 7
       VERTICAL ANALYSIS DETAILED OUTPUT
        Copyright by CivilTech Software
                www.civiltech.com
*************************************************************
Licensed to
Date: 7/8/2019  File: P:\Geotechnical\2016 Geotechnical\16G136 Alston 2 CI Bldgs Long Beach\Deep Foundation Design\Apr 28 2016\Boring B-2\30india_50ftdeep_drilled_01.alp                1.0

Title 1: 16G136 - 30-in-dia Drilled Pier
Title 2: 50-ft-deep; Using B-2 data

ALLPILE INPUT DATA:
**_____________________________________________________**

* Pile Type Page *
Unit: English
Diameter more than 24in (61cm). For bell section, select "Belled" in Diameter Variation of Pile Section Screen. Recommendation: 2 to 4 in Item 3 of Page F.
Pile Type: Drilled Shaft (dia >24 in. or 61 cm)

* Pile Profile *
Foundation Depth: 50.0 -ft
Top Height: 0 -ft
Slope Angle: 0
Pile Angle: 0

* Pile Properties *
Zs      Width   Area    Perim.    I       E       Weight  Mix     Out     In      Other.  Type
-ft     -in     -in2    -in       -in4    -kp/i2  -kp/f   %       Side    Side    Par.
_____________________________________________________________________________________________
0.0     30      706.9   94.2      39760.8 3000    0.736   0.0     4       4       0       Concrete (smooth)
50.0                                                                                      Pile Tip
Note:  Mix = % of Inside material/Outside material

Group Type: 0
Top Type: 1

Water Table: 13 -ft
Ground Elevation: 0 -ft

* Soil Properties *
Zs      Gamma   Phi     C       K       E50/Dr  Nspt    Type    Soil
-ft     -lb/f3  o       -kp/f2  -lb/i3   - %
0.0     120.0   0.0     0.500   272.0   0.92    9       3       Fill
3.5     108.0   0.0     0.750   276.5   0.92    9       1       Alluvium
12.0    120.0   34      0.00    90.6    49.45   17      4       Alluvium
13.0    58.7    34      0.00    64.1    52.46   19      4       Alluvium
22.0    70.6    0.0     1.500   921.9   0.54    22      2       Alluvium
24.5    71.1    30      1.000   1031.5  0.51    24      3       Alluvium
42.0    74.5    37      0.00    197.2   95.94   60      4       Alluvium

Surcharge Pressure on ground: 0 -kp/f2

* Zero Friction *
Zero Friction Start: 0 -ft      End: 4.5 -ft

* Negative Friction *
Negative Friction Start: 4.5 -ft        End: 12 -ft     with Factor: 1
Negative Friction Start: 22 -ft End: 24.5 -ft   with Factor: 1

ALLPILE ANALYSIS AND RESULTS:
**_____________________________________________________**

Pile Profile and Loading:
        Piletype: Drilled Shaft (dia >24 in. or 61 cm)
        Pile Length, L= 50.0 -ft
        Top Height, H= 0 -ft
        Slope Angle, As= 0
        Batter Angle, Ab= 0.00

        *To consider the influence of different soils below the pile tip, bearing stratum is defined
        from pile tip extending to 4 Diameter of pile, which is 10.0-ft (Input Page F, Item 3)

Single Pile, Vertical Analysis:
        Vertical Load with Load factor, Q= 378.0 -kp
        Vertical Load with Load factor and Pile Cap, Q= 378.0 -kp
          Load Factor for Vertical Loads= 1.0
          Vertical Loads Supported by Pile Cap: 0 %
          Kdown= 0.7      Kup= 0.4        Ka= 1.00


From Ztip=50.0 to 60.0-ft  Average Properties: Es= 959.90-kp/f2  C=0.00-kp/f2  Friction=37.00 Cp=0.14  Ksand=1.00
Limits of Max. tip resistance, q_lim= N/A
Batter Angle, Ab= 0.00    Batter Factor, Kbat= 1.00
Qtip_dw=730.2-kp  based on qult=148.7-kp/f2  and Base Area=4.9-ft2
Qtip_up=0.0-kp  and Base Area=0.0-ft2


TIP RESISTANCE (Down) CALCULATION:
Tip Depth= 50.0-ft Critical Depth Ratio Z/D= 20 Critical Depth= 50.0-ft
Equivalent Width of Tip= 2.50-ft,   Tip Area= 4.91-ft2   Tip Diameter= 2.50-ft
Bearing stratum from pile tip extending to 4 Diameter of pile. Bearing stratum= 10.00-ft
Btip: width at pile tip= 2.50-ft (For group pile, it is equivalent width).
Phi & C are average value in bearing stratum.
Batter Angle= 0.00,    Batter Factor for Tip and Side= 1.00

Ztip    Z/D     Z_lim   q_lim   Width   Area    Phi     C       Nq      Nc      Sv      qult    Qtip_dw
-ft             -ft     -kp/f2  -ft     -ft2    - o     -kp/f2                  -kp/f2  -kp/f2  -kp
_____________________________________________________________________________________________
50.0    20.0    50.0    N/A     2.50    4.91    37.0    0.00    37.1    9.0     4.0     148.7   730.2

 Ztip - Depth of pile tip from ground surface (Zs)
 D - Pile average diameter (below ground) for calculation of critical depth.  D=2.50-ft
 Z/D - Critical depth (for tip resistances) as ratio of depth/diameter. Vertical stress will be constant below critical depth
 Z_lim - Critical depth, calculated from Z/D (for tip resistances)
 q_lim -  Limit of Maximum tip resistance
 Btip: width or diameter at pile tip
 Bearing stratum: A stratum from  pile tip extending to some depth. Average soil properties in the stratum are used for bearing calculation


SIDE RESISTANCE (Uplift & Down) CALCULATION:
D       Z/D     Z_lim   Sf_lim  K_dw    K_up    dz
-ft             -ft     -kp/f2                  -ft
_____________________________________________________
2.50    20.0    50.00   N/A     0.7     0.4     0.100

 D - Pile average diameter for calculation of critical depth
```

Z/D - Critical depth (for side resistances) as ratio of depth/diameter. Vertical stress will be constant below critical depth
Z_lim - Critical depth calculated from Z/D (for side resistances)
Sf_lim - Limit of Maximum side resistance

Users Setting: Ka=1, which is constant. Ca=KcKaC=KcC

SIDE RESISTANCE (Up & Down) CALCULATION vs DEPTH:
Calculation is based on segment dZ= 0.10

Zs -ft	Prem -ft	Sv -kp/f2	Phi - o	Kf(<2) Delta	Delta - o	f_dw -kp/f2	f_up -kp/f2	C -kp/f2	Ka	Kc(<2) Ca	Ca_dw -kp/f2	Ca_up -kp/f2	Sf_dw -kp/f2	Sf_up -kp/f2	Weight -kp	Qneg -kp	Q_dw -kp	Q_up -kp	Torsion -kp-f
50.00	7.85	4.01	37.0	0.70	25.9	1.36	0.78	0.00	1.00	1.00	0.00	0.00	0.00	0.00	0.00	0.00	730.2	0.0	0.0
49.90	7.85	4.00	37.0	0.70	25.9	1.36	0.78	0.00	1.00	1.00	0.00	0.00	1.36	0.78	0.04	0.00	731.3	0.7	1.1
49.80	7.85	3.99	37.0	0.70	25.9	1.36	0.78	0.00	1.00	1.00	0.00	0.00	1.36	0.78	0.09	0.00	732.3	1.3	2.1
49.70	7.85	3.99	37.0	0.70	25.9	1.36	0.77	0.00	1.00	1.00	0.00	0.00	1.36	0.77	0.13	0.00	733.4	2.0	3.1
49.60	7.85	3.98	37.0	0.70	25.9	1.35	0.77	0.00	1.00	1.00	0.00	0.00	1.35	0.77	0.17	0.00	734.5	2.6	4.2
49.50	7.85	3.97	37.0	0.70	25.9	1.35	0.77	0.00	1.00	1.00	0.00	0.00	1.35	0.77	0.22	0.00	735.5	3.3	5.2
49.40	7.85	3.96	37.0	0.70	25.9	1.35	0.77	0.00	1.00	1.00	0.00	0.00	1.35	0.77	0.26	0.00	736.6	3.9	6.3
49.30	7.85	3.96	37.0	0.70	25.9	1.35	0.77	0.00	1.00	1.00	0.00	0.00	1.35	0.77	0.30	0.00	737.7	4.6	7.3
49.20	7.85	3.95	37.0	0.70	25.9	1.34	0.77	0.00	1.00	1.00	0.00	0.00	1.34	0.77	0.34	0.00	738.7	5.2	8.3
49.10	7.85	3.94	37.0	0.70	25.9	1.34	0.77	0.00	1.00	1.00	0.00	0.00	1.34	0.77	0.39	0.00	739.8	5.8	9.4
49.00	7.85	3.93	37.0	0.70	25.9	1.34	0.76	0.00	1.00	1.00	0.00	0.00	1.34	0.76	0.43	0.00	740.8	6.5	10.4
48.90	7.85	3.93	37.0	0.70	25.9	1.33	0.76	0.00	1.00	1.00	0.00	0.00	1.33	0.76	0.47	0.00	741.9	7.1	11.4
48.80	7.85	3.92	37.0	0.70	25.9	1.33	0.76	0.00	1.00	1.00	0.00	0.00	1.33	0.76	0.52	0.00	742.9	7.8	12.5
48.70	7.85	3.91	37.0	0.70	25.9	1.33	0.76	0.00	1.00	1.00	0.00	0.00	1.33	0.76	0.56	0.00	744.0	8.4	13.5
48.60	7.85	3.91	37.0	0.70	25.9	1.33	0.76	0.00	1.00	1.00	0.00	0.00	1.33	0.76	0.60	0.00	745.0	9.1	14.5
48.50	7.85	3.90	37.0	0.70	25.9	1.32	0.76	0.00	1.00	1.00	0.00	0.00	1.32	0.76	0.65	0.00	746.0	9.7	15.5
48.40	7.85	3.89	37.0	0.70	25.9	1.32	0.76	0.00	1.00	1.00	0.00	0.00	1.32	0.76	0.69	0.00	747.1	10.3	16.6
48.30	7.85	3.88	37.0	0.70	25.9	1.32	0.75	0.00	1.00	1.00	0.00	0.00	1.32	0.75	0.73	0.00	748.1	11.0	17.6
48.20	7.85	3.88	37.0	0.70	25.9	1.32	0.75	0.00	1.00	1.00	0.00	0.00	1.32	0.75	0.77	0.00	749.2	11.6	18.6
48.10	7.85	3.87	37.0	0.70	25.9	1.31	0.75	0.00	1.00	1.00	0.00	0.00	1.31	0.75	0.82	0.00	750.2	12.2	19.6
48.00	7.85	3.86	37.0	0.70	25.9	1.31	0.75	0.00	1.00	1.00	0.00	0.00	1.31	0.75	0.86	0.00	751.2	12.9	20.6
47.90	7.85	3.85	37.0	0.70	25.9	1.31	0.75	0.00	1.00	1.00	0.00	0.00	1.31	0.75	0.90	0.00	752.3	13.5	21.6
47.80	7.85	3.85	37.0	0.70	25.9	1.31	0.75	0.00	1.00	1.00	0.00	0.00	1.31	0.75	0.95	0.00	753.3	14.1	22.7
47.70	7.85	3.84	37.0	0.70	25.9	1.30	0.75	0.00	1.00	1.00	0.00	0.00	1.30	0.75	0.99	0.00	754.3	14.8	23.7
47.60	7.85	3.83	37.0	0.70	25.9	1.30	0.74	0.00	1.00	1.00	0.00	0.00	1.30	0.74	1.03	0.00	755.3	15.4	24.7
47.49	7.85	3.82	37.0	0.70	25.9	1.30	0.74	0.00	1.00	1.00	0.00	0.00	1.30	0.74	1.08	0.00	756.4	16.0	25.7
47.39	7.85	3.82	37.0	0.70	25.9	1.30	0.74	0.00	1.00	1.00	0.00	0.00	1.30	0.74	1.12	0.00	757.4	16.6	26.7
47.29	7.85	3.81	37.0	0.70	25.9	1.29	0.74	0.00	1.00	1.00	0.00	0.00	1.29	0.74	1.16	0.00	758.4	17.3	27.7
47.19	7.85	3.80	37.0	0.70	25.9	1.29	0.74	0.00	1.00	1.00	0.00	0.00	1.29	0.74	1.21	0.00	759.4	17.9	28.7
47.09	7.85	3.79	37.0	0.70	25.9	1.29	0.74	0.00	1.00	1.00	0.00	0.00	1.29	0.74	1.25	0.00	760.4	18.5	29.7
46.99	7.85	3.79	37.0	0.70	25.9	1.29	0.74	0.00	1.00	1.00	0.00	0.00	1.29	0.74	1.29	0.00	761.4	19.1	30.7
46.89	7.85	3.78	37.0	0.70	25.9	1.28	0.73	0.00	1.00	1.00	0.00	0.00	1.28	0.73	1.33	0.00	762.5	19.8	31.7
46.79	7.85	3.77	37.0	0.70	25.9	1.28	0.73	0.00	1.00	1.00	0.00	0.00	1.28	0.73	1.38	0.00	763.5	20.4	32.6
46.69	7.85	3.76	37.0	0.70	25.9	1.28	0.73	0.00	1.00	1.00	0.00	0.00	1.28	0.73	1.42	0.00	764.5	21.0	33.6
46.59	7.85	3.76	37.0	0.70	25.9	1.28	0.73	0.00	1.00	1.00	0.00	0.00	1.28	0.73	1.46	0.00	765.5	21.6	34.6
46.49	7.85	3.75	37.0	0.70	25.9	1.27	0.73	0.00	1.00	1.00	0.00	0.00	1.27	0.73	1.51	0.00	766.5	22.2	35.6
46.39	7.85	3.74	37.0	0.70	25.9	1.27	0.73	0.00	1.00	1.00	0.00	0.00	1.27	0.73	1.55	0.00	767.5	22.8	36.6
46.29	7.85	3.73	37.0	0.70	25.9	1.27	0.73	0.00	1.00	1.00	0.00	0.00	1.27	0.73	1.59	0.00	768.5	23.5	37.6
46.19	7.85	3.73	37.0	0.70	25.9	1.27	0.72	0.00	1.00	1.00	0.00	0.00	1.27	0.72	1.64	0.00	769.5	24.1	38.5
46.09	7.85	3.72	37.0	0.70	25.9	1.26	0.72	0.00	1.00	1.00	0.00	0.00	1.26	0.72	1.68	0.00	770.5	24.7	39.5
45.99	7.85	3.71	37.0	0.70	25.9	1.26	0.72	0.00	1.00	1.00	0.00	0.00	1.26	0.72	1.72	0.00	771.5	25.3	40.5
45.89	7.85	3.70	37.0	0.70	25.9	1.26	0.72	0.00	1.00	1.00	0.00	0.00	1.26	0.72	1.77	0.00	772.4	25.9	41.5
45.79	7.85	3.70	37.0	0.70	25.9	1.26	0.72	0.00	1.00	1.00	0.00	0.00	1.26	0.72	1.81	0.00	773.4	26.5	42.4
45.69	7.85	3.69	37.0	0.70	25.9	1.25	0.72	0.00	1.00	1.00	0.00	0.00	1.25	0.72	1.85	0.00	774.4	27.1	43.4
45.59	7.85	3.68	37.0	0.70	25.9	1.25	0.71	0.00	1.00	1.00	0.00	0.00	1.25	0.71	1.89	0.00	775.4	27.7	44.4
45.49	7.85	3.67	37.0	0.70	25.9	1.25	0.71	0.00	1.00	1.00	0.00	0.00	1.25	0.71	1.94	0.00	776.4	28.3	45.3
45.39	7.85	3.67	37.0	0.70	25.9	1.25	0.71	0.00	1.00	1.00	0.00	0.00	1.25	0.71	1.98	0.00	777.4	28.9	46.3
45.29	7.85	3.66	37.0	0.70	25.9	1.24	0.71	0.00	1.00	1.00	0.00	0.00	1.24	0.71	2.02	0.00	778.3	29.5	47.2
45.19	7.85	3.65	37.0	0.70	25.9	1.24	0.71	0.00	1.00	1.00	0.00	0.00	1.24	0.71	2.07	0.00	779.3	30.1	48.2
45.09	7.85	3.64	37.0	0.70	25.9	1.24	0.71	0.00	1.00	1.00	0.00	0.00	1.24	0.71	2.11	0.00	780.3	30.7	49.2
44.99	7.85	3.64	37.0	0.70	25.9	1.24	0.71	0.00	1.00	1.00	0.00	0.00	1.24	0.71	2.15	0.00	781.3	31.3	50.1
44.89	7.85	3.63	37.0	0.70	25.9	1.23	0.70	0.00	1.00	1.00	0.00	0.00	1.23	0.70	2.20	0.00	782.2	31.9	51.1
44.79	7.85	3.62	37.0	0.70	25.9	1.23	0.70	0.00	1.00	1.00	0.00	0.00	1.23	0.70	2.24	0.00	783.2	32.5	52.0
44.69	7.85	3.61	37.0	0.70	25.9	1.23	0.70	0.00	1.00	1.00	0.00	0.00	1.23	0.70	2.28	0.00	784.2	33.1	53.0
44.59	7.85	3.61	37.0	0.70	25.9	1.23	0.70	0.00	1.00	1.00	0.00	0.00	1.23	0.70	2.32	0.00	785.1	33.7	53.9
44.49	7.85	3.60	37.0	0.70	25.9	1.22	0.70	0.00	1.00	1.00	0.00	0.00	1.22	0.70	2.37	0.00	786.1	34.3	54.9
44.39	7.85	3.59	37.0	0.70	25.9	1.22	0.70	0.00	1.00	1.00	0.00	0.00	1.22	0.70	2.41	0.00	787.1	34.9	55.8
44.29	7.85	3.58	37.0	0.70	25.9	1.22	0.70	0.00	1.00	1.00	0.00	0.00	1.22	0.70	2.45	0.00	788.0	35.5	56.7
44.19	7.85	3.58	37.0	0.70	25.9	1.22	0.69	0.00	1.00	1.00	0.00	0.00	1.22	0.69	2.50	0.00	789.0	36.1	57.7
44.09	7.85	3.57	37.0	0.70	25.9	1.21	0.69	0.00	1.00	1.00	0.00	0.00	1.21	0.69	2.54	0.00	789.9	36.7	58.6
43.99	7.85	3.56	37.0	0.70	25.9	1.21	0.69	0.00	1.00	1.00	0.00	0.00	1.21	0.69	2.58	0.00	790.9	37.3	59.6
43.89	7.85	3.55	37.0	0.70	25.9	1.21	0.69	0.00	1.00	1.00	0.00	0.00	1.21	0.69	2.63	0.00	791.8	37.8	60.5
43.79	7.85	3.55	37.0	0.70	25.9	1.21	0.69	0.00	1.00	1.00	0.00	0.00	1.21	0.69	2.67	0.00	792.8	38.4	61.4
43.69	7.85	3.54	37.0	0.70	25.9	1.20	0.69	0.00	1.00	1.00	0.00	0.00	1.20	0.69	2.71	0.00	793.7	39.0	62.3
43.59	7.85	3.53	37.0	0.70	25.9	1.20	0.69	0.00	1.00	1.00	0.00	0.00	1.20	0.69	2.76	0.00	794.7	39.6	63.3
43.49	7.85	3.52	37.0	0.70	25.9	1.20	0.68	0.00	1.00	1.00	0.00	0.00	1.20	0.68	2.80	0.00	795.6	40.2	64.2
43.39	7.85	3.52	37.0	0.70	25.9	1.20	0.68	0.00	1.00	1.00	0.00	0.00	1.20	0.68	2.84	0.00	796.5	40.7	65.1
43.29	7.85	3.51	37.0	0.70	25.9	1.19	0.68	0.00	1.00	1.00	0.00	0.00	1.19	0.68	2.88	0.00	797.5	41.3	66.0
43.19	7.85	3.50	37.0	0.70	25.9	1.19	0.68	0.00	1.00	1.00	0.00	0.00	1.19	0.68	2.93	0.00	798.4	41.9	67.0
43.09	7.85	3.49	37.0	0.70	25.9	1.19	0.68	0.00	1.00	1.00	0.00	0.00	1.19	0.68	2.97	0.00	799.4	42.5	67.9
42.99	7.85	3.49	37.0	0.70	25.9	1.19	0.68	0.00	1.00	1.00	0.00	0.00	1.19	0.68	3.01	0.00	800.3	43.1	68.8
42.89	7.85	3.48	37.0	0.70	25.9	1.18	0.68	0.00	1.00	1.00	0.00	0.00	1.18	0.68	3.06	0.00	801.2	43.6	69.7
42.79	7.85	3.47	37.0	0.70	25.9	1.18	0.67	0.00	1.00	1.00	0.00	0.00	1.18	0.67	3.10	0.00	802.1	44.2	70.6
42.69	7.85	3.46	37.0	0.70	25.9	1.18	0.67	0.00	1.00	1.00	0.00	0.00	1.18	0.67	3.14	0.00	803.1	44.8	71.5
42.59	7.85	3.46	37.0	0.70	25.9	1.18	0.67	0.00	1.00	1.00	0.00	0.00	1.18	0.67	3.19	0.00	804.0	45.4	72.4
42.48	7.85	3.45	37.0	0.70	25.9	1.17	0.67	0.00	1.00	1.00	0.00	0.00	1.17	0.67	3.23	0.00	804.9	45.9	73.3
42.38	7.85	3.44	37.0	0.70	25.9	1.17	0.67	0.00	1.00	1.00	0.00	0.00	1.17	0.67	3.27	0.00	805.8	46.5	74.2
42.28	7.85	3.43	37.0	0.70	25.9	1.17	0.67	0.00	1.00	1.00	0.00	0.00	1.17	0.67	3.32	0.00	806.8	47.1	75.1
42.18	7.85	3.43	37.0	0.70	25.9	1.16	0.67	0.00	1.00	1.00	0.00	0.00	1.16	0.67	3.36	0.00	807.7	47.6	76.0
42.08	7.85	3.42	37.0	0.70	25.9	1.16	0.66	0.00	1.00	1.00	0.00	0.00	1.16	0.66	3.40	0.00	808.6	48.2	76.9
41.98	7.85	3.41	30.0	0.70	21.0	0.92	0.52	1.00	1.00	1.00	1.00	1.00	1.92	1.52	3.44	0.00	810.1	49.4	78.6
41.88	7.85	3.41	30.0	0.70	21.0	0.92	0.52	1.00	1.00	1.00	1.00	1.00	1.92	1.52	3.49	0.00	811.6	50.7	80.3
41.78	7.85	3.40	30.0	0.70	21.0	0.91	0.52	1.00	1.00	1.00	1.00	1.00	1.91	1.52	3.53	0.00	813.1	51.9	82.0
41.68	7.85	3.39	30.0	0.70	21.0	0.91	0.52	1.00	1.00	1.00	1.00	1.00	1.91	1.52	3.57	0.00	814.6	53.2	83.7
41.58	7.85	3.38	30.0	0.70	21.0	0.91	0.52	1.00	1.00	1.00	1.00	1.00	1.91	1.52	3.62	0.00	816.1	54.4	85.4
41.48	7.85	3.38	30.0	0.70	21.0	0.91	0.52	1.00	1.00	1.00	1.00	1.00	1.91	1.52	3.66	0.00	817.6	55.6	87.1
41.38	7.85	3.37	30.0	0.70	21.0	0.91	0.52	1.00	1.00	1.00	1.00	1.00	1.91	1.52	3.70	0.00	819.1	56.9	88.7
41.28	7.85	3.36	30.0	0.70	21.0	0.90	0.52	1.00	1.00	1.00	1.00	1.00	1.90	1.52	3.75	0.00	820.6	58.1	90.4
41.18	7.85	3.36	30.0	0.70	21.0	0.90	0.52	1.00	1.00	1.00	1.00	1.00	1.90	1.52	3.79	0.00	822.1	59.3	92.1
41.08	7.85	3.35	30.0	0.70	21.0	0.90	0.51	1.00	1.00	1.00	1.00	1.00	1.90	1.51	3.83	0.00	823.6	60.6	93.8
40.98	7.85	3.34	30.0	0.70	21.0	0.90	0.51	1.00	1.00	1.00	1.00	1.00	1.90	1.51	3.87	0.00	825.1	61.8	95.5
40.88	7.85	3.33	30.0	0.70	21.0	0.90	0.51	1.00	1.00	1.00	1.00	1.00	1.90	1.51	3.92	0.00	826.6	63.0	97.1
40.78	7.85	3.33	30.0	0.70	21.0	0.89	0.51	1.00	1.00	1.00	1.00	1.00	1.89	1.51	3.96	0.00	828.1	64.3	98.8
40.68	7.85	3.32	30.0	0.70	21.0	0.89	0.51	1.00	1.00	1.00	1.00	1.00	1.89	1.51	4.00	0.00	829.6	65.5	100.5
40.58	7.85	3.31	30.0	0.70	21.0	0.89	0.51	1.00	1.00	1.00	1.00	1.00	1.89	1.51	4.05	0.00	831.0	66.7	102.1
40.48	7.85	3.31	30.0	0.70	21.0	0.89	0.51	1.00	1.00	1.00	1.00	1.00	1.89	1.51	4.09	0.00	832.5	68.0	103.8
40.38	7.85	3.30	30.0	0.70	21.0	0.89	0.51	1.00	1.00	1.00	1.00	1.00	1.89	1.51	4.13	0.00	834.0	69.2	105.5
40.28	7.85	3.29	30.0	0.70	21.0	0.88	0.51	1.00	1.00	1.00	1.00	1.00	1.88	1.51	4.18	0.00	835.5	70.4	107.2
40.18	7.85	3.28	30.0	0.70	21.0	0.88	0.50	1.00	1.00	1.00	1.00	1.00	1.88	1.50	4.22	0.00	837.0	71.6	108.8
40.08	7.85	3.28	30.0	0.70	21.0	0.88	0.50	1.00	1.00	1.00	1.00	1.00	1.88	1.50	4.26	0.00	838.5	72.9	110.5
39.98	7.85	3.27	30.0	0.70	21.0	0.88	0.50	1.00	1.00	1.00	1.00	1.00	1.88	1.50	4.31	0.00	839.9	74.1	112.1
39.88	7.85	3.26	30.0	0.70	21.0	0.88	0.50	1.00	1.00	1.00	1.00	1.00	1.88	1.50	4.35	0.00	841.4	75.3	113.8
39.78	7.85	3.26	30.0	0.70	21.0	0.87	0.50	1.00	1.00	1.00	1.00	1.00	1.87	1.50	4.39	0.00	842.9	76.5	115.5
39.68	7.85	3.25	30.0	0.70	21.0	0.87	0.50	1.00	1.00	1.00	1.00	1.00	1.87	1.50	4.43	0.00	844.4	77.8	117.1
39.58	7.85	3.24	30.0	0.70	21.0	0.87	0.50	1.00	1.00	1.00	1.00	1.00	1.87	1.50	4.48	0.00	845.8	79.0	118.8

39.48	7.85	3.23	30.0	0.70	21.0	0.87	0.50	1.00	1.00	1.00	1.00	1.00	1.87	1.50	4.52	0.00	847.3	80.2	120.4
39.38	7.85	3.23	30.0	0.70	21.0	0.87	0.50	1.00	1.00	1.00	1.00	1.00	1.87	1.50	4.56	0.00	848.8	81.4	122.1
39.28	7.85	3.22	30.0	0.70	21.0	0.87	0.49	1.00	1.00	1.00	1.00	1.00	1.87	1.49	4.61	0.00	850.2	82.6	123.7
39.18	7.85	3.21	30.0	0.70	21.0	0.86	0.49	1.00	1.00	1.00	1.00	1.00	1.86	1.49	4.65	0.00	851.7	83.9	125.4
39.08	7.85	3.21	30.0	0.70	21.0	0.86	0.49	1.00	1.00	1.00	1.00	1.00	1.86	1.49	4.69	0.00	853.2	85.1	127.0
38.98	7.85	3.20	30.0	0.70	21.0	0.86	0.49	1.00	1.00	1.00	1.00	1.00	1.86	1.49	4.74	0.00	854.6	86.3	128.7
38.88	7.85	3.19	30.0	0.70	21.0	0.86	0.49	1.00	1.00	1.00	1.00	1.00	1.86	1.49	4.78	0.00	856.1	87.5	130.3
38.78	7.85	3.18	30.0	0.70	21.0	0.86	0.49	1.00	1.00	1.00	1.00	1.00	1.86	1.49	4.82	0.00	857.6	88.7	132.0
38.68	7.85	3.18	30.0	0.70	21.0	0.85	0.49	1.00	1.00	1.00	1.00	1.00	1.85	1.49	4.87	0.00	859.0	89.9	133.6
38.58	7.85	3.17	30.0	0.70	21.0	0.85	0.49	1.00	1.00	1.00	1.00	1.00	1.85	1.49	4.91	0.00	860.5	91.1	135.2
38.48	7.85	3.16	30.0	0.70	21.0	0.85	0.49	1.00	1.00	1.00	1.00	1.00	1.85	1.49	4.95	0.00	861.9	92.4	136.9
38.38	7.85	3.16	30.0	0.70	21.0	0.85	0.48	1.00	1.00	1.00	1.00	1.00	1.85	1.48	4.99	0.00	863.4	93.6	138.5
38.28	7.85	3.15	30.0	0.70	21.0	0.85	0.48	1.00	1.00	1.00	1.00	1.00	1.85	1.48	5.04	0.00	864.8	94.8	140.2
38.18	7.85	3.14	30.0	0.70	21.0	0.84	0.48	1.00	1.00	1.00	1.00	1.00	1.84	1.48	5.08	0.00	866.3	96.0	141.8
38.08	7.85	3.13	30.0	0.70	21.0	0.84	0.48	1.00	1.00	1.00	1.00	1.00	1.84	1.48	5.12	0.00	867.7	97.2	143.4
37.98	7.85	3.13	30.0	0.70	21.0	0.84	0.48	1.00	1.00	1.00	1.00	1.00	1.84	1.48	5.17	0.00	869.2	98.4	145.1
37.88	7.85	3.12	30.0	0.70	21.0	0.84	0.48	1.00	1.00	1.00	1.00	1.00	1.84	1.48	5.21	0.00	870.6	99.6	146.7
37.78	7.85	3.11	30.0	0.70	21.0	0.84	0.48	1.00	1.00	1.00	1.00	1.00	1.84	1.48	5.25	0.00	872.1	100.8	148.3
37.68	7.85	3.11	30.0	0.70	21.0	0.83	0.48	1.00	1.00	1.00	1.00	1.00	1.83	1.48	5.30	0.00	873.5	102.0	149.9
37.58	7.85	3.10	30.0	0.70	21.0	0.83	0.48	1.00	1.00	1.00	1.00	1.00	1.83	1.48	5.34	0.00	875.0	103.2	151.6
37.47	7.85	3.09	30.0	0.70	21.0	0.83	0.47	1.00	1.00	1.00	1.00	1.00	1.83	1.47	5.38	0.00	876.4	104.4	153.2
37.37	7.85	3.09	30.0	0.70	21.0	0.83	0.47	1.00	1.00	1.00	1.00	1.00	1.83	1.47	5.42	0.00	877.8	105.6	154.8
37.27	7.85	3.08	30.0	0.70	21.0	0.83	0.47	1.00	1.00	1.00	1.00	1.00	1.83	1.47	5.47	0.00	879.3	106.8	156.4
37.17	7.85	3.07	30.0	0.70	21.0	0.83	0.47	1.00	1.00	1.00	1.00	1.00	1.83	1.47	5.51	0.00	880.7	108.0	158.1
37.07	7.85	3.06	30.0	0.70	21.0	0.82	0.47	1.00	1.00	1.00	1.00	1.00	1.82	1.47	5.55	0.00	882.1	109.2	159.7
36.97	7.85	3.06	30.0	0.70	21.0	0.82	0.47	1.00	1.00	1.00	1.00	1.00	1.82	1.47	5.60	0.00	883.6	110.4	161.3
36.87	7.85	3.05	30.0	0.70	21.0	0.82	0.47	1.00	1.00	1.00	1.00	1.00	1.82	1.47	5.64	0.00	885.0	111.6	162.9
36.77	7.85	3.04	30.0	0.70	21.0	0.82	0.47	1.00	1.00	1.00	1.00	1.00	1.82	1.47	5.68	0.00	886.4	112.8	164.5
36.67	7.85	3.04	30.0	0.70	21.0	0.82	0.47	1.00	1.00	1.00	1.00	1.00	1.82	1.47	5.73	0.00	887.9	114.0	166.1
36.57	7.85	3.03	30.0	0.70	21.0	0.81	0.46	1.00	1.00	1.00	1.00	1.00	1.81	1.46	5.77	0.00	889.3	115.2	167.7
36.47	7.85	3.02	30.0	0.70	21.0	0.81	0.46	1.00	1.00	1.00	1.00	1.00	1.81	1.46	5.81	0.00	890.7	116.4	169.4
36.37	7.85	3.01	30.0	0.70	21.0	0.81	0.46	1.00	1.00	1.00	1.00	1.00	1.81	1.46	5.86	0.00	892.1	117.6	171.0
36.27	7.85	3.01	30.0	0.70	21.0	0.81	0.46	1.00	1.00	1.00	1.00	1.00	1.81	1.46	5.90	0.00	893.6	118.8	172.6
36.17	7.85	3.00	30.0	0.70	21.0	0.81	0.46	1.00	1.00	1.00	1.00	1.00	1.81	1.46	5.94	0.00	895.0	120.0	174.2
36.07	7.85	2.99	30.0	0.70	21.0	0.80	0.46	1.00	1.00	1.00	1.00	1.00	1.80	1.46	5.98	0.00	896.4	121.2	175.8
35.97	7.85	2.99	30.0	0.70	21.0	0.80	0.46	1.00	1.00	1.00	1.00	1.00	1.80	1.46	6.03	0.00	897.8	122.4	177.4
35.87	7.85	2.98	30.0	0.70	21.0	0.80	0.46	1.00	1.00	1.00	1.00	1.00	1.80	1.46	6.07	0.00	899.2	123.6	179.0
35.77	7.85	2.97	30.0	0.70	21.0	0.80	0.46	1.00	1.00	1.00	1.00	1.00	1.80	1.46	6.11	0.00	900.6	124.7	180.6
35.67	7.85	2.96	30.0	0.70	21.0	0.80	0.46	1.00	1.00	1.00	1.00	1.00	1.80	1.46	6.16	0.00	902.1	125.9	182.2
35.57	7.85	2.96	30.0	0.70	21.0	0.79	0.45	1.00	1.00	1.00	1.00	1.00	1.79	1.45	6.20	0.00	903.5	127.1	183.8
35.47	7.85	2.95	30.0	0.70	21.0	0.79	0.45	1.00	1.00	1.00	1.00	1.00	1.79	1.45	6.24	0.00	904.9	128.3	185.4
35.37	7.85	2.94	30.0	0.70	21.0	0.79	0.45	1.00	1.00	1.00	1.00	1.00	1.79	1.45	6.29	0.00	906.3	129.5	187.0
35.27	7.85	2.94	30.0	0.70	21.0	0.79	0.45	1.00	1.00	1.00	1.00	1.00	1.79	1.45	6.33	0.00	907.7	130.7	188.5
35.17	7.85	2.93	30.0	0.70	21.0	0.79	0.45	1.00	1.00	1.00	1.00	1.00	1.79	1.45	6.37	0.00	909.1	131.9	190.1
35.07	7.85	2.92	30.0	0.70	21.0	0.78	0.45	1.00	1.00	1.00	1.00	1.00	1.78	1.45	6.42	0.00	910.5	133.0	191.7
34.97	7.85	2.91	30.0	0.70	21.0	0.78	0.45	1.00	1.00	1.00	1.00	1.00	1.78	1.45	6.46	0.00	911.9	134.2	193.3
34.87	7.85	2.91	30.0	0.70	21.0	0.78	0.45	1.00	1.00	1.00	1.00	1.00	1.78	1.45	6.50	0.00	913.3	135.4	194.9
34.77	7.85	2.90	30.0	0.70	21.0	0.78	0.45	1.00	1.00	1.00	1.00	1.00	1.78	1.45	6.54	0.00	914.7	136.6	196.5
34.67	7.85	2.89	30.0	0.70	21.0	0.78	0.44	1.00	1.00	1.00	1.00	1.00	1.78	1.44	6.59	0.00	916.1	137.8	198.1
34.57	7.85	2.89	30.0	0.70	21.0	0.78	0.44	1.00	1.00	1.00	1.00	1.00	1.78	1.44	6.63	0.00	917.5	138.9	199.6
34.47	7.85	2.88	30.0	0.70	21.0	0.77	0.44	1.00	1.00	1.00	1.00	1.00	1.77	1.44	6.67	0.00	918.9	140.1	201.2
34.37	7.85	2.87	30.0	0.70	21.0	0.77	0.44	1.00	1.00	1.00	1.00	1.00	1.77	1.44	6.72	0.00	920.3	141.3	202.8
34.27	7.85	2.86	30.0	0.70	21.0	0.77	0.44	1.00	1.00	1.00	1.00	1.00	1.77	1.44	6.76	0.00	921.7	142.5	204.4
34.17	7.85	2.86	30.0	0.70	21.0	0.77	0.44	1.00	1.00	1.00	1.00	1.00	1.77	1.44	6.80	0.00	923.1	143.6	206.0
34.07	7.85	2.85	30.0	0.70	21.0	0.77	0.44	1.00	1.00	1.00	1.00	1.00	1.77	1.44	6.85	0.00	924.5	144.8	207.5
33.97	7.85	2.84	30.0	0.70	21.0	0.76	0.44	1.00	1.00	1.00	1.00	1.00	1.76	1.44	6.89	0.00	925.8	146.0	209.1
33.87	7.85	2.84	30.0	0.70	21.0	0.76	0.44	1.00	1.00	1.00	1.00	1.00	1.76	1.44	6.93	0.00	927.2	147.2	210.7
33.77	7.85	2.83	30.0	0.70	21.0	0.76	0.43	1.00	1.00	1.00	1.00	1.00	1.76	1.43	6.97	0.00	928.6	148.3	212.2
33.67	7.85	2.82	30.0	0.70	21.0	0.76	0.43	1.00	1.00	1.00	1.00	1.00	1.76	1.43	7.02	0.00	930.0	149.5	213.8
33.57	7.85	2.81	30.0	0.70	21.0	0.76	0.43	1.00	1.00	1.00	1.00	1.00	1.76	1.43	7.06	0.00	931.4	150.7	215.4
33.47	7.85	2.81	30.0	0.70	21.0	0.75	0.43	1.00	1.00	1.00	1.00	1.00	1.75	1.43	7.10	0.00	932.8	151.8	216.9
33.37	7.85	2.80	30.0	0.70	21.0	0.75	0.43	1.00	1.00	1.00	1.00	1.00	1.75	1.43	7.15	0.00	934.1	153.0	218.5
33.27	7.85	2.79	30.0	0.70	21.0	0.75	0.43	1.00	1.00	1.00	1.00	1.00	1.75	1.43	7.19	0.00	935.5	154.2	220.1
33.17	7.85	2.79	30.0	0.70	21.0	0.75	0.43	1.00	1.00	1.00	1.00	1.00	1.75	1.43	7.23	0.00	936.9	155.3	221.6
33.07	7.85	2.78	30.0	0.70	21.0	0.75	0.43	1.00	1.00	1.00	1.00	1.00	1.75	1.43	7.28	0.00	938.3	156.5	223.2
32.97	7.85	2.77	30.0	0.70	21.0	0.74	0.43	1.00	1.00	1.00	1.00	1.00	1.74	1.43	7.32	0.00	939.6	157.7	224.8
32.87	7.85	2.76	30.0	0.70	21.0	0.74	0.42	1.00	1.00	1.00	1.00	1.00	1.74	1.42	7.36	0.00	941.0	158.8	226.3
32.77	7.85	2.76	30.0	0.70	21.0	0.74	0.42	1.00	1.00	1.00	1.00	1.00	1.74	1.42	7.41	0.00	942.4	160.0	227.9
32.67	7.85	2.75	30.0	0.70	21.0	0.74	0.42	1.00	1.00	1.00	1.00	1.00	1.74	1.42	7.45	0.00	943.7	161.2	229.4
32.57	7.85	2.74	30.0	0.70	21.0	0.74	0.42	1.00	1.00	1.00	1.00	1.00	1.74	1.42	7.49	0.00	945.1	162.3	231.0
32.46	7.85	2.74	30.0	0.70	21.0	0.74	0.42	1.00	1.00	1.00	1.00	1.00	1.74	1.42	7.53	0.00	946.5	163.5	232.5
32.36	7.85	2.73	30.0	0.70	21.0	0.73	0.42	1.00	1.00	1.00	1.00	1.00	1.73	1.42	7.58	0.00	947.8	164.6	234.1
32.26	7.85	2.72	30.0	0.70	21.0	0.73	0.42	1.00	1.00	1.00	1.00	1.00	1.73	1.42	7.62	0.00	949.2	165.8	235.6
32.16	7.85	2.71	30.0	0.70	21.0	0.73	0.42	1.00	1.00	1.00	1.00	1.00	1.73	1.42	7.66	0.00	950.6	167.0	237.2
32.06	7.85	2.71	30.0	0.70	21.0	0.73	0.42	1.00	1.00	1.00	1.00	1.00	1.73	1.42	7.71	0.00	951.9	168.1	238.7
31.96	7.85	2.70	30.0	0.70	21.0	0.73	0.41	1.00	1.00	1.00	1.00	1.00	1.73	1.41	7.75	0.00	953.3	169.3	240.2
31.86	7.85	2.69	30.0	0.70	21.0	0.72	0.41	1.00	1.00	1.00	1.00	1.00	1.72	1.41	7.79	0.00	954.6	170.4	241.8
31.76	7.85	2.69	30.0	0.70	21.0	0.72	0.41	1.00	1.00	1.00	1.00	1.00	1.72	1.41	7.84	0.00	956.0	171.6	243.3
31.66	7.85	2.68	30.0	0.70	21.0	0.72	0.41	1.00	1.00	1.00	1.00	1.00	1.72	1.41	7.88	0.00	957.3	172.7	244.9
31.56	7.85	2.67	30.0	0.70	21.0	0.72	0.41	1.00	1.00	1.00	1.00	1.00	1.72	1.41	7.92	0.00	958.7	173.9	246.4
31.46	7.85	2.66	30.0	0.70	21.0	0.72	0.41	1.00	1.00	1.00	1.00	1.00	1.72	1.41	7.96	0.00	960.0	175.0	247.9
31.36	7.85	2.66	30.0	0.70	21.0	0.71	0.41	1.00	1.00	1.00	1.00	1.00	1.71	1.41	8.01	0.00	961.4	176.2	249.5
31.26	7.85	2.65	30.0	0.70	21.0	0.71	0.41	1.00	1.00	1.00	1.00	1.00	1.71	1.41	8.05	0.00	962.7	177.3	251.0
31.16	7.85	2.64	30.0	0.70	21.0	0.71	0.41	1.00	1.00	1.00	1.00	1.00	1.71	1.41	8.09	0.00	964.1	178.5	252.5
31.06	7.85	2.64	30.0	0.70	21.0	0.71	0.40	1.00	1.00	1.00	1.00	1.00	1.71	1.40	8.14	0.00	965.4	179.6	254.1
30.96	7.85	2.63	30.0	0.70	21.0	0.71	0.40	1.00	1.00	1.00	1.00	1.00	1.71	1.40	8.18	0.00	966.8	180.8	255.6
30.86	7.85	2.62	30.0	0.70	21.0	0.70	0.40	1.00	1.00	1.00	1.00	1.00	1.70	1.40	8.22	0.00	968.1	181.9	257.1
30.76	7.85	2.61	30.0	0.70	21.0	0.70	0.40	1.00	1.00	1.00	1.00	1.00	1.70	1.40	8.27	0.00	969.5	183.1	258.6
30.66	7.85	2.61	30.0	0.70	21.0	0.70	0.40	1.00	1.00	1.00	1.00	1.00	1.70	1.40	8.31	0.00	970.8	184.2	260.2
30.56	7.85	2.60	30.0	0.70	21.0	0.70	0.40	1.00	1.00	1.00	1.00	1.00	1.70	1.40	8.35	0.00	972.1	185.4	261.7
30.46	7.85	2.59	30.0	0.70	21.0	0.70	0.40	1.00	1.00	1.00	1.00	1.00	1.70	1.40	8.40	0.00	973.5	186.5	263.2
30.36	7.85	2.59	30.0	0.70	21.0	0.69	0.40	1.00	1.00	1.00	1.00	1.00	1.69	1.40	8.44	0.00	974.8	187.6	264.7
30.26	7.85	2.58	30.0	0.70	21.0	0.69	0.40	1.00	1.00	1.00	1.00	1.00	1.69	1.40	8.48	0.00	976.1	188.8	266.3
30.16	7.85	2.57	30.0	0.70	21.0	0.69	0.39	1.00	1.00	1.00	1.00	1.00	1.69	1.39	8.52	0.00	977.5	189.9	267.8
30.06	7.85	2.56	30.0	0.70	21.0	0.69	0.39	1.00	1.00	1.00	1.00	1.00	1.69	1.39	8.57	0.00	978.8	191.1	269.3
29.96	7.85	2.56	30.0	0.70	21.0	0.69	0.39	1.00	1.00	1.00	1.00	1.00	1.69	1.39	8.61	0.00	980.1	192.2	270.8
29.86	7.85	2.55	30.0	0.70	21.0	0.69	0.39	1.00	1.00	1.00	1.00	1.00	1.69	1.39	8.65	0.00	981.4	193.3	272.3
29.76	7.85	2.54	30.0	0.70	21.0	0.68	0.39	1.00	1.00	1.00	1.00	1.00	1.68	1.39	8.70	0.00	982.8	194.5	273.8
29.66	7.85	2.54	30.0	0.70	21.0	0.68	0.39	1.00	1.00	1.00	1.00	1.00	1.68	1.39	8.74	0.00	984.1	195.6	275.3
29.56	7.85	2.53	30.0	0.70	21.0	0.68	0.39	1.00	1.00	1.00	1.00	1.00	1.68	1.39	8.78	0.00	985.4	196.7	276.8
29.46	7.85	2.52	30.0	0.70	21.0	0.68	0.39	1.00	1.00	1.00	1.00	1.00	1.68	1.39	8.83	0.00	986.7	197.9	278.3
29.36	7.85	2.52	30.0	0.70	21.0	0.68	0.39	1.00	1.00	1.00	1.00	1.00	1.68	1.39	8.87	0.00	988.0	199.0	279.8
29.26	7.85	2.51	30.0	0.70	21.0	0.67	0.39	1.00	1.00	1.00	1.00	1.00	1.67	1.39	8.91	0.00	989.4	200.1	281.3
29.16	7.85	2.50	30.0	0.70	21.0	0.67	0.38	1.00	1.00	1.00	1.00	1.00	1.67	1.38	8.96	0.00	990.7	201.3	282.9
29.06	7.85	2.49	30.0	0.70	21.0	0.67	0.38	1.00	1.00	1.00	1.00	1.00	1.67	1.38	9.00	0.00	992.0	202.4	284.4
28.96	7.85	2.49	30.0	0.70	21.0	0.67	0.38	1.00	1.00	1.00	1.00	1.00	1.67	1.38	9.04	0.00	993.3	203.5	285.8
28.86	7.85	2.48	30.0	0.70	21.0	0.67	0.38	1.00	1.00	1.00	1.00	1.00	1.67	1.38	9.08	0.00	994.6	204.7	287.3
28.76	7.85	2.47	30.0	0.70	21.0	0.66	0.38	1.00	1.00	1.00	1.00	1.00	1.66	1.38	9.13	0.00	995.9	205.8	288.8
28.66	7.85	2.47	30.0	0.70	21.0	0.66	0.38	1.00	1.00	1.00	1.00	1.00	1.66	1.38	9.17	0.00	997.2	206.9	290.3
28.56	7.85	2.46	30.0	0.70	21.0	0.66	0.38	1.00	1.00	1.00	1.00	1.00	1.66	1.38	9.21	0.00	998.5	208.1	291.8
28.46	7.85	2.45	30.0	0.70	21.0	0.66	0.38	1.00	1.00	1.00	1.00	1.00	1.66	1.38	9.26	0.00	999.8	209.2	293.3
28.36	7.85	2.44	30.0	0.70	21.0	0.66	0.38	1.00	1.00	1.00	1.00	1.00	1.66	1.38	9.30	0.00	1001.1	210.3	294.8
28.26	7.85	2.44	30.0	0.70	21.0	0.65	0.37	1.00	1.00	1.00	1.00	1.00	1.65	1.37	9.34	0.00	1002.4	211.4	296.3
28.16	7.85	2.43	30.0	0.70	21.0	0.65	0.37	1.00	1.00	1.00	1.00	1.00	1.65	1.37	9.39	0.00	1003.7	212.5	297.8
28.06	7.85	2.42	30.0	0.70	21.0	0.65	0.37	1.00	1.00	1.00	1.00	1.00	1.65	1.37	9.43	0.00	1005.0	213.7	299.3
27.96	7.85	2.42	30.0	0.70	21.0	0.65	0.37	1.00	1.00	1.00	1.00	1.00	1.65	1.37	9.47	0.00	1006.3	214.8	300.8
27.86	7.85	2.41	30.0	0.70	21.0	0.65	0.37	1.00	1.00	1.00	1.00	1.00	1.65	1.37	9.51	0.00	1007.6	215.9	302.2

27.76	7.85	2.40	30.0	0.70	21.0	0.65	0.37	1.00	1.00	1.00	1.00	1.00	1.65	1.37	9.56	0.00	1008.9	217.0	303.7
27.66	7.85	2.39	30.0	0.70	21.0	0.64	0.37	1.00	1.00	1.00	1.00	1.00	1.64	1.37	9.60	0.00	1010.2	218.2	305.2
27.56	7.85	2.39	30.0	0.70	21.0	0.64	0.37	1.00	1.00	1.00	1.00	1.00	1.64	1.37	9.64	0.00	1011.5	219.3	306.7
27.45	7.85	2.38	30.0	0.70	21.0	0.64	0.37	1.00	1.00	1.00	1.00	1.00	1.64	1.37	9.69	0.00	1012.8	220.4	308.2
27.35	7.85	2.37	30.0	0.70	21.0	0.64	0.36	1.00	1.00	1.00	1.00	1.00	1.64	1.36	9.73	0.00	1014.1	221.5	309.6
27.25	7.85	2.37	30.0	0.70	21.0	0.64	0.36	1.00	1.00	1.00	1.00	1.00	1.64	1.36	9.77	0.00	1015.4	222.6	311.1
27.15	7.85	2.36	30.0	0.70	21.0	0.63	0.36	1.00	1.00	1.00	1.00	1.00	1.63	1.36	9.82	0.00	1016.7	223.7	312.6
27.05	7.85	2.35	30.0	0.70	21.0	0.63	0.36	1.00	1.00	1.00	1.00	1.00	1.63	1.36	9.86	0.00	1017.9	224.8	314.0
26.95	7.85	2.34	30.0	0.70	21.0	0.63	0.36	1.00	1.00	1.00	1.00	1.00	1.63	1.36	9.90	0.00	1019.2	226.0	315.5
26.85	7.85	2.34	30.0	0.70	21.0	0.63	0.36	1.00	1.00	1.00	1.00	1.00	1.63	1.36	9.95	0.00	1020.5	227.1	317.0
26.75	7.85	2.33	30.0	0.70	21.0	0.63	0.36	1.00	1.00	1.00	1.00	1.00	1.63	1.36	9.99	0.00	1021.8	228.2	318.4
26.65	7.85	2.32	30.0	0.70	21.0	0.62	0.36	1.00	1.00	1.00	1.00	1.00	1.62	1.36	10.03	0.00	1023.1	229.3	319.9
26.55	7.85	2.32	30.0	0.70	21.0	0.62	0.36	1.00	1.00	1.00	1.00	1.00	1.62	1.36	10.07	0.00	1024.3	230.4	321.4
26.45	7.85	2.31	30.0	0.70	21.0	0.62	0.35	1.00	1.00	1.00	1.00	1.00	1.62	1.35	10.12	0.00	1025.6	231.5	322.8
26.35	7.85	2.30	30.0	0.70	21.0	0.62	0.35	1.00	1.00	1.00	1.00	1.00	1.62	1.35	10.16	0.00	1026.9	232.6	324.3
26.25	7.85	2.29	30.0	0.70	21.0	0.62	0.35	1.00	1.00	1.00	1.00	1.00	1.62	1.35	10.20	0.00	1028.2	233.7	325.8
26.15	7.85	2.29	30.0	0.70	21.0	0.61	0.35	1.00	1.00	1.00	1.00	1.00	1.61	1.35	10.25	0.00	1029.4	234.8	327.2
26.05	7.85	2.28	30.0	0.70	21.0	0.61	0.35	1.00	1.00	1.00	1.00	1.00	1.61	1.35	10.29	0.00	1030.7	235.9	328.7
25.95	7.85	2.27	30.0	0.70	21.0	0.61	0.35	1.00	1.00	1.00	1.00	1.00	1.61	1.35	10.33	0.00	1032.0	237.0	330.1
25.85	7.85	2.27	30.0	0.70	21.0	0.61	0.35	1.00	1.00	1.00	1.00	1.00	1.61	1.35	10.38	0.00	1033.2	238.1	331.6
25.75	7.85	2.26	30.0	0.70	21.0	0.61	0.35	1.00	1.00	1.00	1.00	1.00	1.61	1.35	10.42	0.00	1034.5	239.2	333.0
25.65	7.85	2.25	30.0	0.70	21.0	0.60	0.35	1.00	1.00	1.00	1.00	1.00	1.60	1.35	10.46	0.00	1035.8	240.3	334.5
25.55	7.85	2.24	30.0	0.70	21.0	0.60	0.34	1.00	1.00	1.00	1.00	1.00	1.60	1.34	10.51	0.00	1037.0	241.4	335.9
25.45	7.85	2.24	30.0	0.70	21.0	0.60	0.34	1.00	1.00	1.00	1.00	1.00	1.60	1.34	10.55	0.00	1038.3	242.5	337.4
25.35	7.85	2.23	30.0	0.70	21.0	0.60	0.34	1.00	1.00	1.00	1.00	1.00	1.60	1.34	10.59	0.00	1039.5	243.6	338.8
25.25	7.85	2.22	30.0	0.70	21.0	0.60	0.34	1.00	1.00	1.00	1.00	1.00	1.60	1.34	10.63	0.00	1040.8	244.7	340.3
25.15	7.85	2.22	30.0	0.70	21.0	0.60	0.34	1.00	1.00	1.00	1.00	1.00	1.60	1.34	10.68	0.00	1042.0	245.8	341.7
25.05	7.85	2.21	30.0	0.70	21.0	0.59	0.34	1.00	1.00	1.00	1.00	1.00	1.59	1.34	10.72	0.00	1043.3	246.9	343.1
24.95	7.85	2.20	30.0	0.70	21.0	0.59	0.34	1.00	1.00	1.00	1.00	1.00	1.59	1.34	10.76	0.00	1044.6	248.0	344.6
24.85	7.85	2.19	30.0	0.70	21.0	0.59	0.34	1.00	1.00	1.00	1.00	1.00	1.59	1.34	10.81	0.00	1045.8	249.1	346.0
24.75	7.85	2.19	30.0	0.70	21.0	0.59	0.34	1.00	1.00	1.00	1.00	1.00	1.59	1.34	10.85	0.00	1047.1	250.2	347.5
24.65	7.85	2.18	30.0	0.70	21.0	0.59	0.33	1.00	1.00	1.00	1.00	1.00	1.59	1.33	10.89	0.00	1048.3	251.3	348.9
24.55	7.85	2.17	30.0	0.70	21.0	0.58	0.33	1.00	1.00	1.00	1.00	1.00	1.58	1.33	10.94	0.00	1049.5	252.4	350.3
24.45	7.85	2.17	0.0	0.70	0.0	0.00	0.00	1.50	1.00	1.00	-1.50	1.50	-1.50	1.50	10.98	-1.18	1048.4	253.6	350.3
24.35	7.85	2.16	0.0	0.70	0.0	0.00	0.00	1.50	1.00	1.00	-1.50	1.50	-1.50	1.50	11.02	-2.36	1047.2	254.9	350.3
24.25	7.85	2.15	0.0	0.70	0.0	0.00	0.00	1.50	1.00	1.00	-1.50	1.50	-1.50	1.50	11.06	-3.54	1046.0	256.1	350.3
24.15	7.85	2.14	0.0	0.70	0.0	0.00	0.00	1.50	1.00	1.00	-1.50	1.50	-1.50	1.50	11.11	-4.72	1044.8	257.3	350.3
24.05	7.85	2.14	0.0	0.70	0.0	0.00	0.00	1.50	1.00	1.00	-1.50	1.50	-1.50	1.50	11.15	-5.90	1043.6	258.5	350.3
23.95	7.85	2.13	0.0	0.70	0.0	0.00	0.00	1.50	1.00	1.00	-1.50	1.50	-1.50	1.50	11.19	-7.08	1042.5	259.7	350.3
23.85	7.85	2.12	0.0	0.70	0.0	0.00	0.00	1.50	1.00	1.00	-1.50	1.50	-1.50	1.50	11.24	-8.26	1041.3	261.0	350.3
23.75	7.85	2.12	0.0	0.70	0.0	0.00	0.00	1.50	1.00	1.00	-1.50	1.50	-1.50	1.50	11.28	-9.44	1040.1	262.2	350.3
23.65	7.85	2.11	0.0	0.70	0.0	0.00	0.00	1.50	1.00	1.00	-1.50	1.50	-1.50	1.50	11.32	-10.62	1038.9	263.4	350.3
23.55	7.85	2.10	0.0	0.70	0.0	0.00	0.00	1.50	1.00	1.00	-1.50	1.50	-1.50	1.50	11.37	-11.80	1037.7	264.6	350.3
23.45	7.85	2.10	0.0	0.70	0.0	0.00	0.00	1.50	1.00	1.00	-1.50	1.50	-1.50	1.50	11.41	-12.98	1036.6	265.9	350.3
23.35	7.85	2.09	0.0	0.70	0.0	0.00	0.00	1.50	1.00	1.00	-1.50	1.50	-1.50	1.50	11.45	-14.16	1035.4	267.1	350.3
23.25	7.85	2.08	0.0	0.70	0.0	0.00	0.00	1.50	1.00	1.00	-1.50	1.50	-1.50	1.50	11.50	-15.34	1034.2	268.3	350.3
23.15	7.85	2.07	0.0	0.70	0.0	0.00	0.00	1.50	1.00	1.00	-1.50	1.50	-1.50	1.50	11.54	-16.52	1033.0	269.5	350.3
23.05	7.85	2.07	0.0	0.70	0.0	0.00	0.00	1.50	1.00	1.00	-1.50	1.50	-1.50	1.50	11.58	-17.70	1031.8	270.7	350.3
22.95	7.85	2.06	0.0	0.70	0.0	0.00	0.00	1.50	1.00	1.00	-1.50	1.50	-1.50	1.50	11.62	-18.88	1030.7	272.0	350.3
22.85	7.85	2.05	0.0	0.70	0.0	0.00	0.00	1.50	1.00	1.00	-1.50	1.50	-1.50	1.50	11.67	-20.06	1029.5	273.2	350.3
22.75	7.85	2.05	0.0	0.70	0.0	0.00	0.00	1.50	1.00	1.00	-1.50	1.50	-1.50	1.50	11.71	-21.24	1028.3	274.4	350.3
22.65	7.85	2.04	0.0	0.70	0.0	0.00	0.00	1.50	1.00	1.00	-1.50	1.50	-1.50	1.50	11.75	-22.42	1027.1	275.6	350.3
22.55	7.85	2.03	0.0	0.70	0.0	0.00	0.00	1.50	1.00	1.00	-1.50	1.50	-1.50	1.50	11.80	-23.60	1025.9	276.9	350.3
22.44	7.85	2.02	0.0	0.70	0.0	0.00	0.00	1.50	1.00	1.00	-1.50	1.50	-1.50	1.50	11.84	-24.78	1024.8	278.1	350.3
22.34	7.85	2.02	0.0	0.70	0.0	0.00	0.00	1.50	1.00	1.00	-1.50	1.50	-1.50	1.50	11.88	-25.96	1023.6	279.3	350.3
22.24	7.85	2.01	0.0	0.70	0.0	0.00	0.00	1.50	1.00	1.00	-1.50	1.50	-1.50	1.50	11.93	-27.14	1022.4	280.5	350.3
22.14	7.85	2.00	0.0	0.70	0.0	0.00	0.00	1.50	1.00	1.00	-1.50	1.50	-1.50	1.50	11.97	-28.32	1021.2	281.8	350.3
22.04	7.85	2.00	0.0	0.70	0.0	0.00	0.00	1.50	1.00	1.00	-1.50	1.50	-1.50	1.50	12.01	-29.50	1020.0	283.0	350.3
21.94	7.85	1.99	34.0	0.70	23.8	0.61	0.35	0.00	1.00	1.00	0.00	0.00	0.61	0.35	12.06	-29.50	1020.5	283.3	350.8
21.84	7.85	1.98	34.0	0.70	23.8	0.61	0.35	0.00	1.00	1.00	0.00	0.00	0.61	0.35	12.10	-29.50	1021.0	283.6	351.3
21.74	7.85	1.98	34.0	0.70	23.8	0.61	0.35	0.00	1.00	1.00	0.00	0.00	0.61	0.35	12.14	-29.50	1021.5	283.9	351.7
21.64	7.85	1.97	34.0	0.70	23.8	0.61	0.35	0.00	1.00	1.00	0.00	0.00	0.61	0.35	12.18	-29.50	1022.0	284.3	352.2
21.54	7.85	1.97	34.0	0.70	23.8	0.61	0.35	0.00	1.00	1.00	0.00	0.00	0.61	0.35	12.23	-29.50	1022.5	284.6	352.7
21.44	7.85	1.96	34.0	0.70	23.8	0.61	0.35	0.00	1.00	1.00	0.00	0.00	0.61	0.35	12.27	-29.50	1022.9	284.9	353.2
21.34	7.85	1.96	34.0	0.70	23.8	0.60	0.34	0.00	1.00	1.00	0.00	0.00	0.60	0.34	12.31	-29.50	1023.4	285.2	353.6
21.24	7.85	1.95	34.0	0.70	23.8	0.60	0.34	0.00	1.00	1.00	0.00	0.00	0.60	0.34	12.36	-29.50	1023.9	285.5	354.1
21.14	7.85	1.94	34.0	0.70	23.8	0.60	0.34	0.00	1.00	1.00	0.00	0.00	0.60	0.34	12.40	-29.50	1024.3	285.8	354.5
21.04	7.85	1.94	34.0	0.70	23.8	0.60	0.34	0.00	1.00	1.00	0.00	0.00	0.60	0.34	12.44	-29.50	1024.8	286.1	355.0
20.94	7.85	1.93	34.0	0.70	23.8	0.60	0.34	0.00	1.00	1.00	0.00	0.00	0.60	0.34	12.49	-29.50	1025.3	286.4	355.5
20.84	7.85	1.93	34.0	0.70	23.8	0.59	0.34	0.00	1.00	1.00	0.00	0.00	0.59	0.34	12.53	-29.50	1025.8	286.8	355.9
20.74	7.85	1.92	34.0	0.70	23.8	0.59	0.34	0.00	1.00	1.00	0.00	0.00	0.59	0.34	12.57	-29.50	1026.2	287.1	356.4
20.64	7.85	1.91	34.0	0.70	23.8	0.59	0.34	0.00	1.00	1.00	0.00	0.00	0.59	0.34	12.61	-29.50	1026.7	287.4	356.8
20.54	7.85	1.91	34.0	0.70	23.8	0.59	0.34	0.00	1.00	1.00	0.00	0.00	0.59	0.34	12.66	-29.50	1027.1	287.7	357.3
20.44	7.85	1.90	34.0	0.70	23.8	0.59	0.34	0.00	1.00	1.00	0.00	0.00	0.59	0.34	12.70	-29.50	1027.6	288.0	357.7
20.34	7.85	1.90	34.0	0.70	23.8	0.59	0.33	0.00	1.00	1.00	0.00	0.00	0.59	0.33	12.74	-29.50	1028.1	288.3	358.2
20.24	7.85	1.89	34.0	0.70	23.8	0.58	0.33	0.00	1.00	1.00	0.00	0.00	0.58	0.33	12.79	-29.50	1028.5	288.6	358.7
20.14	7.85	1.88	34.0	0.70	23.8	0.58	0.33	0.00	1.00	1.00	0.00	0.00	0.58	0.33	12.83	-29.50	1029.0	288.9	359.1
20.04	7.85	1.88	34.0	0.70	23.8	0.58	0.33	0.00	1.00	1.00	0.00	0.00	0.58	0.33	12.87	-29.50	1029.4	289.2	359.5
19.94	7.85	1.87	34.0	0.70	23.8	0.58	0.33	0.00	1.00	1.00	0.00	0.00	0.58	0.33	12.92	-29.50	1029.9	289.5	360.0
19.84	7.85	1.87	34.0	0.70	23.8	0.58	0.33	0.00	1.00	1.00	0.00	0.00	0.58	0.33	12.96	-29.50	1030.4	289.8	360.4
19.74	7.85	1.86	34.0	0.70	23.8	0.57	0.33	0.00	1.00	1.00	0.00	0.00	0.57	0.33	13.00	-29.50	1030.8	290.1	360.9
19.64	7.85	1.86	34.0	0.70	23.8	0.57	0.33	0.00	1.00	1.00	0.00	0.00	0.57	0.33	13.05	-29.50	1031.3	290.4	361.3
19.54	7.85	1.85	34.0	0.70	23.8	0.57	0.33	0.00	1.00	1.00	0.00	0.00	0.57	0.33	13.09	-29.50	1031.7	290.7	361.8
19.44	7.85	1.84	34.0	0.70	23.8	0.57	0.33	0.00	1.00	1.00	0.00	0.00	0.57	0.33	13.13	-29.50	1032.2	291.0	362.2
19.34	7.85	1.84	34.0	0.70	23.8	0.57	0.32	0.00	1.00	1.00	0.00	0.00	0.57	0.32	13.17	-29.50	1032.6	291.3	362.6
19.24	7.85	1.83	34.0	0.70	23.8	0.57	0.32	0.00	1.00	1.00	0.00	0.00	0.57	0.32	13.22	-29.50	1033.0	291.6	363.1
19.14	7.85	1.83	34.0	0.70	23.8	0.56	0.32	0.00	1.00	1.00	0.00	0.00	0.56	0.32	13.26	-29.50	1033.5	291.9	363.5
19.04	7.85	1.82	34.0	0.70	23.8	0.56	0.32	0.00	1.00	1.00	0.00	0.00	0.56	0.32	13.30	-29.50	1033.9	292.2	364.0
18.94	7.85	1.81	34.0	0.70	23.8	0.56	0.32	0.00	1.00	1.00	0.00	0.00	0.56	0.32	13.35	-29.50	1034.4	292.5	364.4
18.84	7.85	1.81	34.0	0.70	23.8	0.56	0.32	0.00	1.00	1.00	0.00	0.00	0.56	0.32	13.39	-29.50	1034.8	292.8	364.8
18.74	7.85	1.80	34.0	0.70	23.8	0.56	0.32	0.00	1.00	1.00	0.00	0.00	0.56	0.32	13.43	-29.50	1035.2	293.1	365.2
18.64	7.85	1.80	34.0	0.70	23.8	0.55	0.32	0.00	1.00	1.00	0.00	0.00	0.55	0.32	13.48	-29.50	1035.7	293.4	365.7
18.54	7.85	1.79	34.0	0.70	23.8	0.55	0.32	0.00	1.00	1.00	0.00	0.00	0.55	0.32	13.52	-29.50	1036.1	293.7	366.1
18.44	7.85	1.78	34.0	0.70	23.8	0.55	0.31	0.00	1.00	1.00	0.00	0.00	0.55	0.31	13.56	-29.50	1036.5	294.0	366.5
18.34	7.85	1.78	34.0	0.70	23.8	0.55	0.31	0.00	1.00	1.00	0.00	0.00	0.55	0.31	13.60	-29.50	1037.0	294.2	366.9
18.24	7.85	1.77	34.0	0.70	23.8	0.55	0.31	0.00	1.00	1.00	0.00	0.00	0.55	0.31	13.65	-29.50	1037.4	294.5	367.4
18.14	7.85	1.77	34.0	0.70	23.8	0.55	0.31	0.00	1.00	1.00	0.00	0.00	0.55	0.31	13.69	-29.50	1037.8	294.8	367.8
18.04	7.85	1.76	34.0	0.70	23.8	0.54	0.31	0.00	1.00	1.00	0.00	0.00	0.54	0.31	13.73	-29.50	1038.3	295.1	368.2
17.94	7.85	1.76	34.0	0.70	23.8	0.54	0.31	0.00	1.00	1.00	0.00	0.00	0.54	0.31	13.78	-29.50	1038.7	295.4	368.6
17.84	7.85	1.75	34.0	0.70	23.8	0.54	0.31	0.00	1.00	1.00	0.00	0.00	0.54	0.31	13.82	-29.50	1039.1	295.7	369.0
17.74	7.85	1.74	34.0	0.70	23.8	0.54	0.31	0.00	1.00	1.00	0.00	0.00	0.54	0.31	13.86	-29.50	1039.5	296.0	369.5
17.64	7.85	1.74	34.0	0.70	23.8	0.54	0.31	0.00	1.00	1.00	0.00	0.00	0.54	0.31	13.91	-29.50	1040.0	296.3	369.9
17.54	7.85	1.73	34.0	0.70	23.8	0.53	0.31	0.00	1.00	1.00	0.00	0.00	0.53	0.31	13.95	-29.50	1040.4	296.5	370.3
17.43	7.85	1.73	34.0	0.70	23.8	0.53	0.30	0.00	1.00	1.00	0.00	0.00	0.53	0.30	13.99	-29.50	1040.8	296.8	370.7
17.33	7.85	1.72	34.0	0.70	23.8	0.53	0.30	0.00	1.00	1.00	0.00	0.00	0.53	0.30	14.04	-29.50	1041.2	297.1	371.1
17.23	7.85	1.71	34.0	0.70	23.8	0.53	0.30	0.00	1.00	1.00	0.00	0.00	0.53	0.30	14.08	-29.50	1041.6	297.4	371.5
17.13	7.85	1.71	34.0	0.70	23.8	0.53	0.30	0.00	1.00	1.00	0.00	0.00	0.53	0.30	14.12	-29.50	1042.1	297.7	371.9
17.03	7.85	1.70	34.0	0.70	23.8	0.53	0.30	0.00	1.00	1.00	0.00	0.00	0.53	0.30	14.16	-29.50	1042.5	297.9	372.3
16.93	7.85	1.70	34.0	0.70	23.8	0.52	0.30	0.00	1.00	1.00	0.00	0.00	0.52	0.30	14.21	-29.50	1042.9	298.2	372.7
16.83	7.85	1.69	34.0	0.70	23.8	0.52	0.30	0.00	1.00	1.00	0.00	0.00	0.52	0.30	14.25	-29.50	1043.3	298.5	373.1
16.73	7.85	1.68	34.0	0.70	23.8	0.52	0.30	0.00	1.00	1.00	0.00	0.00	0.52	0.30	14.29	-29.50	1043.7	298.8	373.5
16.63	7.85	1.68	34.0	0.70	23.8	0.52	0.30	0.00	1.00	1.00	0.00	0.00	0.52	0.30	14.34	-29.50	1044.1	299.1	373.9
16.53	7.85	1.67	34.0	0.70	23.8	0.52	0.30	0.00	1.00	1.00	0.00	0.00	0.52	0.30	14.38	-29.50	1044.5	299.3	374.3
16.43	7.85	1.67	34.0	0.70	23.8	0.51	0.29	0.00	1.00	1.00	0.00	0.00	0.51	0.29	14.42	-29.50	1044.9	299.6	374.7
16.33	7.85	1.66	34.0	0.70	23.8	0.51	0.29	0.00	1.00	1.00	0.00	0.00	0.51	0.29	14.47	-29.50	1045.3	299.9	375.1
16.23	7.85	1.66	34.0	0.70	23.8	0.51	0.29	0.00	1.00	1.00	0.00	0.00	0.51	0.29	14.51	-29.50	1045.7	300.1	375.5
16.13	7.85	1.65	34.0	0.70	23.8	0.51	0.29	0.00	1.00	1.00	0.00	0.00	0.51	0.29	14.55	-29.50	1046.1	300.4	375.9

16.03	7.85	1.64	34.0	0.70	23.8	0.51	0.29	0.00	1.00	1.00	0.00	0.00	0.51	0.29	14.60	-29.50	1046.5	300.7	376.3
15.93	7.85	1.64	34.0	0.70	23.8	0.51	0.29	0.00	1.00	1.00	0.00	0.00	0.51	0.29	14.64	-29.50	1046.9	301.0	376.7
15.83	7.85	1.63	34.0	0.70	23.8	0.50	0.29	0.00	1.00	1.00	0.00	0.00	0.50	0.29	14.68	-29.50	1047.3	301.2	377.1
15.73	7.85	1.63	34.0	0.70	23.8	0.50	0.29	0.00	1.00	1.00	0.00	0.00	0.50	0.29	14.72	-29.50	1047.7	301.5	377.5
15.63	7.85	1.62	34.0	0.70	23.8	0.50	0.29	0.00	1.00	1.00	0.00	0.00	0.50	0.29	14.77	-29.50	1048.1	301.8	377.9
15.53	7.85	1.61	34.0	0.70	23.8	0.50	0.28	0.00	1.00	1.00	0.00	0.00	0.50	0.28	14.81	-29.50	1048.5	302.0	378.3
15.43	7.85	1.61	34.0	0.70	23.8	0.50	0.28	0.00	1.00	1.00	0.00	0.00	0.50	0.28	14.85	-29.50	1048.9	302.3	378.6
15.33	7.85	1.60	34.0	0.70	23.8	0.49	0.28	0.00	1.00	1.00	0.00	0.00	0.49	0.28	14.90	-29.50	1049.3	302.6	379.0
15.23	7.85	1.60	34.0	0.70	23.8	0.49	0.28	0.00	1.00	1.00	0.00	0.00	0.49	0.28	14.94	-29.50	1049.7	302.8	379.4
15.13	7.85	1.59	34.0	0.70	23.8	0.49	0.28	0.00	1.00	1.00	0.00	0.00	0.49	0.28	14.98	-29.50	1050.0	303.1	379.8
15.03	7.85	1.58	34.0	0.70	23.8	0.49	0.28	0.00	1.00	1.00	0.00	0.00	0.49	0.28	15.03	-29.50	1050.4	303.4	380.2
14.93	7.85	1.58	34.0	0.70	23.8	0.49	0.28	0.00	1.00	1.00	0.00	0.00	0.49	0.28	15.07	-29.50	1050.8	303.6	380.5
14.83	7.85	1.57	34.0	0.70	23.8	0.49	0.28	0.00	1.00	1.00	0.00	0.00	0.49	0.28	15.11	-29.50	1051.2	303.9	380.9
14.73	7.85	1.57	34.0	0.70	23.8	0.48	0.28	0.00	1.00	1.00	0.00	0.00	0.48	0.28	15.15	-29.50	1051.6	304.1	381.3
14.63	7.85	1.56	34.0	0.70	23.8	0.48	0.28	0.00	1.00	1.00	0.00	0.00	0.48	0.28	15.20	-29.50	1052.0	304.4	381.7
14.53	7.85	1.56	34.0	0.70	23.8	0.48	0.27	0.00	1.00	1.00	0.00	0.00	0.48	0.27	15.24	-29.50	1052.3	304.7	382.0
14.43	7.85	1.55	34.0	0.70	23.8	0.48	0.27	0.00	1.00	1.00	0.00	0.00	0.48	0.27	15.28	-29.50	1052.7	304.9	382.4
14.33	7.85	1.54	34.0	0.70	23.8	0.48	0.27	0.00	1.00	1.00	0.00	0.00	0.48	0.27	15.33	-29.50	1053.1	305.2	382.8
14.23	7.85	1.54	34.0	0.70	23.8	0.47	0.27	0.00	1.00	1.00	0.00	0.00	0.47	0.27	15.37	-29.50	1053.5	305.4	383.1
14.13	7.85	1.53	34.0	0.70	23.8	0.47	0.27	0.00	1.00	1.00	0.00	0.00	0.47	0.27	15.41	-29.50	1053.8	305.7	383.5
14.03	7.85	1.53	34.0	0.70	23.8	0.47	0.27	0.00	1.00	1.00	0.00	0.00	0.47	0.27	15.46	-29.50	1054.2	305.9	383.9
13.93	7.85	1.52	34.0	0.70	23.8	0.47	0.27	0.00	1.00	1.00	0.00	0.00	0.47	0.27	15.50	-29.50	1054.6	306.2	384.2
13.83	7.85	1.51	34.0	0.70	23.8	0.47	0.27	0.00	1.00	1.00	0.00	0.00	0.47	0.27	15.54	-29.50	1054.9	306.4	384.6
13.73	7.85	1.51	34.0	0.70	23.8	0.47	0.27	0.00	1.00	1.00	0.00	0.00	0.47	0.27	15.59	-29.50	1055.3	306.7	384.9
13.63	7.85	1.50	34.0	0.70	23.8	0.46	0.27	0.00	1.00	1.00	0.00	0.00	0.46	0.27	15.63	-29.50	1055.7	307.0	385.3
13.53	7.85	1.50	34.0	0.70	23.8	0.46	0.26	0.00	1.00	1.00	0.00	0.00	0.46	0.26	15.67	-29.50	1056.0	307.2	385.7
13.43	7.85	1.49	34.0	0.70	23.8	0.46	0.26	0.00	1.00	1.00	0.00	0.00	0.46	0.26	15.71	-29.50	1056.4	307.5	386.0
13.33	7.85	1.48	34.0	0.70	23.8	0.46	0.26	0.00	1.00	1.00	0.00	0.00	0.46	0.26	15.76	-29.50	1056.8	307.7	386.4
13.23	7.85	1.48	34.0	0.70	23.8	0.46	0.26	0.00	1.00	1.00	0.00	0.00	0.46	0.26	15.80	-29.50	1057.1	307.9	386.7
13.13	7.85	1.47	34.0	0.70	23.8	0.45	0.26	0.00	1.00	1.00	0.00	0.00	0.45	0.26	15.84	-29.50	1057.5	308.2	387.1
13.03	7.85	1.47	34.0	0.70	23.8	0.45	0.26	0.00	1.00	1.00	0.00	0.00	0.45	0.26	15.89	-29.50	1057.8	308.4	387.4
12.93	7.85	1.45	34.0	0.70	23.8	0.45	0.26	0.00	1.00	1.00	0.00	0.00	0.45	0.26	15.96	-29.50	1058.2	308.7	387.8
12.83	7.85	1.44	34.0	0.70	23.8	0.45	0.25	0.00	1.00	1.00	0.00	0.00	0.45	0.25	16.03	-29.50	1058.5	309.0	388.1
12.73	7.85	1.43	34.0	0.70	23.8	0.44	0.25	0.00	1.00	1.00	0.00	0.00	0.44	0.25	16.11	-29.50	1058.9	309.3	388.4
12.63	7.85	1.42	34.0	0.70	23.8	0.44	0.25	0.00	1.00	1.00	0.00	0.00	0.44	0.25	16.18	-29.50	1059.2	309.5	388.8
12.53	7.85	1.41	34.0	0.70	23.8	0.43	0.25	0.00	1.00	1.00	0.00	0.00	0.43	0.25	16.26	-29.50	1059.6	309.8	389.1
12.42	7.85	1.39	34.0	0.70	23.8	0.43	0.25	0.00	1.00	1.00	0.00	0.00	0.43	0.25	16.33	-29.50	1059.9	310.1	389.5
12.32	7.85	1.38	34.0	0.70	23.8	0.43	0.24	0.00	1.00	1.00	0.00	0.00	0.43	0.24	16.40	-29.50	1060.2	310.3	389.8
12.22	7.85	1.37	34.0	0.70	23.8	0.42	0.24	0.00	1.00	1.00	0.00	0.00	0.42	0.24	16.48	-29.50	1060.6	310.6	390.1
12.12	7.85	1.36	34.0	0.70	23.8	0.42	0.24	0.00	1.00	1.00	0.00	0.00	0.42	0.24	16.55	-29.50	1060.9	310.9	390.4
12.02	7.85	1.35	34.0	0.70	23.8	0.42	0.24	0.00	1.00	1.00	0.00	0.00	0.42	0.24	16.62	-29.50	1061.2	311.1	390.8
11.92	7.85	1.34	0.0	0.70	0.0	0.00	0.00	0.75	1.00	1.00	-0.75	0.75	-0.75	0.75	16.70	-30.09	1060.6	311.8	390.8
11.82	7.85	1.33	0.0	0.70	0.0	0.00	0.00	0.75	1.00	1.00	-0.75	0.75	-0.75	0.75	16.77	-30.68	1060.1	312.5	390.8
11.72	7.85	1.31	0.0	0.70	0.0	0.00	0.00	0.75	1.00	1.00	-0.75	0.75	-0.75	0.75	16.85	-31.27	1059.5	313.1	390.8
11.62	7.85	1.30	0.0	0.70	0.0	0.00	0.00	0.75	1.00	1.00	-0.75	0.75	-0.75	0.75	16.92	-31.86	1058.9	313.8	390.8
11.52	7.85	1.29	0.0	0.70	0.0	0.00	0.00	0.75	1.00	1.00	-0.75	0.75	-0.75	0.75	16.99	-32.45	1058.3	314.4	390.8
11.42	7.85	1.28	0.0	0.70	0.0	0.00	0.00	0.75	1.00	1.00	-0.75	0.75	-0.75	0.75	17.07	-33.04	1057.7	315.1	390.8
11.32	7.85	1.27	0.0	0.70	0.0	0.00	0.00	0.75	1.00	1.00	-0.75	0.75	-0.75	0.75	17.14	-33.63	1057.1	315.8	390.8
11.22	7.85	1.26	0.0	0.70	0.0	0.00	0.00	0.75	1.00	1.00	-0.75	0.75	-0.75	0.75	17.21	-34.22	1056.5	316.4	390.8
11.12	7.85	1.25	0.0	0.70	0.0	0.00	0.00	0.75	1.00	1.00	-0.75	0.75	-0.75	0.75	17.29	-34.81	1055.9	317.1	390.8
11.02	7.85	1.24	0.0	0.70	0.0	0.00	0.00	0.75	1.00	1.00	-0.75	0.75	-0.75	0.75	17.36	-35.40	1055.3	317.8	390.8
10.92	7.85	1.23	0.0	0.70	0.0	0.00	0.00	0.75	1.00	1.00	-0.75	0.75	-0.75	0.75	17.44	-35.99	1054.7	318.4	390.8
10.82	7.85	1.22	0.0	0.70	0.0	0.00	0.00	0.75	1.00	1.00	-0.75	0.75	-0.75	0.75	17.51	-36.58	1054.2	319.1	390.8
10.72	7.85	1.21	0.0	0.70	0.0	0.00	0.00	0.75	1.00	1.00	-0.75	0.75	-0.75	0.75	17.58	-37.17	1053.6	319.8	390.8
10.62	7.85	1.20	0.0	0.70	0.0	0.00	0.00	0.75	1.00	1.00	-0.75	0.75	-0.75	0.75	17.66	-37.76	1053.0	320.4	390.8
10.52	7.85	1.18	0.0	0.70	0.0	0.00	0.00	0.75	1.00	1.00	-0.75	0.75	-0.75	0.75	17.73	-38.35	1052.4	321.1	390.8
10.42	7.85	1.17	0.0	0.70	0.0	0.00	0.00	0.75	1.00	1.00	-0.75	0.75	-0.75	0.75	17.80	-38.94	1051.8	321.7	390.8
10.32	7.85	1.16	0.0	0.70	0.0	0.00	0.00	0.75	1.00	1.00	-0.75	0.75	-0.75	0.75	17.88	-39.53	1051.2	322.4	390.8
10.22	7.85	1.15	0.0	0.70	0.0	0.00	0.00	0.75	1.00	1.00	-0.75	0.75	-0.75	0.75	17.95	-40.12	1050.6	323.1	390.8
10.12	7.85	1.14	0.0	0.70	0.0	0.00	0.00	0.75	1.00	1.00	-0.75	0.75	-0.75	0.75	18.03	-40.71	1050.0	323.7	390.8
10.02	7.85	1.13	0.0	0.70	0.0	0.00	0.00	0.75	1.00	1.00	-0.75	0.75	-0.75	0.75	18.10	-41.30	1049.4	324.4	390.8
9.92	7.85	1.12	0.0	0.70	0.0	0.00	0.00	0.75	1.00	1.00	-0.75	0.75	-0.75	0.75	18.17	-41.89	1048.8	325.1	390.8
9.82	7.85	1.11	0.0	0.70	0.0	0.00	0.00	0.75	1.00	1.00	-0.75	0.75	-0.75	0.75	18.25	-42.47	1048.3	325.7	390.8
9.72	7.85	1.10	0.0	0.70	0.0	0.00	0.00	0.75	1.00	1.00	-0.75	0.75	-0.75	0.75	18.32	-43.06	1047.7	326.4	390.8
9.62	7.85	1.09	0.0	0.70	0.0	0.00	0.00	0.75	1.00	1.00	-0.75	0.75	-0.75	0.75	18.39	-43.65	1047.1	327.1	390.8
9.52	7.85	1.08	0.0	0.70	0.0	0.00	0.00	0.75	1.00	1.00	-0.75	0.75	-0.75	0.75	18.47	-44.24	1046.5	327.7	390.8
9.42	7.85	1.07	0.0	0.70	0.0	0.00	0.00	0.75	1.00	1.00	-0.75	0.75	-0.75	0.75	18.54	-44.83	1045.9	328.4	390.8
9.32	7.85	1.05	0.0	0.70	0.0	0.00	0.00	0.75	1.00	1.00	-0.75	0.75	-0.75	0.75	18.62	-45.42	1045.3	329.0	390.8
9.22	7.85	1.04	0.0	0.70	0.0	0.00	0.00	0.75	1.00	1.00	-0.75	0.75	-0.75	0.75	18.69	-46.01	1044.7	329.7	390.8
9.12	7.85	1.03	0.0	0.70	0.0	0.00	0.00	0.75	1.00	1.00	-0.75	0.75	-0.75	0.75	18.76	-46.60	1044.1	330.4	390.8
9.02	7.85	1.02	0.0	0.70	0.0	0.00	0.00	0.75	1.00	1.00	-0.75	0.75	-0.75	0.75	18.84	-47.19	1043.5	331.0	390.8
8.92	7.85	1.01	0.0	0.70	0.0	0.00	0.00	0.75	1.00	1.00	-0.75	0.75	-0.75	0.75	18.91	-47.78	1042.9	331.7	390.8
8.82	7.85	1.00	0.0	0.70	0.0	0.00	0.00	0.75	1.00	1.00	-0.75	0.75	-0.75	0.75	18.98	-48.37	1042.4	332.4	390.8
8.72	7.85	0.99	0.0	0.70	0.0	0.00	0.00	0.75	1.00	1.00	-0.75	0.75	-0.75	0.75	19.06	-48.96	1041.8	333.0	390.8
8.62	7.85	0.98	0.0	0.70	0.0	0.00	0.00	0.75	1.00	1.00	-0.75	0.75	-0.75	0.75	19.13	-49.55	1041.2	333.7	390.8
8.52	7.85	0.97	0.0	0.70	0.0	0.00	0.00	0.75	1.00	1.00	-0.75	0.75	-0.75	0.75	19.21	-50.14	1040.6	334.4	390.8
8.42	7.85	0.96	0.0	0.70	0.0	0.00	0.00	0.75	1.00	1.00	-0.75	0.75	-0.75	0.75	19.28	-50.73	1040.0	335.0	390.8
8.32	7.85	0.95	0.0	0.70	0.0	0.00	0.00	0.75	1.00	1.00	-0.75	0.75	-0.75	0.75	19.35	-51.32	1039.4	335.7	390.8
8.22	7.85	0.94	0.0	0.70	0.0	0.00	0.00	0.75	1.00	1.00	-0.75	0.75	-0.75	0.75	19.43	-51.91	1038.8	336.3	390.8
8.12	7.85	0.92	0.0	0.70	0.0	0.00	0.00	0.75	1.00	1.00	-0.75	0.75	-0.75	0.75	19.50	-52.50	1038.2	337.0	390.8
8.02	7.85	0.91	0.0	0.70	0.0	0.00	0.00	0.75	1.00	1.00	-0.75	0.75	-0.75	0.75	19.57	-53.09	1037.6	337.7	390.8
7.92	7.85	0.90	0.0	0.70	0.0	0.00	0.00	0.75	1.00	1.00	-0.75	0.75	-0.75	0.75	19.65	-53.68	1037.0	338.3	390.8
7.82	7.85	0.89	0.0	0.70	0.0	0.00	0.00	0.75	1.00	1.00	-0.75	0.75	-0.75	0.75	19.72	-54.27	1036.5	339.0	390.8
7.72	7.85	0.88	0.0	0.70	0.0	0.00	0.00	0.75	1.00	1.00	-0.75	0.75	-0.75	0.75	19.80	-54.86	1035.9	339.7	390.8
7.62	7.85	0.87	0.0	0.70	0.0	0.00	0.00	0.75	1.00	1.00	-0.75	0.75	-0.75	0.75	19.87	-55.45	1035.3	340.3	390.8
7.52	7.85	0.86	0.0	0.70	0.0	0.00	0.00	0.75	1.00	1.00	-0.75	0.75	-0.75	0.75	19.94	-56.04	1034.7	341.0	390.8
7.41	7.85	0.85	0.0	0.70	0.0	0.00	0.00	0.75	1.00	1.00	-0.75	0.75	-0.75	0.75	20.02	-56.63	1034.1	341.7	390.8
7.31	7.85	0.84	0.0	0.70	0.0	0.00	0.00	0.75	1.00	1.00	-0.75	0.75	-0.75	0.75	20.09	-57.22	1033.5	342.3	390.8
7.21	7.85	0.83	0.0	0.70	0.0	0.00	0.00	0.75	1.00	1.00	-0.75	0.75	-0.75	0.75	20.16	-57.81	1032.9	343.0	390.8
7.11	7.85	0.82	0.0	0.70	0.0	0.00	0.00	0.75	1.00	1.00	-0.75	0.75	-0.75	0.75	20.24	-58.40	1032.3	343.6	390.8
7.01	7.85	0.81	0.0	0.70	0.0	0.00	0.00	0.75	1.00	1.00	-0.75	0.75	-0.75	0.75	20.31	-58.99	1031.7	344.3	390.8
6.91	7.85	0.79	0.0	0.70	0.0	0.00	0.00	0.75	1.00	1.00	-0.75	0.75	-0.75	0.75	20.39	-59.58	1031.1	345.0	390.8
6.81	7.85	0.78	0.0	0.70	0.0	0.00	0.00	0.75	1.00	1.00	-0.75	0.75	-0.75	0.75	20.46	-60.17	1030.6	345.6	390.8
6.71	7.85	0.77	0.0	0.70	0.0	0.00	0.00	0.75	1.00	1.00	-0.75	0.75	-0.75	0.75	20.53	-60.76	1030.0	346.3	390.8
6.61	7.85	0.76	0.0	0.70	0.0	0.00	0.00	0.75	1.00	1.00	-0.75	0.75	-0.75	0.75	20.61	-61.35	1029.4	347.0	390.8
6.51	7.85	0.75	0.0	0.70	0.0	0.00	0.00	0.75	1.00	1.00	-0.75	0.75	-0.75	0.75	20.68	-61.94	1028.8	347.6	390.8
6.41	7.85	0.74	0.0	0.70	0.0	0.00	0.00	0.75	1.00	1.00	-0.75	0.75	-0.75	0.75	20.75	-62.53	1028.2	348.3	390.8
6.31	7.85	0.73	0.0	0.70	0.0	0.00	0.00	0.75	1.00	1.00	-0.75	0.75	-0.75	0.75	20.83	-63.12	1027.6	349.0	390.8
6.21	7.85	0.72	0.0	0.70	0.0	0.00	0.00	0.75	1.00	1.00	-0.75	0.75	-0.75	0.75	20.90	-63.71	1027.0	349.6	390.8
6.11	7.85	0.71	0.0	0.70	0.0	0.00	0.00	0.75	1.00	1.00	-0.75	0.75	-0.75	0.75	20.98	-64.30	1026.4	350.3	390.8
6.01	7.85	0.70	0.0	0.70	0.0	0.00	0.00	0.75	1.00	1.00	-0.75	0.75	-0.75	0.75	21.05	-64.89	1025.8	350.9	390.8
5.91	7.85	0.69	0.0	0.70	0.0	0.00	0.00	0.75	1.00	1.00	-0.75	0.75	-0.75	0.75	21.12	-65.48	1025.2	351.6	390.8
5.81	7.85	0.68	0.0	0.70	0.0	0.00	0.00	0.75	1.00	1.00	-0.75	0.75	-0.75	0.75	21.20	-66.07	1024.7	352.3	390.8
5.71	7.85	0.66	0.0	0.70	0.0	0.00	0.00	0.75	1.00	1.00	-0.75	0.75	-0.75	0.75	21.27	-66.66	1024.1	352.9	390.8
5.61	7.85	0.65	0.0	0.70	0.0	0.00	0.00	0.75	1.00	1.00	-0.75	0.75	-0.75	0.75	21.34	-67.25	1023.5	353.6	390.8
5.51	7.85	0.64	0.0	0.70	0.0	0.00	0.00	0.75	1.00	1.00	-0.75	0.75	-0.75	0.75	21.42	-67.84	1022.9	354.3	390.8
5.41	7.85	0.63	0.0	0.70	0.0	0.00	0.00	0.75	1.00	1.00	-0.75	0.75	-0.75	0.75	21.49	-68.43	1022.3	354.9	390.8
5.31	7.85	0.62	0.0	0.70	0.0	0.00	0.00	0.75	1.00	1.00	-0.75	0.75	-0.75	0.75	21.57	-69.02	1021.7	355.6	390.8
5.21	7.85	0.61	0.0	0.70	0.0	0.00	0.00	0.75	1.00	1.00	-0.75	0.75	-0.75	0.75	21.64	-69.61	1021.1	356.3	390.8
5.11	7.85	0.60	0.0	0.70	0.0	0.00	0.00	0.75	1.00	1.00	-0.75	0.75	-0.75	0.75	21.71	-70.20	1020.5	356.9	390.8
5.01	7.85	0.59	0.0	0.70	0.0	0.00	0.00	0.75	1.00	1.00	-0.75	0.75	-0.75	0.75	21.79	-70.79	1019.9	357.6	390.8
4.91	7.85	0.58	0.0	0.70	0.0	0.00	0.00	0.75	1.00	1.00	-0.75	0.75	-0.75	0.75	21.86	-71.38	1019.3	358.2	390.8
4.81	7.85	0.57	0.0	0.70	0.0	0.00	0.00	0.75	1.00	1.00	-0.75	0.75	-0.75	0.75	21.93	-71.97	1018.8	358.9	390.8
4.71	7.85	0.56	0.0	0.70	0.0	0.00	0.00	0.75	1.00	1.00	-0.75	0.75	-0.75	0.75	22.01	-72.56	1018.2	359.6	390.8
4.61	7.85	0.55	0.0	0.70	0.0	0.00	0.00	0.75	1.00	1.00	-0.75	0.75	-0.75	0.75	22.08	-73.15	1017.6	360.2	390.8
4.51	7.85	0.54	0.0	0.70	0.0	0.00	0.00	0.75	1.00	1.00	-0.75	0.75	-0.75	0.75	22.16	-73.74	1017.0	360.9	390.8
4.41	7.85	0.52	0.0	0.70	0.0	0.00	0.00	0.75	1.00	1.00	0.00	0.00	0.00	0.00	22.23	-73.74	1017.0	361.0	390.8

4.31	7.85	0.51	0.0	0.70	0.0	0.00	0.00	0.75	1.00	1.00	0.00	0.00	0.00	0.00	22.30	-73.74	1017.0	361.0	390.8
4.21	7.85	0.50	0.0	0.70	0.0	0.00	0.00	0.75	1.00	1.00	0.00	0.00	0.00	0.00	22.38	-73.74	1017.0	361.1	390.8
4.11	7.85	0.49	0.0	0.70	0.0	0.00	0.00	0.75	1.00	1.00	0.00	0.00	0.00	0.00	22.45	-73.74	1017.0	361.2	390.8
4.01	7.85	0.48	0.0	0.70	0.0	0.00	0.00	0.75	1.00	1.00	0.00	0.00	0.00	0.00	22.52	-73.74	1017.0	361.3	390.8
3.91	7.85	0.47	0.0	0.70	0.0	0.00	0.00	0.75	1.00	1.00	0.00	0.00	0.00	0.00	22.60	-73.74	1017.0	361.3	390.8
3.81	7.85	0.46	0.0	0.70	0.0	0.00	0.00	0.75	1.00	1.00	0.00	0.00	0.00	0.00	22.67	-73.74	1017.0	361.4	390.8
3.71	7.85	0.45	0.0	0.70	0.0	0.00	0.00	0.75	1.00	1.00	0.00	0.00	0.00	0.00	22.75	-73.74	1017.0	361.5	390.8
3.61	7.85	0.44	0.0	0.70	0.0	0.00	0.00	0.75	1.00	1.00	0.00	0.00	0.00	0.00	22.82	-73.74	1017.0	361.6	390.8
3.51	7.85	0.43	0.0	0.70	0.0	0.00	0.00	0.75	1.00	1.00	0.00	0.00	0.00	0.00	22.89	-73.74	1017.0	361.6	390.8
3.41	7.85	0.41	0.0	0.70	0.0	0.00	0.00	0.50	1.00	1.00	0.00	0.00	0.00	0.00	22.97	-73.74	1017.0	361.7	390.8
3.31	7.85	0.40	0.0	0.70	0.0	0.00	0.00	0.50	1.00	1.00	0.00	0.00	0.00	0.00	23.04	-73.74	1017.0	361.8	390.8
3.21	7.85	0.39	0.0	0.70	0.0	0.00	0.00	0.50	1.00	1.00	0.00	0.00	0.00	0.00	23.11	-73.74	1017.0	361.9	390.8
3.11	7.85	0.38	0.0	0.70	0.0	0.00	0.00	0.50	1.00	1.00	0.00	0.00	0.00	0.00	23.19	-73.74	1017.0	361.9	390.8
3.01	7.85	0.37	0.0	0.70	0.0	0.00	0.00	0.50	1.00	1.00	0.00	0.00	0.00	0.00	23.26	-73.74	1017.0	362.0	390.8
2.91	7.85	0.35	0.0	0.70	0.0	0.00	0.00	0.50	1.00	1.00	0.00	0.00	0.00	0.00	23.34	-73.74	1017.0	362.1	390.8
2.81	7.85	0.34	0.0	0.70	0.0	0.00	0.00	0.50	1.00	1.00	0.00	0.00	0.00	0.00	23.41	-73.74	1017.0	362.2	390.8
2.71	7.85	0.33	0.0	0.70	0.0	0.00	0.00	0.50	1.00	1.00	0.00	0.00	0.00	0.00	23.48	-73.74	1017.0	362.2	390.8
2.61	7.85	0.32	0.0	0.70	0.0	0.00	0.00	0.50	1.00	1.00	0.00	0.00	0.00	0.00	23.56	-73.74	1017.0	362.3	390.8
2.51	7.85	0.31	0.0	0.70	0.0	0.00	0.00	0.50	1.00	1.00	0.00	0.00	0.00	0.00	23.63	-73.74	1017.0	362.4	390.8
2.40	7.85	0.29	0.0	0.70	0.0	0.00	0.00	0.50	1.00	1.00	0.00	0.00	0.00	0.00	23.70	-73.74	1017.0	362.4	390.8
2.30	7.85	0.28	0.0	0.70	0.0	0.00	0.00	0.50	1.00	1.00	0.00	0.00	0.00	0.00	23.78	-73.74	1017.0	362.5	390.8
2.20	7.85	0.27	0.0	0.70	0.0	0.00	0.00	0.50	1.00	1.00	0.00	0.00	0.00	0.00	23.85	-73.74	1017.0	362.6	390.8
2.10	7.85	0.26	0.0	0.70	0.0	0.00	0.00	0.50	1.00	1.00	0.00	0.00	0.00	0.00	23.93	-73.74	1017.0	362.7	390.8
2.00	7.85	0.25	0.0	0.70	0.0	0.00	0.00	0.50	1.00	1.00	0.00	0.00	0.00	0.00	24.00	-73.74	1017.0	362.7	390.8
1.90	7.85	0.23	0.0	0.70	0.0	0.00	0.00	0.50	1.00	1.00	0.00	0.00	0.00	0.00	24.07	-73.74	1017.0	362.8	390.8
1.80	7.85	0.22	0.0	0.70	0.0	0.00	0.00	0.50	1.00	1.00	0.00	0.00	0.00	0.00	24.15	-73.74	1017.0	362.9	390.8
1.70	7.85	0.21	0.0	0.70	0.0	0.00	0.00	0.50	1.00	1.00	0.00	0.00	0.00	0.00	24.22	-73.74	1017.0	363.0	390.8
1.60	7.85	0.20	0.0	0.70	0.0	0.00	0.00	0.50	1.00	1.00	0.00	0.00	0.00	0.00	24.29	-73.74	1017.0	363.0	390.8
1.50	7.85	0.19	0.0	0.70	0.0	0.00	0.00	0.50	1.00	1.00	0.00	0.00	0.00	0.00	24.37	-73.74	1017.0	363.1	390.8
1.40	7.85	0.17	0.0	0.70	0.0	0.00	0.00	0.50	1.00	1.00	0.00	0.00	0.00	0.00	24.44	-73.74	1017.0	363.2	390.8
1.30	7.85	0.16	0.0	0.70	0.0	0.00	0.00	0.50	1.00	1.00	0.00	0.00	0.00	0.00	24.52	-73.74	1017.0	363.3	390.8
1.20	7.85	0.15	0.0	0.70	0.0	0.00	0.00	0.50	1.00	1.00	0.00	0.00	0.00	0.00	24.59	-73.74	1017.0	363.3	390.8
1.10	7.85	0.14	0.0	0.70	0.0	0.00	0.00	0.50	1.00	1.00	0.00	0.00	0.00	0.00	24.66	-73.74	1017.0	363.4	390.8
1.00	7.85	0.13	0.0	0.70	0.0	0.00	0.00	0.50	1.00	1.00	0.00	0.00	0.00	0.00	24.74	-73.74	1017.0	363.5	390.8
0.90	7.85	0.11	0.0	0.70	0.0	0.00	0.00	0.50	1.00	1.00	0.00	0.00	0.00	0.00	24.81	-73.74	1017.0	363.6	390.8
0.80	7.85	0.10	0.0	0.70	0.0	0.00	0.00	0.50	1.00	1.00	0.00	0.00	0.00	0.00	24.88	-73.74	1017.0	363.6	390.8
0.70	7.85	0.09	0.0	0.70	0.0	0.00	0.00	0.50	1.00	1.00	0.00	0.00	0.00	0.00	24.96	-73.74	1017.0	363.7	390.8
0.60	7.85	0.08	0.0	0.70	0.0	0.00	0.00	0.50	1.00	1.00	0.00	0.00	0.00	0.00	25.03	-73.74	1017.0	363.8	390.8
0.50	7.85	0.07	0.0	0.70	0.0	0.00	0.00	0.50	1.00	1.00	0.00	0.00	0.00	0.00	25.11	-73.74	1017.0	363.8	390.8
0.40	7.85	0.05	0.0	0.70	0.0	0.00	0.00	0.50	1.00	1.00	0.00	0.00	0.00	0.00	25.18	-73.74	1017.0	363.9	390.8
0.30	7.85	0.04	0.0	0.70	0.0	0.00	0.00	0.50	1.00	1.00	0.00	0.00	0.00	0.00	25.25	-73.74	1017.0	364.0	390.8
0.20	7.85	0.03	0.0	0.70	0.0	0.00	0.00	0.50	1.00	1.00	0.00	0.00	0.00	0.00	25.33	-73.74	1017.0	364.1	390.8
0.10	7.85	0.02	0.0	0.70	0.0	0.00	0.00	0.50	1.00	1.00	0.00	0.00	0.00	0.00	25.40	-73.74	1017.0	364.1	390.8
0.00	7.85	0.01	0.0	0.70	0.0	0.00	0.00	0.50	1.00	1.00	0.00	0.00	0.00	0.00	25.47	-73.74	1017.0	364.2	390.8

SETTLEMENT based on Ultimate Loading by Vesic Method (1977):
Ztip=50.00 Btip= 2.50 Cp= 0.135 Cs= 0.222
Xpp=3.181-in Xps= 0.103-in Xtip= 3.284-in
Cp & Cs are average value at bearing stratum from pile tip extend to 4 Btip

At loading: Qtip=730.2-kp Qtop= 1017.0-kp Qside= 286.8-kp
Xtip=3.284-in Xtop= 3.555-in Xshaft= 0.271-in

LOAD - TOTAL SETTLEMENT RELATION (from t-z, and q-w curves):
Based on Vesic Method (1977)

Xtop -in	Xshaft -in	Xtip -in	Qtip -kp	Qside -kp	Qtotal -kp
0.0004	0.0004	0.0000	1.0	0.8	1.7
0.0292	0.0103	0.0189	11.5	49.7	61.2
0.0570	0.0192	0.0378	22.0	91.6	113.6
0.0839	0.0272	0.0567	32.5	127.2	159.8
0.1101	0.0344	0.0756	43.1	157.3	200.4
0.1355	0.0410	0.0945	53.6	182.6	236.2
0.1604	0.0470	0.1135	64.1	203.7	267.8
0.1848	0.0524	0.1324	74.6	221.1	295.7
0.2086	0.0574	0.1513	85.1	235.4	320.5
0.2322	0.0620	0.1702	95.5	247.1	342.6
0.2553	0.0662	0.1891	105.9	256.5	362.3
0.2782	0.0702	0.2080	116.2	264.0	380.2
0.3009	0.0740	0.2269	126.4	269.9	396.4
0.3233	0.0775	0.2458	136.6	274.5	411.2
0.3456	0.0809	0.2647	146.8	278.1	424.8
0.3677	0.0841	0.2836	156.8	280.8	437.6
0.3897	0.0872	0.3025	166.8	282.8	449.5
0.4116	0.0902	0.3215	176.6	284.2	460.9
0.4335	0.0931	0.3404	186.4	285.3	471.7
0.4552	0.0959	0.3593	196.1	286.0	482.1
0.4769	0.0987	0.3782	205.7	286.4	492.2
0.4985	0.1014	0.3971	215.2	286.7	501.9
0.5201	0.1041	0.4160	224.6	286.8	511.4
0.5416	0.1067	0.4349	233.9	286.8	520.7
0.5631	0.1093	0.4538	243.1	286.6	529.7
0.5846	0.1119	0.4727	252.2	286.4	538.6
0.6060	0.1143	0.4916	261.1	286.1	547.2
0.6273	0.1168	0.5105	269.9	285.7	555.7
0.6486	0.1192	0.5294	278.7	285.2	563.9
0.6699	0.1215	0.5484	287.3	284.7	571.9
0.6911	0.1239	0.5673	295.7	284.0	579.8
0.7123	0.1261	0.5862	304.1	283.3	587.4
0.7334	0.1283	0.6051	312.3	282.6	594.9
0.7545	0.1305	0.6240	320.4	281.7	602.2
0.7756	0.1327	0.6429	328.4	280.9	609.3
0.7966	0.1348	0.6618	336.3	280.1	616.4
0.8176	0.1369	0.6807	344.0	279.4	623.4
0.8385	0.1389	0.6996	351.6	278.8	630.4
0.8596	0.1411	0.7185	359.1	279.0	638.1
0.8806	0.1431	0.7374	366.5	278.7	645.2
0.9015	0.1451	0.7564	373.7	278.3	652.1
0.9223	0.1471	0.7753	380.9	278.0	658.8
0.9432	0.1490	0.7942	387.9	277.5	665.4
0.9640	0.1509	0.8131	394.7	277.1	671.8
0.9847	0.1527	0.8320	401.5	276.5	678.0
1.0054	0.1545	0.8509	408.1	275.9	684.1
1.0261	0.1563	0.8698	414.6	275.3	689.9
1.0467	0.1580	0.8887	421.0	274.6	695.7
1.0673	0.1596	0.9076	427.3	273.9	701.2
1.0878	0.1613	0.9265	433.5	273.2	706.6
1.1083	0.1629	0.9454	439.5	272.4	711.9
1.1288	0.1644	0.9644	445.5	271.6	717.0
1.1492	0.1660	0.9833	451.3	270.7	722.0
1.1696	0.1675	1.0022	457.0	269.9	726.9
1.1900	0.1689	1.0211	462.6	269.1	731.7
1.2104	0.1704	1.0400	468.1	268.2	736.3
1.2307	0.1718	1.0589	473.5	267.4	740.9
1.2510	0.1732	1.0778	478.8	266.6	745.4
1.2713	0.1746	1.0967	484.0	265.9	749.9

1.2915	0.1759	1.1156	489.1	265.2	754.3
1.3118	0.1772	1.1345	494.1	264.5	758.6
1.3320	0.1785	1.1534	499.0	263.9	762.9
1.3522	0.1798	1.1723	503.9	263.3	767.2
1.3723	0.1811	1.1913	508.6	262.8	771.4
1.3925	0.1823	1.2102	513.2	262.4	775.6
1.4126	0.1836	1.2291	517.8	262.0	779.8
1.4328	0.1848	1.2480	522.3	261.6	783.9
1.4529	0.1860	1.2669	526.7	261.2	787.9
1.4729	0.1871	1.2858	531.0	260.8	791.8
1.4930	0.1883	1.3047	535.2	260.4	795.7
1.5130	0.1894	1.3236	539.4	260.0	799.3
1.5330	0.1905	1.3425	543.5	259.4	802.8
1.5529	0.1915	1.3614	547.5	258.6	806.1
1.5728	0.1925	1.3803	551.4	257.7	809.1
1.5926	0.1934	1.3993	555.3	256.5	811.7
1.6124	0.1942	1.4182	559.1	254.9	814.0
1.6325	0.1954	1.4371	562.9	255.9	818.8
1.6524	0.1965	1.4560	566.5	255.6	822.2
1.6723	0.1974	1.4749	570.2	255.4	825.5
1.6922	0.1984	1.4938	573.7	255.1	828.8
1.7121	0.1994	1.5127	577.2	254.8	832.1
1.7319	0.2003	1.5316	580.7	254.6	835.3
1.7518	0.2012	1.5505	584.1	254.3	838.4
1.7716	0.2021	1.5694	587.5	254.0	841.5
1.7914	0.2030	1.5883	590.8	253.8	844.5
1.8112	0.2039	1.6073	594.0	253.5	847.5
1.8310	0.2048	1.6262	597.2	253.2	850.5
1.8507	0.2057	1.6451	600.4	253.0	853.4
1.8705	0.2065	1.6640	603.5	252.7	856.2
1.8902	0.2073	1.6829	606.6	252.4	859.0
1.9100	0.2082	1.7018	609.7	252.2	861.8
1.9297	0.2090	1.7207	612.7	251.9	864.6
1.9494	0.2098	1.7396	615.6	251.6	867.3
1.9691	0.2106	1.7585	618.6	251.4	869.9
1.9888	0.2113	1.7774	621.5	251.1	872.5
2.3573	0.2244	2.1329	670.1	246.0	916.2
2.7229	0.2345	2.4884	708.2	241.0	949.2
3.0839	0.2400	2.8439	730.2	236.0	966.2
3.4378	0.2384	3.1994	727.2	230.9	958.1
3.7833	0.2284	3.5549	694.4	225.9	920.3

At Qwork= 378.00-kp Settlement= 0.27542-in
At Qwork= 378.00-kp Secant Stiffness Kqx= 1372.43-kp/-in
At Xallow= 1.00-in Q= 682.48-kp
Note: If the program cannot find a result or the result exceeds the upper limit. The result will be displayed as 99999.

SUMMARY:

Total Ultimate Capacity (Down)= 1016.985-kp Total Ultimate Capacity (Up)= 364.219-kp
Total Allowable Capacity (Down)= 386.791-kp Total Allowable Capacity (Up)= 194.846-kp

Weight above Ground= 0.00 Total Pile Weight= 25.47-kp *Soil Weight is not included
Side Resistance (Down)= 286.777-kp Side Resistance (Up)= 338.745-kp
Tip Resistance (Down)= 730.208-kp Tip Resistance (Up)= 0.000-kp
Negative Friction, Qneg= -73.741-kp, which has been subtracted from Total Ultimate Capacity (Down)
Negative friction does not affect Total Uplift Ultimate Capacity (Up)

OK! Qallow > Q * Vertical Load, Q= 378.0 -kp

FACTOR OF SAFETY:

FSside	FStip	FSup	FSweight
2.0	3.0	2.0	1.0

* FStorsion = FSside

Notes:
* Settlement in the program is Elastic Settlement only. Consolidation Settlement is not calculated!
Length - Pile length, distance from pile top to tip (not from ground surface)
Width or D - Width of pile shaft (pile diameter)
Ds and Dl - Short Side and Long Side of Footing
Area - Section area of pile shaft or tip area of pile
Sv - Vertical stress in soils (It may be limited based on critical depth, Z_lim or Z/D
qult - Ultimate tip resistance (pressure)
Qtip_dw - Ultimate downward tip resistance (Force or Capacity)
Qtip_up - Ultimate uplift tip resistance for belled pile or uplift plate (Force or Capacity)
Torsion - Ultimate torsion resistance for single pile (Capacity)
dz - Small Segment of Depth for Calculation
Zs - Soil Depth, Depth from ground surface
Zp - Pile Depth, Depth from pile top
Prem - Primer of pile shaft
Phi - Soil internal friction angle (between soils)
Kf - Friction factor to convert Phi to Delta
Delta - Ski friction between soil and pile (function of Phi. It is different from Phi)
f_dw - Downward Resistance between soil and pile from Delta
f_up - Uplift Resistance between soil and pile from Delta
C - Soil cohesion (between soils)
Ca - Adhesion between soil and pile (function of C. It is different from C) Ca=KaKcC
Ka - Adhesion ratio, C/Ca
Kc - Adhesion factor defended by users
Ca_dw - Downward adhesion between pile and soil
Ca_up - Uplift adhesion between pile and soil
Sf_dw - Downward side resistance (sum of friction and adhesion, f_dw + Ca_dw)
Sf_up - Uplift side resistance (sum of friction and adhesion, f_up + Ca_up)
Torsion side resistance = (Sf_dw+Sf_up)/2 * pile diameter/2
Weight - Weight of Pile shaft
Qneg - negative friction Resistance
Qside - Ultimate side resistance (Qside_dw or Qside_up)
Qtip - Ultimate tip resistance (Qtip_dw or Qtip_up for uplift plate)
Q_dw - Ultimate downward capacity (Qtip + Qside_dw)
Q_up - Ultimate uplift capacity (Weight + Qside_up)
E - Elastic modules
Xs - Settlement due to axial deformation of pile shaft
Xpp - Settlement due to point load from pile tip
Xps- Settlement due to load from pile shaft
Xtop - Total settlement, Xs + Xpp + Xps
Xtip - Tip settlement, Xpp + Xps
Xshaft - Shaft deformation, Xs
Xallow - Allowable settlement specified by users
Qwork - Vertical working load applied to pile
Qallow - Vertical allowable load, Qult/F.S.

VERTICAL ANALYSIS

Figure 1

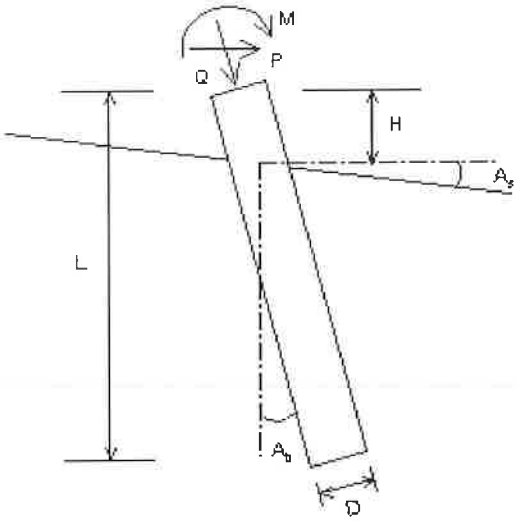

Drilled Shaft (dia >24 in. or 61 cm)

Loads:
Load Factor for Vertical Loads= 1.0
Load Factor for Lateral Loads= 1.0
Loads Supported by Pile Cap= 0 %
Shear Condition: Static

(with Load Factor)
Vertical Load, Q= 474.0 -kp

Profile:
Pile Length, L= 47.0 -ft
Top Height, H= 0 -ft
Slope Angle, As= 0
Batter Angle, Ab= 0

* Zero Friction *
Zero Friction Start: 0 -ft End: 4.5 -ft
* Negative Friction *
Negative Friction Start: 4.5 -ft End: 12 -ft with Factor: 1
Negative Friction Start: 22 -ft End: 24.5 -ft with Factor: 1

Soil Data:

Depth -ft	Gamma -lb/f3	Phi	C -kp/f2	K -lb/i3	e50 or Dr %	Nspt
0	120.0	0.0	0.500	272.0	0.92	9
3.5	108.0	0.0	0.750	276.5	0.92	9
12	120.0	34	0.00	90.6	49.45	17
13	58.7	34	0.00	64.1	52.46	19
22	70.6	0.0	1.500	921.9	0.54	22
24.5	71.1	30	1.000	1031.5	0.51	24
42	74.5	37	0.00	197.2	95.94	60

Pile Data:

Depth -ft	Width -in	Area -in2	Per. -in	I -in4	E -kp/i2	Weight -kp/f
0.0	36	1017.9	113.1	82448.0	3000	1.060
47.0						

Vertical Capacity:
Weight above Ground= 0.00 Total Weight= 34.86-kp *Soil Weight is not included
Side Resistance (Down)= 305.397-kp Side Resistance (Up)= 385.092-kp
Tip Resistance (Down)= 994.023-kp Tip Resistance (Up)= 0.000-kp
Total Ultimate Capacity (Down) Qult= 1299.420-kp Total Ultimate Capacity (Up)= 419.956-kp
Total Allowable Capacity (Down) Qallow= 484.040-kp Total Allowable Capacity (Up) Qallow= 227.410-kp
OK! Qallow > Q

Settlement Calculation:
At Q= 474.00-kp Settlement= 0.34472-in
At Xallow= 1.00-in Q= 803.35651-kp

Note: If the program cannot find a result or the result exceeds the upper limit. The result will be displayed as 99999.

ALLOWABLE CAPACITY vs FOUNDATION DEPTH

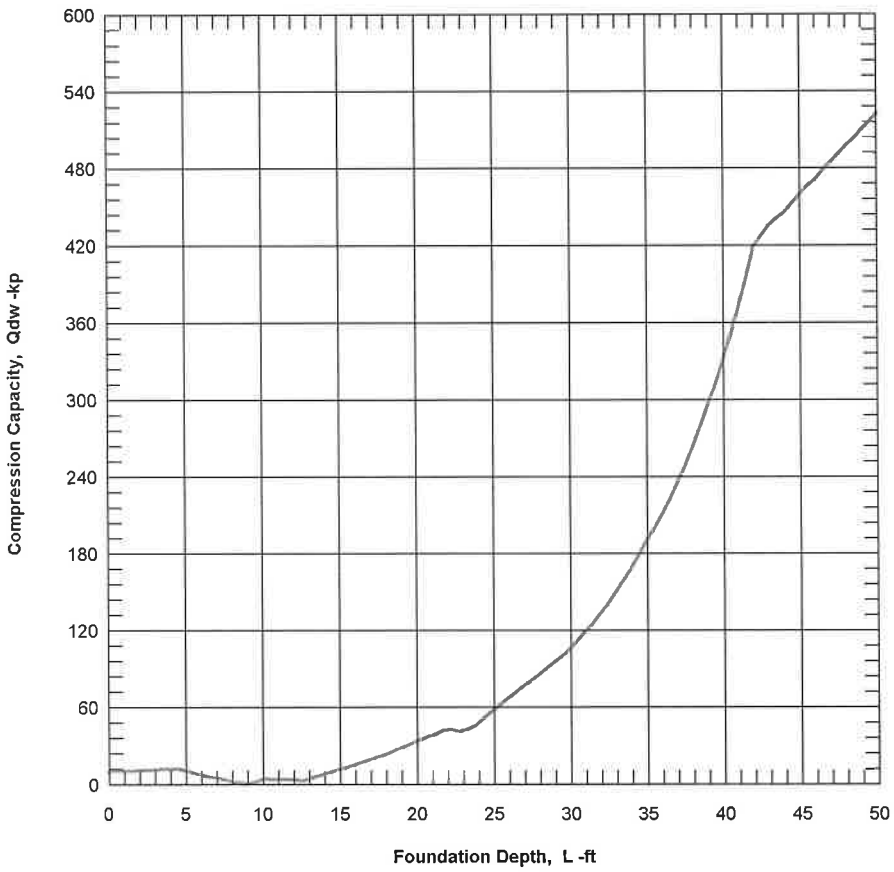

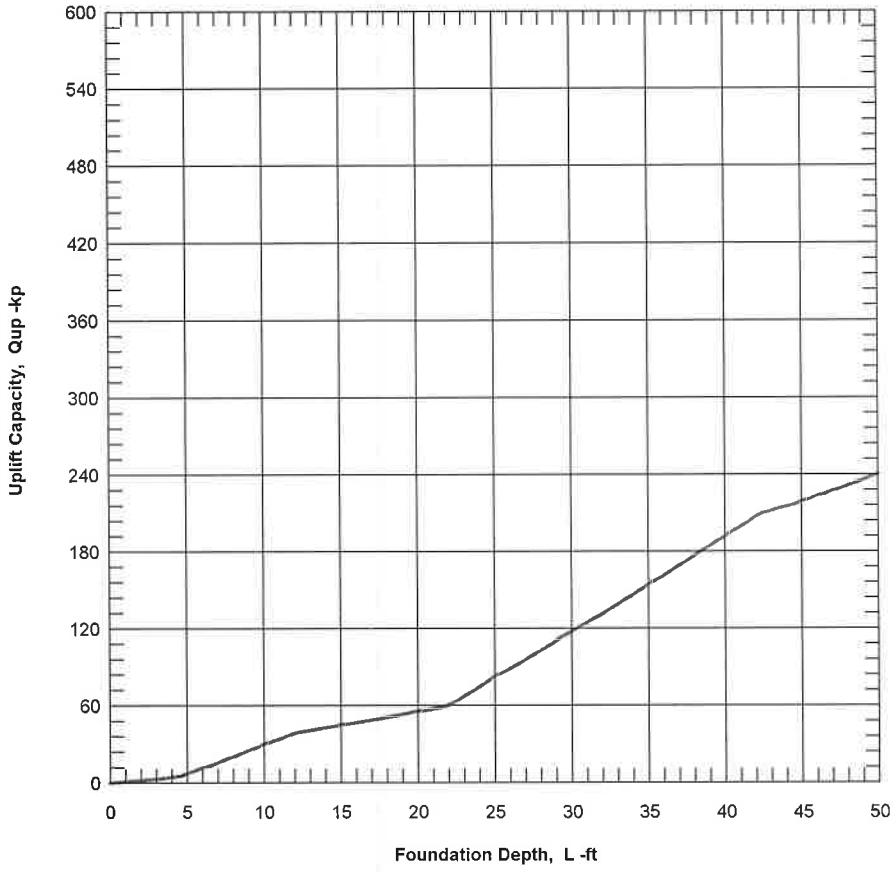

CivilTech Software

16G136 - 36-in-dia Drilled Pier
47-ft-deep; Using B-2 data

Figure 1

```
*************************************************************
                    ALLPILE 7
       VERTICAL ANALYSIS DETAILED OUTPUT
        Copyright by CivilTech Software
                www.civiltech.com
*************************************************************
Licensed to
Date: 7/8/2019  File: P:\Geotechnical\2016 Geotechnical\16G136 Alston 2 CI Bldgs Long Beach\Deep Foundation Design\Apr 28 2016\Boring B-2\36india_47ftdeep_drilled_01.alp                1.0

Title 1: 16G136 - 36-in-dia Drilled Pier
Title 2: 47-ft-deep; Using B-2 data

ALLPILE INPUT DATA:
**_____________________________________________________**

* Pile Type Page *
Unit: English
Diameter more than 24in (61cm).  For bell section, select "Belled" in Diameter Variation of Pile Section Screen. Recommendation: 2 to 4 in Item 3 of Page F.
Pile Type: Drilled Shaft (dia >24 in. or 61 cm)

* Pile Profile *
Foundation Depth: 47.0 -ft
Top Height: 0 -ft
Slope Angle: 0
Pile Angle: 0

* Pile Properties *
Zs      Width   Area    Perim.     I      E     Weight  Mix     Out     In      Other.  Type
-ft     -in     -in2    -in     -in4    -kp/i2  -kp/f   %       Side    Side    Par.
_____________________________________________________________________________________________
0.0     36      1017.9  113.1   82448.0 3000    1.060   0.0     4       4       0       Concrete (smooth)
47.0                                                                                    Pile Tip
Note:  Mix = % of Inside material/Outside material

Group Type: 0
Top Type: 1

Water Table: 13 -ft
Ground Elevation: 0 -ft

* Soil Properties *
Zs      Gamma   Phi     C       K       E50/Dr  Nspt    Type    Soil
-ft     -lb/f3  o       -kp/f2  -lb/i3   - %
0.0     120.0   0.0     0.500   272.0   0.92    9       3       Fill
3.5     108.0   0.0     0.750   276.5   0.92    9       1       Alluvium
12.0    120.0   34      0.00    90.6    49.45   17      4       Alluvium
13.0    58.7    34      0.00    64.1    52.46   19      4       Alluvium
22.0    70.6    0.0     1.500   921.9   0.54    22      2       Alluvium
24.5    71.1    30      1.000   1031.5  0.51    24      3       Alluvium
42.0    74.5    37      0.00    197.2   95.94   60      4       Alluvium

Surcharge Pressure on ground: 0 -kp/f2

* Zero Friction *
Zero Friction Start: 0 -ft      End: 4.5 -ft

* Negative Friction *
Negative Friction Start: 4.5 -ft        End: 12 -ft     with Factor: 1
Negative Friction Start: 22 -ft End: 24.5 -ft   with Factor: 1

ALLPILE ANALYSIS AND RESULTS:
**_____________________________________________________**

Pile Profile and Loading:
        Piletype: Drilled Shaft (dia >24 in. or 61 cm)
        Pile Length, L= 47.0 -ft
        Top Height, H= 0 -ft
        Slope Angle, As= 0
        Batter Angle, Ab= 0.00

        *To consider the influence of different soils below the pile tip, bearing stratum is defined
        from pile tip extending to 4 Diameter of pile, which is 12.0-ft (Input Page F, Item 3)

Single Pile, Vertical Analysis:
        Vertical Load with Load factor, Q= 474.0 -kp
        Vertical Load with Load factor and Pile Cap, Q= 474.0 -kp
          Load Factor for Vertical Loads= 1.0
          Vertical Loads Supported by Pile Cap: 0 %
          Kdown= 0.7      Kup= 0.4        Ka= 1.00


From Ztip=47.0 to 59.0-ft  Average Properties: Es= 959.90-kp/f2  C=0.00-kp/f2  Friction=37.00 Cp=0.14  Ksand=1.00
Limits of Max. tip resistance, q_lim= N/A
Batter Angle, Ab= 0.00    Batter Factor, Kbat= 1.00
Qtip_dw=994.0-kp  based on qult=140.6-kp/f2  and Base Area=7.1-ft2
Qtip_up=0.0-kp  and Base Area=0.0-ft2


TIP RESISTANCE (Down) CALCULATION:
Tip Depth= 47.0-ft Critical Depth Ratio Z/D= 20 Critical Depth= 60.0-ft
Equivalent Width of Tip= 3.00-ft,   Tip Area= 7.07-ft2   Tip Diameter= 3.00-ft
Bearing stratum from pile tip extending to 4 Diameter of pile. Bearing stratum= 12.00-ft
Btip: width at pile tip= 3.00-ft (For group pile, it is equivalent width).
Phi & C are average value in bearing stratum.
Batter Angle= 0.00,    Batter Factor for Tip and Side= 1.00

Ztip    Z/D     Z_lim   q_lim   Width   Area'   Phi     C       Nq      Nc      Sv      qult    Qtip_dw
-ft             -ft     -kp/f2  -ft     -ft2    - o     -kp/f2                  -kp/f2  -kp/f2  -kp
_____________________________________________________________________________________________
47.0    20.0    60.0    N/A     3.00    7.07    37.0    0.00    37.1    9.0     3.8     140.6   994.0

 Ztip - Depth of pile tip from ground surface (Zs)
 D - Pile average diameter (below ground) for calculation of critical depth.  D=3.00-ft
 Z/D - Critical depth (for tip resistances) as ratio of depth/diameter. Vertical stress will be constant below critical depth
 Z_lim - Critical depth, calculated from Z/D (for tip resistances)
 q_lim -  Limit of Maximum tip resistance
 Btip: width or diameter at pile tip
 Bearing stratum: A stratum from  pile tip extending to some depth. Average soil properties in the stratum are used for bearing calculation


SIDE RESISTANCE (Uplift & Down) CALCULATION:
D       Z/D     Z_lim   Sf_lim  K_dw    K_up    dz
-ft             -ft     -kp/f2                  -ft
_____________________________________________________
3.00    20.0    60.00   N/A     0.7     0.4     0.094

 D - Pile average diameter for calculation of critical depth
```

Z/D - Critical depth (for side resistances) as ratio of depth/diameter. Vertical stress will be constant below critical depth
Z_lim - Critical depth calculated from Z/D (for side resistances)
Sf_lim - Limit of Maximum side resistance

Users Setting: Ka=1, which is constant. Ca=KcKaC=KcC

SIDE RESISTANCE (Up & Down) CALCULATION vs DEPTH:
Calculation is based on segment dZ= 0.09

Zs -ft	Prem -ft	Sv -kp/f2	Phi - o	Kf(<2) Delta	Delta - o	f_dw -kp/f2	f_up -kp/f2	C -kp/f2	Ka	Kc(<2) Ca	Ca_dw -kp/f2	Ca_up -kp/f2	Sf_dw -kp/f2	Sf_up -kp/f2	Weight -kp	Qneg -kp	Q_dw -kp	Q_up -kp	Torsion -kp-f
47.00	9.43	3.79	37.0	0.70	25.9	1.29	0.74	0.00	1.00	1.00	0.00	0.00	0.00	0.00	0.00	0.00	994.0	0.0	0.0
46.91	9.43	3.78	37.0	0.70	25.9	1.29	0.73	0.00	1.00	1.00	0.00	0.00	1.29	0.73	0.06	0.00	995.2	0.7	1.3
46.81	9.43	3.78	37.0	0.70	25.9	1.28	0.73	0.00	1.00	1.00	0.00	0.00	1.28	0.73	0.12	0.00	996.3	1.4	2.7
46.72	9.43	3.77	37.0	0.70	25.9	1.28	0.73	0.00	1.00	1.00	0.00	0.00	1.28	0.73	0.17	0.00	997.4	2.1	4.0
46.62	9.43	3.76	37.0	0.70	25.9	1.28	0.73	0.00	1.00	1.00	0.00	0.00	1.28	0.73	0.23	0.00	998.6	2.8	5.4
46.53	9.43	3.76	37.0	0.70	25.9	1.28	0.73	0.00	1.00	1.00	0.00	0.00	1.28	0.73	0.29	0.00	999.7	3.5	6.7
46.43	9.43	3.75	37.0	0.70	25.9	1.27	0.73	0.00	1.00	1.00	0.00	0.00	1.27	0.73	0.35	0.00	1000.8	4.2	8.0
46.34	9.43	3.74	37.0	0.70	25.9	1.27	0.73	0.00	1.00	1.00	0.00	0.00	1.27	0.73	0.41	0.00	1002.0	4.9	9.4
46.25	9.43	3.73	37.0	0.70	25.9	1.27	0.73	0.00	1.00	1.00	0.00	0.00	1.27	0.73	0.47	0.00	1003.1	5.7	10.7
46.15	9.43	3.73	37.0	0.70	25.9	1.27	0.72	0.00	1.00	1.00	0.00	0.00	1.27	0.72	0.52	0.00	1004.2	6.4	12.0
46.06	9.43	3.72	37.0	0.70	25.9	1.26	0.72	0.00	1.00	1.00	0.00	0.00	1.26	0.72	0.58	0.00	1005.3	7.1	13.3
45.96	9.43	3.71	37.0	0.70	25.9	1.26	0.72	0.00	1.00	1.00	0.00	0.00	1.26	0.72	0.64	0.00	1006.5	7.8	14.7
45.87	9.43	3.71	37.0	0.70	25.9	1.26	0.72	0.00	1.00	1.00	0.00	0.00	1.26	0.72	0.70	0.00	1007.6	8.4	16.0
45.78	9.43	3.70	37.0	0.70	25.9	1.26	0.72	0.00	1.00	1.00	0.00	0.00	1.26	0.72	0.76	0.00	1008.7	9.1	17.3
45.68	9.43	3.69	37.0	0.70	25.9	1.26	0.72	0.00	1.00	1.00	0.00	0.00	1.26	0.72	0.82	0.00	1009.8	9.8	18.6
45.59	9.43	3.69	37.0	0.70	25.9	1.25	0.72	0.00	1.00	1.00	0.00	0.00	1.25	0.72	0.87	0.00	1010.9	10.5	19.9
45.49	9.43	3.68	37.0	0.70	25.9	1.25	0.71	0.00	1.00	1.00	0.00	0.00	1.25	0.71	0.93	0.00	1012.0	11.2	21.2
45.40	9.43	3.67	37.0	0.70	25.9	1.25	0.71	0.00	1.00	1.00	0.00	0.00	1.25	0.71	0.99	0.00	1013.1	11.9	22.5
45.30	9.43	3.66	37.0	0.70	25.9	1.25	0.71	0.00	1.00	1.00	0.00	0.00	1.25	0.71	1.05	0.00	1014.2	12.6	23.8
45.21	9.43	3.66	37.0	0.70	25.9	1.24	0.71	0.00	1.00	1.00	0.00	0.00	1.24	0.71	1.11	0.00	1015.4	13.3	25.1
45.12	9.43	3.65	37.0	0.70	25.9	1.24	0.71	0.00	1.00	1.00	0.00	0.00	1.24	0.71	1.17	0.00	1016.5	14.0	26.4
45.02	9.43	3.64	37.0	0.70	25.9	1.24	0.71	0.00	1.00	1.00	0.00	0.00	1.24	0.71	1.22	0.00	1017.6	14.7	27.7
44.93	9.43	3.64	37.0	0.70	25.9	1.24	0.71	0.00	1.00	1.00	0.00	0.00	1.24	0.71	1.28	0.00	1018.6	15.4	29.0
44.83	9.43	3.63	37.0	0.70	25.9	1.23	0.70	0.00	1.00	1.00	0.00	0.00	1.23	0.70	1.34	0.00	1019.7	16.0	30.3
44.74	9.43	3.62	37.0	0.70	25.9	1.23	0.70	0.00	1.00	1.00	0.00	0.00	1.23	0.70	1.40	0.00	1020.8	16.7	31.6
44.65	9.43	3.62	37.0	0.70	25.9	1.23	0.70	0.00	1.00	1.00	0.00	0.00	1.23	0.70	1.46	0.00	1021.9	17.4	32.9
44.55	9.43	3.61	37.0	0.70	25.9	1.23	0.70	0.00	1.00	1.00	0.00	0.00	1.23	0.70	1.52	0.00	1023.0	18.1	34.2
44.46	9.43	3.60	37.0	0.70	25.9	1.22	0.70	0.00	1.00	1.00	0.00	0.00	1.22	0.70	1.57	0.00	1024.1	18.8	35.5
44.36	9.43	3.59	37.0	0.70	25.9	1.22	0.70	0.00	1.00	1.00	0.00	0.00	1.22	0.70	1.63	0.00	1025.2	19.4	36.7
44.27	9.43	3.59	37.0	0.70	25.9	1.22	0.70	0.00	1.00	1.00	0.00	0.00	1.22	0.70	1.69	0.00	1026.3	20.1	38.0
44.17	9.43	3.58	37.0	0.70	25.9	1.22	0.70	0.00	1.00	1.00	0.00	0.00	1.22	0.70	1.75	0.00	1027.4	20.8	39.3
44.08	9.43	3.57	37.0	0.70	25.9	1.21	0.69	0.00	1.00	1.00	0.00	0.00	1.21	0.69	1.81	0.00	1028.4	21.5	40.6
43.99	9.43	3.57	37.0	0.70	25.9	1.21	0.69	0.00	1.00	1.00	0.00	0.00	1.21	0.69	1.87	0.00	1029.5	22.1	41.8
43.89	9.43	3.56	37.0	0.70	25.9	1.21	0.69	0.00	1.00	1.00	0.00	0.00	1.21	0.69	1.92	0.00	1030.6	22.8	43.1
43.80	9.43	3.55	37.0	0.70	25.9	1.21	0.69	0.00	1.00	1.00	0.00	0.00	1.21	0.69	1.98	0.00	1031.7	23.5	44.3
43.70	9.43	3.54	37.0	0.70	25.9	1.20	0.69	0.00	1.00	1.00	0.00	0.00	1.20	0.69	2.04	0.00	1032.7	24.2	45.6
43.61	9.43	3.54	37.0	0.70	25.9	1.20	0.69	0.00	1.00	1.00	0.00	0.00	1.20	0.69	2.10	0.00	1033.8	24.8	46.9
43.52	9.43	3.53	37.0	0.70	25.9	1.20	0.69	0.00	1.00	1.00	0.00	0.00	1.20	0.69	2.16	0.00	1034.9	25.5	48.1
43.42	9.43	3.52	37.0	0.70	25.9	1.20	0.68	0.00	1.00	1.00	0.00	0.00	1.20	0.68	2.22	0.00	1035.9	26.2	49.4
43.33	9.43	3.52	37.0	0.70	25.9	1.20	0.68	0.00	1.00	1.00	0.00	0.00	1.20	0.68	2.27	0.00	1037.0	26.8	50.6
43.23	9.43	3.51	37.0	0.70	25.9	1.19	0.68	0.00	1.00	1.00	0.00	0.00	1.19	0.68	2.33	0.00	1038.0	27.5	51.9
43.14	9.43	3.50	37.0	0.70	25.9	1.19	0.68	0.00	1.00	1.00	0.00	0.00	1.19	0.68	2.39	0.00	1039.1	28.1	53.1
43.04	9.43	3.50	37.0	0.70	25.9	1.19	0.68	0.00	1.00	1.00	0.00	0.00	1.19	0.68	2.45	0.00	1040.1	28.8	54.4
42.95	9.43	3.49	37.0	0.70	25.9	1.19	0.68	0.00	1.00	1.00	0.00	0.00	1.19	0.68	2.51	0.00	1041.2	29.5	55.6
42.86	9.43	3.48	37.0	0.70	25.9	1.18	0.68	0.00	1.00	1.00	0.00	0.00	1.18	0.68	2.56	0.00	1042.3	30.1	56.8
42.76	9.43	3.47	37.0	0.70	25.9	1.18	0.67	0.00	1.00	1.00	0.00	0.00	1.18	0.67	2.62	0.00	1043.3	30.8	58.1
42.67	9.43	3.47	37.0	0.70	25.9	1.18	0.67	0.00	1.00	1.00	0.00	0.00	1.18	0.67	2.68	0.00	1044.3	31.4	59.3
42.57	9.43	3.46	37.0	0.70	25.9	1.18	0.67	0.00	1.00	1.00	0.00	0.00	1.18	0.67	2.74	0.00	1045.4	32.1	60.5
42.48	9.43	3.45	37.0	0.70	25.9	1.17	0.67	0.00	1.00	1.00	0.00	0.00	1.17	0.67	2.80	0.00	1046.4	32.7	61.8
42.38	9.43	3.45	37.0	0.70	25.9	1.17	0.67	0.00	1.00	1.00	0.00	0.00	1.17	0.67	2.86	0.00	1047.5	33.4	63.0
42.29	9.43	3.44	37.0	0.70	25.9	1.17	0.67	0.00	1.00	1.00	0.00	0.00	1.17	0.67	2.91	0.00	1048.5	34.1	64.2
42.20	9.43	3.43	37.0	0.70	25.9	1.17	0.67	0.00	1.00	1.00	0.00	0.00	1.17	0.67	2.97	0.00	1049.5	34.7	65.4
42.10	9.43	3.43	37.0	0.70	25.9	1.16	0.67	0.00	1.00	1.00	0.00	0.00	1.16	0.67	3.03	0.00	1050.6	35.4	66.7
42.01	9.43	3.42	37.0	0.70	25.9	1.16	0.66	0.00	1.00	1.00	0.00	0.00	1.16	0.66	3.09	0.00	1051.6	36.0	67.9
41.91	9.43	3.41	30.0	0.70	21.0	0.92	0.52	1.00	1.00	1.00	1.00	1.00	1.92	1.52	3.15	0.00	1053.3	37.4	70.2
41.82	9.43	3.41	30.0	0.70	21.0	0.92	0.52	1.00	1.00	1.00	1.00	1.00	1.92	1.52	3.21	0.00	1055.0	38.8	72.5
41.73	9.43	3.40	30.0	0.70	21.0	0.91	0.52	1.00	1.00	1.00	1.00	1.00	1.91	1.52	3.26	0.00	1056.7	40.2	74.7
41.63	9.43	3.39	30.0	0.70	21.0	0.91	0.52	1.00	1.00	1.00	1.00	1.00	1.91	1.52	3.32	0.00	1058.4	41.6	77.0
41.54	9.43	3.39	30.0	0.70	21.0	0.91	0.52	1.00	1.00	1.00	1.00	1.00	1.91	1.52	3.38	0.00	1060.1	43.0	79.3
41.44	9.43	3.38	30.0	0.70	21.0	0.91	0.52	1.00	1.00	1.00	1.00	1.00	1.91	1.52	3.44	0.00	1061.8	44.5	81.6
41.35	9.43	3.37	30.0	0.70	21.0	0.91	0.52	1.00	1.00	1.00	1.00	1.00	1.91	1.52	3.50	0.00	1063.5	45.9	83.9
41.25	9.43	3.37	30.0	0.70	21.0	0.90	0.52	1.00	1.00	1.00	1.00	1.00	1.90	1.52	3.56	0.00	1065.2	47.3	86.1
41.16	9.43	3.36	30.0	0.70	21.0	0.90	0.52	1.00	1.00	1.00	1.00	1.00	1.90	1.52	3.61	0.00	1066.9	48.7	88.4
41.07	9.43	3.35	30.0	0.70	21.0	0.90	0.51	1.00	1.00	1.00	1.00	1.00	1.90	1.51	3.67	0.00	1068.6	50.1	90.7
40.97	9.43	3.34	30.0	0.70	21.0	0.90	0.51	1.00	1.00	1.00	1.00	1.00	1.90	1.51	3.73	0.00	1070.2	51.5	93.0
40.88	9.43	3.34	30.0	0.70	21.0	0.90	0.51	1.00	1.00	1.00	1.00	1.00	1.90	1.51	3.79	0.00	1071.9	52.9	95.2
40.78	9.43	3.33	30.0	0.70	21.0	0.90	0.51	1.00	1.00	1.00	1.00	1.00	1.90	1.51	3.85	0.00	1073.6	54.3	97.5
40.69	9.43	3.32	30.0	0.70	21.0	0.89	0.51	1.00	1.00	1.00	1.00	1.00	1.89	1.51	3.91	0.00	1075.3	55.7	99.8
40.60	9.43	3.32	30.0	0.70	21.0	0.89	0.51	1.00	1.00	1.00	1.00	1.00	1.89	1.51	3.96	0.00	1077.0	57.1	102.0
40.50	9.43	3.31	30.0	0.70	21.0	0.89	0.51	1.00	1.00	1.00	1.00	1.00	1.89	1.51	4.02	0.00	1078.6	58.5	104.3
40.41	9.43	3.30	30.0	0.70	21.0	0.89	0.51	1.00	1.00	1.00	1.00	1.00	1.89	1.51	4.08	0.00	1080.3	59.9	106.6
40.31	9.43	3.30	30.0	0.70	21.0	0.89	0.51	1.00	1.00	1.00	1.00	1.00	1.89	1.51	4.14	0.00	1082.0	61.3	108.8
40.22	9.43	3.29	30.0	0.70	21.0	0.88	0.51	1.00	1.00	1.00	1.00	1.00	1.88	1.51	4.20	0.00	1083.7	62.7	111.1
40.12	9.43	3.28	30.0	0.70	21.0	0.88	0.50	1.00	1.00	1.00	1.00	1.00	1.88	1.50	4.26	0.00	1085.3	64.0	113.3
40.03	9.43	3.28	30.0	0.70	21.0	0.88	0.50	1.00	1.00	1.00	1.00	1.00	1.88	1.50	4.31	0.00	1087.0	65.4	115.6
39.94	9.43	3.27	30.0	0.70	21.0	0.88	0.50	1.00	1.00	1.00	1.00	1.00	1.88	1.50	4.37	0.00	1088.7	66.8	117.8
39.84	9.43	3.26	30.0	0.70	21.0	0.88	0.50	1.00	1.00	1.00	1.00	1.00	1.88	1.50	4.43	0.00	1090.3	68.2	120.1
39.75	9.43	3.26	30.0	0.70	21.0	0.88	0.50	1.00	1.00	1.00	1.00	1.00	1.88	1.50	4.49	0.00	1092.0	69.6	122.3
39.65	9.43	3.25	30.0	0.70	21.0	0.87	0.50	1.00	1.00	1.00	1.00	1.00	1.87	1.50	4.55	0.00	1093.7	71.0	124.6
39.56	9.43	3.24	30.0	0.70	21.0	0.87	0.50	1.00	1.00	1.00	1.00	1.00	1.87	1.50	4.61	0.00	1095.3	72.4	126.8
39.46	9.43	3.24	30.0	0.70	21.0	0.87	0.50	1.00	1.00	1.00	1.00	1.00	1.87	1.50	4.66	0.00	1097.0	73.8	129.1
39.37	9.43	3.23	30.0	0.70	21.0	0.87	0.50	1.00	1.00	1.00	1.00	1.00	1.87	1.50	4.72	0.00	1098.7	75.2	131.3
39.28	9.43	3.22	30.0	0.70	21.0	0.87	0.50	1.00	1.00	1.00	1.00	1.00	1.87	1.50	4.78	0.00	1100.3	76.5	133.5
39.18	9.43	3.22	30.0	0.70	21.0	0.86	0.49	1.00	1.00	1.00	1.00	1.00	1.86	1.49	4.84	0.00	1102.0	77.9	135.8
39.09	9.43	3.21	30.0	0.70	21.0	0.86	0.49	1.00	1.00	1.00	1.00	1.00	1.86	1.49	4.90	0.00	1103.6	79.3	138.0
38.99	9.43	3.20	30.0	0.70	21.0	0.86	0.49	1.00	1.00	1.00	1.00	1.00	1.86	1.49	4.96	0.00	1105.3	80.7	140.2
38.90	9.43	3.20	30.0	0.70	21.0	0.86	0.49	1.00	1.00	1.00	1.00	1.00	1.86	1.49	5.01	0.00	1106.9	82.1	142.5
38.81	9.43	3.19	30.0	0.70	21.0	0.86	0.49	1.00	1.00	1.00	1.00	1.00	1.86	1.49	5.07	0.00	1108.6	83.5	144.7
38.71	9.43	3.18	30.0	0.70	21.0	0.86	0.49	1.00	1.00	1.00	1.00	1.00	1.86	1.49	5.13	0.00	1110.2	84.8	146.9
38.62	9.43	3.18	30.0	0.70	21.0	0.85	0.49	1.00	1.00	1.00	1.00	1.00	1.85	1.49	5.19	0.00	1111.9	86.2	149.2
38.52	9.43	3.17	30.0	0.70	21.0	0.85	0.49	1.00	1.00	1.00	1.00	1.00	1.85	1.49	5.25	0.00	1113.5	87.6	151.4
38.43	9.43	3.16	30.0	0.70	21.0	0.85	0.49	1.00	1.00	1.00	1.00	1.00	1.85	1.49	5.30	0.00	1115.2	89.0	153.6
38.33	9.43	3.16	30.0	0.70	21.0	0.85	0.48	1.00	1.00	1.00	1.00	1.00	1.85	1.48	5.36	0.00	1116.8	90.4	155.8
38.24	9.43	3.15	30.0	0.70	21.0	0.85	0.48	1.00	1.00	1.00	1.00	1.00	1.85	1.48	5.42	0.00	1118.4	91.7	158.0
38.15	9.43	3.14	30.0	0.70	21.0	0.84	0.48	1.00	1.00	1.00	1.00	1.00	1.84	1.48	5.48	0.00	1120.1	93.1	160.3
38.05	9.43	3.14	30.0	0.70	21.0	0.84	0.48	1.00	1.00	1.00	1.00	1.00	1.84	1.48	5.54	0.00	1121.7	94.5	162.5
37.96	9.43	3.13	30.0	0.70	21.0	0.84	0.48	1.00	1.00	1.00	1.00	1.00	1.84	1.48	5.60	0.00	1123.3	95.9	164.7
37.86	9.43	3.12	30.0	0.70	21.0	0.84	0.48	1.00	1.00	1.00	1.00	1.00	1.84	1.48	5.65	0.00	1125.0	97.2	166.9
37.77	9.43	3.12	30.0	0.70	21.0	0.84	0.48	1.00	1.00	1.00	1.00	1.00	1.84	1.48	5.71	0.00	1126.6	98.6	169.1
37.68	9.43	3.11	30.0	0.70	21.0	0.84	0.48	1.00	1.00	1.00	1.00	1.00	1.84	1.48	5.77	0.00	1128.2	100.0	171.3
37.58	9.43	3.10	30.0	0.70	21.0	0.83	0.48	1.00	1.00	1.00	1.00	1.00	1.83	1.48	5.83	0.00	1129.9	101.3	173.5
37.49	9.43	3.10	30.0	0.70	21.0	0.83	0.48	1.00	1.00	1.00	1.00	1.00	1.83	1.48	5.89	0.00	1131.5	102.7	175.7
37.39	9.43	3.09	30.0	0.70	21.0	0.83	0.47	1.00	1.00	1.00	1.00	1.00	1.83	1.47	5.95	0.00	1133.1	104.1	177.9
37.30	9.43	3.08	30.0	0.70	21.0	0.83	0.47	1.00	1.00	1.00	1.00	1.00	1.83	1.47	6.00	0.00	1134.7	105.4	180.1
37.20	9.43	3.08	30.0	0.70	21.0	0.83	0.47	1.00	1.00	1.00	1.00	1.00	1.83	1.47	6.06	0.00	1136.4	106.8	182.3

37.11	9.43	3.07	30.0	0.70	21.0	0.83	0.47	1.00	1.00	1.00	1.00	1.00	1.83	1.47	6.12	0.00	1138.0	108.2	184.5
37.02	9.43	3.06	30.0	0.70	21.0	0.82	0.47	1.00	1.00	1.00	1.00	1.00	1.82	1.47	6.18	0.00	1139.6	109.5	186.7
36.92	9.43	3.06	30.0	0.70	21.0	0.82	0.47	1.00	1.00	1.00	1.00	1.00	1.82	1.47	6.24	0.00	1141.2	110.9	188.9
36.83	9.43	3.05	30.0	0.70	21.0	0.82	0.47	1.00	1.00	1.00	1.00	1.00	1.82	1.47	6.30	0.00	1142.8	112.3	191.1
36.73	9.43	3.04	30.0	0.70	21.0	0.82	0.47	1.00	1.00	1.00	1.00	1.00	1.82	1.47	6.35	0.00	1144.4	113.6	193.3
36.64	9.43	3.04	30.0	0.70	21.0	0.82	0.47	1.00	1.00	1.00	1.00	1.00	1.82	1.47	6.41	0.00	1146.1	115.0	195.4
36.55	9.43	3.03	30.0	0.70	21.0	0.81	0.47	1.00	1.00	1.00	1.00	1.00	1.81	1.47	6.47	0.00	1147.7	116.3	197.6
36.45	9.43	3.02	30.0	0.70	21.0	0.81	0.46	1.00	1.00	1.00	1.00	1.00	1.81	1.46	6.53	0.00	1149.3	117.7	199.8
36.36	9.43	3.02	30.0	0.70	21.0	0.81	0.46	1.00	1.00	1.00	1.00	1.00	1.81	1.46	6.59	0.00	1150.9	119.0	202.0
36.26	9.43	3.01	30.0	0.70	21.0	0.81	0.46	1.00	1.00	1.00	1.00	1.00	1.81	1.46	6.65	0.00	1152.5	120.4	204.2
36.17	9.43	3.00	30.0	0.70	21.0	0.81	0.46	1.00	1.00	1.00	1.00	1.00	1.81	1.46	6.70	0.00	1154.1	121.8	206.3
36.07	9.43	3.00	30.0	0.70	21.0	0.81	0.46	1.00	1.00	1.00	1.00	1.00	1.81	1.46	6.76	0.00	1155.7	123.1	208.5
35.98	9.43	2.99	30.0	0.70	21.0	0.80	0.46	1.00	1.00	1.00	1.00	1.00	1.80	1.46	6.82	0.00	1157.3	124.5	210.7
35.89	9.43	2.98	30.0	0.70	21.0	0.80	0.46	1.00	1.00	1.00	1.00	1.00	1.80	1.46	6.88	0.00	1158.9	125.8	212.9
35.79	9.43	2.98	30.0	0.70	21.0	0.80	0.46	1.00	1.00	1.00	1.00	1.00	1.80	1.46	6.94	0.00	1160.5	127.2	215.0
35.70	9.43	2.97	30.0	0.70	21.0	0.80	0.46	1.00	1.00	1.00	1.00	1.00	1.80	1.46	7.00	0.00	1162.1	128.5	217.2
35.60	9.43	2.96	30.0	0.70	21.0	0.80	0.45	1.00	1.00	1.00	1.00	1.00	1.80	1.45	7.05	0.00	1163.7	129.9	219.4
35.51	9.43	2.96	30.0	0.70	21.0	0.79	0.45	1.00	1.00	1.00	1.00	1.00	1.79	1.45	7.11	0.00	1165.3	131.2	221.5
35.41	9.43	2.95	30.0	0.70	21.0	0.79	0.45	1.00	1.00	1.00	1.00	1.00	1.79	1.45	7.17	0.00	1166.9	132.6	223.7
35.32	9.43	2.94	30.0	0.70	21.0	0.79	0.45	1.00	1.00	1.00	1.00	1.00	1.79	1.45	7.23	0.00	1168.5	133.9	225.8
35.23	9.43	2.94	30.0	0.70	21.0	0.79	0.45	1.00	1.00	1.00	1.00	1.00	1.79	1.45	7.29	0.00	1170.0	135.3	228.0
35.13	9.43	2.93	30.0	0.70	21.0	0.79	0.45	1.00	1.00	1.00	1.00	1.00	1.79	1.45	7.35	0.00	1171.6	136.6	230.2
35.04	9.43	2.92	30.0	0.70	21.0	0.79	0.45	1.00	1.00	1.00	1.00	1.00	1.79	1.45	7.40	0.00	1173.2	138.0	232.3
34.94	9.43	2.92	30.0	0.70	21.0	0.78	0.45	1.00	1.00	1.00	1.00	1.00	1.78	1.45	7.46	0.00	1174.8	139.3	234.5
34.85	9.43	2.91	30.0	0.70	21.0	0.78	0.45	1.00	1.00	1.00	1.00	1.00	1.78	1.45	7.52	0.00	1176.4	140.6	236.6
34.76	9.43	2.90	30.0	0.70	21.0	0.78	0.45	1.00	1.00	1.00	1.00	1.00	1.78	1.45	7.58	0.00	1178.0	142.0	238.8
34.66	9.43	2.90	30.0	0.70	21.0	0.78	0.44	1.00	1.00	1.00	1.00	1.00	1.78	1.44	7.64	0.00	1179.5	143.3	240.9
34.57	9.43	2.89	30.0	0.70	21.0	0.78	0.44	1.00	1.00	1.00	1.00	1.00	1.78	1.44	7.69	0.00	1181.1	144.7	243.1
34.47	9.43	2.88	30.0	0.70	21.0	0.77	0.44	1.00	1.00	1.00	1.00	1.00	1.77	1.44	7.75	0.00	1182.7	146.0	245.2
34.38	9.43	2.88	30.0	0.70	21.0	0.77	0.44	1.00	1.00	1.00	1.00	1.00	1.77	1.44	7.81	0.00	1184.3	147.3	247.3
34.28	9.43	2.87	30.0	0.70	21.0	0.77	0.44	1.00	1.00	1.00	1.00	1.00	1.77	1.44	7.87	0.00	1185.8	148.7	249.5
34.19	9.43	2.86	30.0	0.70	21.0	0.77	0.44	1.00	1.00	1.00	1.00	1.00	1.77	1.44	7.93	0.00	1187.4	150.0	251.6
34.10	9.43	2.86	30.0	0.70	21.0	0.77	0.44	1.00	1.00	1.00	1.00	1.00	1.77	1.44	7.99	0.00	1189.0	151.3	253.7
34.00	9.43	2.85	30.0	0.70	21.0	0.77	0.44	1.00	1.00	1.00	1.00	1.00	1.77	1.44	8.04	0.00	1190.5	152.7	255.9
33.91	9.43	2.84	30.0	0.70	21.0	0.76	0.44	1.00	1.00	1.00	1.00	1.00	1.76	1.44	8.10	0.00	1192.1	154.0	258.0
33.81	9.43	2.84	30.0	0.70	21.0	0.76	0.44	1.00	1.00	1.00	1.00	1.00	1.76	1.44	8.16	0.00	1193.7	155.3	260.1
33.72	9.43	2.83	30.0	0.70	21.0	0.76	0.43	1.00	1.00	1.00	1.00	1.00	1.76	1.43	8.22	0.00	1195.2	156.7	262.3
33.63	9.43	2.82	30.0	0.70	21.0	0.76	0.43	1.00	1.00	1.00	1.00	1.00	1.76	1.43	8.28	0.00	1196.8	158.0	264.4
33.53	9.43	2.82	30.0	0.70	21.0	0.76	0.43	1.00	1.00	1.00	1.00	1.00	1.76	1.43	8.34	0.00	1198.4	159.3	266.5
33.44	9.43	2.81	30.0	0.70	21.0	0.75	0.43	1.00	1.00	1.00	1.00	1.00	1.75	1.43	8.39	0.00	1199.9	160.7	268.6
33.34	9.43	2.80	30.0	0.70	21.0	0.75	0.43	1.00	1.00	1.00	1.00	1.00	1.75	1.43	8.45	0.00	1201.5	162.0	270.8
33.25	9.43	2.80	30.0	0.70	21.0	0.75	0.43	1.00	1.00	1.00	1.00	1.00	1.75	1.43	8.51	0.00	1203.0	163.3	272.9
33.15	9.43	2.79	30.0	0.70	21.0	0.75	0.43	1.00	1.00	1.00	1.00	1.00	1.75	1.43	8.57	0.00	1204.6	164.7	275.0
33.06	9.43	2.78	30.0	0.70	21.0	0.75	0.43	1.00	1.00	1.00	1.00	1.00	1.75	1.43	8.63	0.00	1206.1	166.0	277.1
32.97	9.43	2.78	30.0	0.70	21.0	0.75	0.43	1.00	1.00	1.00	1.00	1.00	1.75	1.43	8.69	0.00	1207.7	167.3	279.2
32.87	9.43	2.77	30.0	0.70	21.0	0.74	0.43	1.00	1.00	1.00	1.00	1.00	1.74	1.43	8.74	0.00	1209.2	168.6	281.3
32.78	9.43	2.76	30.0	0.70	21.0	0.74	0.42	1.00	1.00	1.00	1.00	1.00	1.74	1.42	8.80	0.00	1210.8	169.9	283.4
32.68	9.43	2.76	30.0	0.70	21.0	0.74	0.42	1.00	1.00	1.00	1.00	1.00	1.74	1.42	8.86	0.00	1212.3	171.3	285.5
32.59	9.43	2.75	30.0	0.70	21.0	0.74	0.42	1.00	1.00	1.00	1.00	1.00	1.74	1.42	8.92	0.00	1213.9	172.6	287.6
32.49	9.43	2.74	30.0	0.70	21.0	0.74	0.42	1.00	1.00	1.00	1.00	1.00	1.74	1.42	8.98	0.00	1215.4	173.9	289.7
32.40	9.43	2.74	30.0	0.70	21.0	0.74	0.42	1.00	1.00	1.00	1.00	1.00	1.74	1.42	9.04	0.00	1216.9	175.2	291.8
32.31	9.43	2.73	30.0	0.70	21.0	0.73	0.42	1.00	1.00	1.00	1.00	1.00	1.73	1.42	9.09	0.00	1218.5	176.5	293.9
32.21	9.43	2.72	30.0	0.70	21.0	0.73	0.42	1.00	1.00	1.00	1.00	1.00	1.73	1.42	9.15	0.00	1220.0	177.9	296.0
32.12	9.43	2.72	30.0	0.70	21.0	0.73	0.42	1.00	1.00	1.00	1.00	1.00	1.73	1.42	9.21	0.00	1221.6	179.2	298.1
32.02	9.43	2.71	30.0	0.70	21.0	0.73	0.42	1.00	1.00	1.00	1.00	1.00	1.73	1.42	9.27	0.00	1223.1	180.5	300.2
31.93	9.43	2.70	30.0	0.70	21.0	0.73	0.41	1.00	1.00	1.00	1.00	1.00	1.73	1.41	9.33	0.00	1224.6	181.8	302.3
31.84	9.43	2.70	30.0	0.70	21.0	0.72	0.41	1.00	1.00	1.00	1.00	1.00	1.72	1.41	9.39	0.00	1226.2	183.1	304.4
31.74	9.43	2.69	30.0	0.70	21.0	0.72	0.41	1.00	1.00	1.00	1.00	1.00	1.72	1.41	9.44	0.00	1227.7	184.4	306.5
31.65	9.43	2.68	30.0	0.70	21.0	0.72	0.41	1.00	1.00	1.00	1.00	1.00	1.72	1.41	9.50	0.00	1229.2	185.7	308.6
31.55	9.43	2.68	30.0	0.70	21.0	0.72	0.41	1.00	1.00	1.00	1.00	1.00	1.72	1.41	9.56	0.00	1230.7	187.1	310.7
31.46	9.43	2.67	30.0	0.70	21.0	0.72	0.41	1.00	1.00	1.00	1.00	1.00	1.72	1.41	9.62	0.00	1232.3	188.4	312.7
31.36	9.43	2.66	30.0	0.70	21.0	0.72	0.41	1.00	1.00	1.00	1.00	1.00	1.72	1.41	9.68	0.00	1233.8	189.7	314.8
31.27	9.43	2.66	30.0	0.70	21.0	0.71	0.41	1.00	1.00	1.00	1.00	1.00	1.71	1.41	9.74	0.00	1235.3	191.0	316.9
31.18	9.43	2.65	30.0	0.70	21.0	0.71	0.41	1.00	1.00	1.00	1.00	1.00	1.71	1.41	9.79	0.00	1236.8	192.3	319.0
31.08	9.43	2.64	30.0	0.70	21.0	0.71	0.41	1.00	1.00	1.00	1.00	1.00	1.71	1.41	9.85	0.00	1238.3	193.6	321.1
30.99	9.43	2.64	30.0	0.70	21.0	0.71	0.40	1.00	1.00	1.00	1.00	1.00	1.71	1.40	9.91	0.00	1239.9	194.9	323.1
30.89	9.43	2.63	30.0	0.70	21.0	0.71	0.40	1.00	1.00	1.00	1.00	1.00	1.71	1.40	9.97	0.00	1241.4	196.2	325.2
30.80	9.43	2.62	30.0	0.70	21.0	0.70	0.40	1.00	1.00	1.00	1.00	1.00	1.70	1.40	10.03	0.00	1242.9	197.5	327.3
30.71	9.43	2.62	30.0	0.70	21.0	0.70	0.40	1.00	1.00	1.00	1.00	1.00	1.70	1.40	10.08	0.00	1244.4	198.8	329.3
30.61	9.43	2.61	30.0	0.70	21.0	0.70	0.40	1.00	1.00	1.00	1.00	1.00	1.70	1.40	10.14	0.00	1245.9	200.1	331.4
30.52	9.43	2.60	30.0	0.70	21.0	0.70	0.40	1.00	1.00	1.00	1.00	1.00	1.70	1.40	10.20	0.00	1247.4	201.4	333.5
30.42	9.43	2.59	30.0	0.70	21.0	0.70	0.40	1.00	1.00	1.00	1.00	1.00	1.70	1.40	10.26	0.00	1248.9	202.7	335.5
30.33	9.43	2.59	30.0	0.70	21.0	0.70	0.40	1.00	1.00	1.00	1.00	1.00	1.70	1.40	10.32	0.00	1250.4	204.0	337.6
30.23	9.43	2.58	30.0	0.70	21.0	0.69	0.40	1.00	1.00	1.00	1.00	1.00	1.69	1.40	10.38	0.00	1251.9	205.3	339.6
30.14	9.43	2.57	30.0	0.70	21.0	0.69	0.40	1.00	1.00	1.00	1.00	1.00	1.69	1.40	10.43	0.00	1253.4	206.6	341.7
30.05	9.43	2.57	30.0	0.70	21.0	0.69	0.39	1.00	1.00	1.00	1.00	1.00	1.69	1.39	10.49	0.00	1254.9	207.9	343.7
29.95	9.43	2.56	30.0	0.70	21.0	0.69	0.39	1.00	1.00	1.00	1.00	1.00	1.69	1.39	10.55	0.00	1256.4	209.2	345.8
29.86	9.43	2.55	30.0	0.70	21.0	0.69	0.39	1.00	1.00	1.00	1.00	1.00	1.69	1.39	10.61	0.00	1257.9	210.5	347.9
29.76	9.43	2.55	30.0	0.70	21.0	0.68	0.39	1.00	1.00	1.00	1.00	1.00	1.68	1.39	10.67	0.00	1259.4	211.8	349.9
29.67	9.43	2.54	30.0	0.70	21.0	0.68	0.39	1.00	1.00	1.00	1.00	1.00	1.68	1.39	10.73	0.00	1260.9	213.1	351.9
29.58	9.43	2.53	30.0	0.70	21.0	0.68	0.39	1.00	1.00	1.00	1.00	1.00	1.68	1.39	10.78	0.00	1262.4	214.4	354.0
29.48	9.43	2.53	30.0	0.70	21.0	0.68	0.39	1.00	1.00	1.00	1.00	1.00	1.68	1.39	10.84	0.00	1263.9	215.7	356.0
29.39	9.43	2.52	30.0	0.70	21.0	0.68	0.39	1.00	1.00	1.00	1.00	1.00	1.68	1.39	10.90	0.00	1265.4	217.0	358.1
29.29	9.43	2.51	30.0	0.70	21.0	0.68	0.39	1.00	1.00	1.00	1.00	1.00	1.68	1.39	10.96	0.00	1266.9	218.2	360.1
29.20	9.43	2.51	30.0	0.70	21.0	0.67	0.39	1.00	1.00	1.00	1.00	1.00	1.67	1.39	11.02	0.00	1268.4	219.5	362.1
29.10	9.43	2.50	30.0	0.70	21.0	0.67	0.38	1.00	1.00	1.00	1.00	1.00	1.67	1.38	11.08	0.00	1269.9	220.8	364.2
29.01	9.43	2.49	30.0	0.70	21.0	0.67	0.38	1.00	1.00	1.00	1.00	1.00	1.67	1.38	11.13	0.00	1271.3	222.1	366.2
28.92	9.43	2.49	30.0	0.70	21.0	0.67	0.38	1.00	1.00	1.00	1.00	1.00	1.67	1.38	11.19	0.00	1272.8	223.4	368.2
28.82	9.43	2.48	30.0	0.70	21.0	0.67	0.38	1.00	1.00	1.00	1.00	1.00	1.67	1.38	11.25	0.00	1274.3	224.7	370.3
28.73	9.43	2.47	30.0	0.70	21.0	0.66	0.38	1.00	1.00	1.00	1.00	1.00	1.66	1.38	11.31	0.00	1275.8	226.0	372.3
28.63	9.43	2.47	30.0	0.70	21.0	0.66	0.38	1.00	1.00	1.00	1.00	1.00	1.66	1.38	11.37	0.00	1277.2	227.2	374.3
28.54	9.43	2.46	30.0	0.70	21.0	0.66	0.38	1.00	1.00	1.00	1.00	1.00	1.66	1.38	11.43	0.00	1278.7	228.5	376.4
28.44	9.43	2.45	30.0	0.70	21.0	0.66	0.38	1.00	1.00	1.00	1.00	1.00	1.66	1.38	11.48	0.00	1280.2	229.8	378.4
28.35	9.43	2.45	30.0	0.70	21.0	0.66	0.38	1.00	1.00	1.00	1.00	1.00	1.66	1.38	11.54	0.00	1281.7	231.1	380.4
28.26	9.43	2.44	30.0	0.70	21.0	0.66	0.37	1.00	1.00	1.00	1.00	1.00	1.66	1.37	11.60	0.00	1283.1	232.4	382.4
28.16	9.43	2.43	30.0	0.70	21.0	0.65	0.37	1.00	1.00	1.00	1.00	1.00	1.65	1.37	11.66	0.00	1284.6	233.6	384.4
28.07	9.43	2.43	30.0	0.70	21.0	0.65	0.37	1.00	1.00	1.00	1.00	1.00	1.65	1.37	11.72	0.00	1286.1	234.9	386.4
27.97	9.43	2.42	30.0	0.70	21.0	0.65	0.37	1.00	1.00	1.00	1.00	1.00	1.65	1.37	11.78	0.00	1287.5	236.2	388.5
27.88	9.43	2.41	30.0	0.70	21.0	0.65	0.37	1.00	1.00	1.00	1.00	1.00	1.65	1.37	11.83	0.00	1289.0	237.5	390.5
27.79	9.43	2.41	30.0	0.70	21.0	0.65	0.37	1.00	1.00	1.00	1.00	1.00	1.65	1.37	11.89	0.00	1290.5	238.7	392.5
27.69	9.43	2.40	30.0	0.70	21.0	0.65	0.37	1.00	1.00	1.00	1.00	1.00	1.65	1.37	11.95	0.00	1291.9	240.0	394.5
27.60	9.43	2.39	30.0	0.70	21.0	0.64	0.37	1.00	1.00	1.00	1.00	1.00	1.64	1.37	12.01	0.00	1293.4	241.3	396.5
27.50	9.43	2.39	30.0	0.70	21.0	0.64	0.37	1.00	1.00	1.00	1.00	1.00	1.64	1.37	12.07	0.00	1294.8	242.6	398.5
27.41	9.43	2.38	30.0	0.70	21.0	0.64	0.37	1.00	1.00	1.00	1.00	1.00	1.64	1.37	12.13	0.00	1296.3	243.8	400.5
27.31	9.43	2.37	30.0	0.70	21.0	0.64	0.36	1.00	1.00	1.00	1.00	1.00	1.64	1.36	12.18	0.00	1297.7	245.1	402.5
27.22	9.43	2.37	30.0	0.70	21.0	0.64	0.36	1.00	1.00	1.00	1.00	1.00	1.64	1.36	12.24	0.00	1299.2	246.4	404.5
27.13	9.43	2.36	30.0	0.70	21.0	0.63	0.36	1.00	1.00	1.00	1.00	1.00	1.63	1.36	12.30	0.00	1300.7	247.6	406.5
27.03	9.43	2.35	30.0	0.70	21.0	0.63	0.36	1.00	1.00	1.00	1.00	1.00	1.63	1.36	12.36	0.00	1302.1	248.9	408.5
26.94	9.43	2.35	30.0	0.70	21.0	0.63	0.36	1.00	1.00	1.00	1.00	1.00	1.63	1.36	12.42	0.00	1303.5	250.2	410.5
26.84	9.43	2.34	30.0	0.70	21.0	0.63	0.36	1.00	1.00	1.00	1.00	1.00	1.63	1.36	12.47	0.00	1305.0	251.4	412.5
26.75	9.43	2.33	30.0	0.70	21.0	0.63	0.36	1.00	1.00	1.00	1.00	1.00	1.63	1.36	12.53	0.00	1306.4	252.7	414.4
26.66	9.43	2.33	30.0	0.70	21.0	0.63	0.36	1.00	1.00	1.00	1.00	1.00	1.63	1.36	12.59	0.00	1307.9	254.0	416.4
26.56	9.43	2.32	30.0	0.70	21.0	0.62	0.36	1.00	1.00	1.00	1.00	1.00	1.62	1.36	12.65	0.00	1309.3	255.2	418.4
26.47	9.43	2.31	30.0	0.70	21.0	0.62	0.36	1.00	1.00	1.00	1.00	1.00	1.62	1.36	12.71	0.00	1310.8	256.5	420.4
26.37	9.43	2.31	30.0	0.70	21.0	0.62	0.35	1.00	1.00	1.00	1.00	1.00	1.62	1.35	12.77	0.00	1312.2	257.7	422.4
26.28	9.43	2.30	30.0	0.70	21.0	0.62	0.35	1.00	1.00	1.00	1.00	1.00	1.62	1.35	12.82	0.00	1313.6	259.0	424.4
26.18	9.43	2.29	30.0	0.70	21.0	0.62	0.35	1.00	1.00	1.00	1.00	1.00	1.62	1.35	12.88	0.00	1315.1	260.3	426.3

26.09	9.43	2.29	30.0	0.70	21.0	0.61	0.35	1.00	1.00	1.00	1.00	1.00	1.61	1.35	12.94	0.00	1316.5	261.5	428.3
26.00	9.43	2.28	30.0	0.70	21.0	0.61	0.35	1.00	1.00	1.00	1.00	1.00	1.61	1.35	13.00	0.00	1317.9	262.8	430.3
25.90	9.43	2.27	30.0	0.70	21.0	0.61	0.35	1.00	1.00	1.00	1.00	1.00	1.61	1.35	13.06	0.00	1319.4	264.0	432.2
25.81	9.43	2.27	30.0	0.70	21.0	0.61	0.35	1.00	1.00	1.00	1.00	1.00	1.61	1.35	13.12	0.00	1320.8	265.3	434.2
25.71	9.43	2.26	30.0	0.70	21.0	0.61	0.35	1.00	1.00	1.00	1.00	1.00	1.61	1.35	13.17	0.00	1322.2	266.5	436.2
25.62	9.43	2.25	30.0	0.70	21.0	0.61	0.35	1.00	1.00	1.00	1.00	1.00	1.61	1.35	13.23	0.00	1323.6	267.8	438.1
25.53	9.43	2.25	30.0	0.70	21.0	0.60	0.34	1.00	1.00	1.00	1.00	1.00	1.60	1.34	13.29	0.00	1325.1	269.0	440.1
25.43	9.43	2.24	30.0	0.70	21.0	0.60	0.34	1.00	1.00	1.00	1.00	1.00	1.60	1.34	13.35	0.00	1326.5	270.3	442.1
25.34	9.43	2.23	30.0	0.70	21.0	0.60	0.34	1.00	1.00	1.00	1.00	1.00	1.60	1.34	13.41	0.00	1327.9	271.5	444.0
25.24	9.43	2.23	30.0	0.70	21.0	0.60	0.34	1.00	1.00	1.00	1.00	1.00	1.60	1.34	13.47	0.00	1329.3	272.8	446.0
25.15	9.43	2.22	30.0	0.70	21.0	0.60	0.34	1.00	1.00	1.00	1.00	1.00	1.60	1.34	13.52	0.00	1330.8	274.0	447.9
25.05	9.43	2.21	30.0	0.70	21.0	0.59	0.34	1.00	1.00	1.00	1.00	1.00	1.59	1.34	13.58	0.00	1332.2	275.3	449.9
24.96	9.43	2.21	30.0	0.70	21.0	0.59	0.34	1.00	1.00	1.00	1.00	1.00	1.59	1.34	13.64	0.00	1333.6	276.5	451.9
24.87	9.43	2.20	30.0	0.70	21.0	0.59	0.34	1.00	1.00	1.00	1.00	1.00	1.59	1.34	13.70	0.00	1335.0	277.8	453.8
24.77	9.43	2.19	30.0	0.70	21.0	0.59	0.34	1.00	1.00	1.00	1.00	1.00	1.59	1.34	13.76	0.00	1336.4	279.0	455.7
24.68	9.43	2.19	30.0	0.70	21.0	0.59	0.34	1.00	1.00	1.00	1.00	1.00	1.59	1.34	13.82	0.00	1337.8	280.3	457.7
24.58	9.43	2.18	30.0	0.70	21.0	0.59	0.33	1.00	1.00	1.00	1.00	1.00	1.59	1.33	13.87	0.00	1339.2	281.5	459.6
24.49	9.43	2.17	0.0	0.70	0.0	0.00	0.00	1.50	1.00	1.00	-1.50	1.50	-1.50	1.50	13.93	-1.33	1337.9	282.9	459.6
24.39	9.43	2.17	0.0	0.70	0.0	0.00	0.00	1.50	1.00	1.00	-1.50	1.50	-1.50	1.50	13.99	-2.66	1336.6	284.3	459.6
24.30	9.43	2.16	0.0	0.70	0.0	0.00	0.00	1.50	1.00	1.00	-1.50	1.50	-1.50	1.50	14.05	-3.99	1335.2	285.7	459.6
24.21	9.43	2.15	0.0	0.70	0.0	0.00	0.00	1.50	1.00	1.00	-1.50	1.50	-1.50	1.50	14.11	-5.33	1333.9	287.1	459.6
24.11	9.43	2.15	0.0	0.70	0.0	0.00	0.00	1.50	1.00	1.00	-1.50	1.50	-1.50	1.50	14.17	-6.66	1332.6	288.5	459.6
24.02	9.43	2.14	0.0	0.70	0.0	0.00	0.00	1.50	1.00	1.00	-1.50	1.50	-1.50	1.50	14.22	-7.99	1331.2	289.9	459.6
23.92	9.43	2.13	0.0	0.70	0.0	0.00	0.00	1.50	1.00	1.00	-1.50	1.50	-1.50	1.50	14.28	-9.32	1329.9	291.2	459.6
23.83	9.43	2.13	0.0	0.70	0.0	0.00	0.00	1.50	1.00	1.00	-1.50	1.50	-1.50	1.50	14.34	-10.65	1328.6	292.6	459.6
23.74	9.43	2.12	0.0	0.70	0.0	0.00	0.00	1.50	1.00	1.00	-1.50	1.50	-1.50	1.50	14.40	-11.98	1327.2	294.0	459.6
23.64	9.43	2.11	0.0	0.70	0.0	0.00	0.00	1.50	1.00	1.00	-1.50	1.50	-1.50	1.50	14.46	-13.32	1325.9	295.4	459.6
23.55	9.43	2.11	0.0	0.70	0.0	0.00	0.00	1.50	1.00	1.00	-1.50	1.50	-1.50	1.50	14.52	-14.65	1324.6	296.8	459.6
23.45	9.43	2.10	0.0	0.70	0.0	0.00	0.00	1.50	1.00	1.00	-1.50	1.50	-1.50	1.50	14.57	-15.98	1323.2	298.2	459.6
23.36	9.43	2.09	0.0	0.70	0.0	0.00	0.00	1.50	1.00	1.00	-1.50	1.50	-1.50	1.50	14.63	-17.31	1321.9	299.6	459.6
23.26	9.43	2.09	0.0	0.70	0.0	0.00	0.00	1.50	1.00	1.00	-1.50	1.50	-1.50	1.50	14.69	-18.64	1320.6	301.0	459.6
23.17	9.43	2.08	0.0	0.70	0.0	0.00	0.00	1.50	1.00	1.00	-1.50	1.50	-1.50	1.50	14.75	-19.97	1319.2	302.4	459.6
23.08	9.43	2.07	0.0	0.70	0.0	0.00	0.00	1.50	1.00	1.00	-1.50	1.50	-1.50	1.50	14.81	-21.31	1317.9	303.8	459.6
22.98	9.43	2.07	0.0	0.70	0.0	0.00	0.00	1.50	1.00	1.00	-1.50	1.50	-1.50	1.50	14.87	-22.64	1316.6	305.1	459.6
22.89	9.43	2.06	0.0	0.70	0.0	0.00	0.00	1.50	1.00	1.00	-1.50	1.50	-1.50	1.50	14.92	-23.97	1315.3	306.5	459.6
22.79	9.43	2.05	0.0	0.70	0.0	0.00	0.00	1.50	1.00	1.00	-1.50	1.50	-1.50	1.50	14.98	-25.30	1313.9	307.9	459.6
22.70	9.43	2.05	0.0	0.70	0.0	0.00	0.00	1.50	1.00	1.00	-1.50	1.50	-1.50	1.50	15.04	-26.63	1312.6	309.3	459.6
22.61	9.43	2.04	0.0	0.70	0.0	0.00	0.00	1.50	1.00	1.00	-1.50	1.50	-1.50	1.50	15.10	-27.96	1311.3	310.7	459.6
22.51	9.43	2.03	0.0	0.70	0.0	0.00	0.00	1.50	1.00	1.00	-1.50	1.50	-1.50	1.50	15.16	-29.29	1309.9	312.1	459.6
22.42	9.43	2.03	0.0	0.70	0.0	0.00	0.00	1.50	1.00	1.00	-1.50	1.50	-1.50	1.50	15.21	-30.63	1308.6	313.5	459.6
22.32	9.43	2.02	0.0	0.70	0.0	0.00	0.00	1.50	1.00	1.00	-1.50	1.50	-1.50	1.50	15.27	-31.96	1307.3	314.9	459.6
22.23	9.43	2.01	0.0	0.70	0.0	0.00	0.00	1.50	1.00	1.00	-1.50	1.50	-1.50	1.50	15.33	-33.29	1305.9	316.3	459.6
22.13	9.43	2.01	0.0	0.70	0.0	0.00	0.00	1.50	1.00	1.00	-1.50	1.50	-1.50	1.50	15.39	-34.62	1304.6	317.7	459.6
22.04	9.43	2.00	0.0	0.70	0.0	0.00	0.00	1.50	1.00	1.00	-1.50	1.50	-1.50	1.50	15.45	-35.95	1303.3	319.0	459.6
21.95	9.43	1.99	34.0	0.70	23.8	0.62	0.35	0.00	1.00	1.00	0.00	0.00	0.62	0.35	15.51	-35.95	1303.8	319.4	460.3
21.85	9.43	1.99	34.0	0.70	23.8	0.61	0.35	0.00	1.00	1.00	0.00	0.00	0.61	0.35	15.56	-35.95	1304.4	319.8	460.9
21.76	9.43	1.98	34.0	0.70	23.8	0.61	0.35	0.00	1.00	1.00	0.00	0.00	0.61	0.35	15.62	-35.95	1304.9	320.2	461.6
21.66	9.43	1.98	34.0	0.70	23.8	0.61	0.35	0.00	1.00	1.00	0.00	0.00	0.61	0.35	15.68	-35.95	1305.4	320.5	462.2
21.57	9.43	1.97	34.0	0.70	23.8	0.61	0.35	0.00	1.00	1.00	0.00	0.00	0.61	0.35	15.74	-35.95	1306.0	320.9	462.8
21.47	9.43	1.97	34.0	0.70	23.8	0.61	0.35	0.00	1.00	1.00	0.00	0.00	0.61	0.35	15.80	-35.95	1306.5	321.3	463.5
21.38	9.43	1.96	34.0	0.70	23.8	0.61	0.35	0.00	1.00	1.00	0.00	0.00	0.61	0.35	15.86	-35.95	1307.1	321.6	464.1
21.29	9.43	1.96	34.0	0.70	23.8	0.60	0.35	0.00	1.00	1.00	0.00	0.00	0.60	0.35	15.91	-35.95	1307.6	322.0	464.7
21.19	9.43	1.95	34.0	0.70	23.8	0.60	0.34	0.00	1.00	1.00	0.00	0.00	0.60	0.34	15.97	-35.95	1308.1	322.3	465.4
21.10	9.43	1.94	34.0	0.70	23.8	0.60	0.34	0.00	1.00	1.00	0.00	0.00	0.60	0.34	16.03	-35.95	1308.7	322.7	466.0
21.00	9.43	1.94	34.0	0.70	23.8	0.60	0.34	0.00	1.00	1.00	0.00	0.00	0.60	0.34	16.09	-35.95	1309.2	323.1	466.6
20.91	9.43	1.93	34.0	0.70	23.8	0.60	0.34	0.00	1.00	1.00	0.00	0.00	0.60	0.34	16.15	-35.95	1309.7	323.4	467.3
20.82	9.43	1.93	34.0	0.70	23.8	0.60	0.34	0.00	1.00	1.00	0.00	0.00	0.60	0.34	16.21	-35.95	1310.3	323.8	467.9
20.72	9.43	1.92	34.0	0.70	23.8	0.59	0.34	0.00	1.00	1.00	0.00	0.00	0.59	0.34	16.26	-35.95	1310.8	324.2	468.5
20.63	9.43	1.92	34.0	0.70	23.8	0.59	0.34	0.00	1.00	1.00	0.00	0.00	0.59	0.34	16.32	-35.95	1311.3	324.5	469.1
20.53	9.43	1.91	34.0	0.70	23.8	0.59	0.34	0.00	1.00	1.00	0.00	0.00	0.59	0.34	16.38	-35.95	1311.8	324.9	469.7
20.44	9.43	1.91	34.0	0.70	23.8	0.59	0.34	0.00	1.00	1.00	0.00	0.00	0.59	0.34	16.44	-35.95	1312.4	325.2	470.4
20.34	9.43	1.90	34.0	0.70	23.8	0.59	0.34	0.00	1.00	1.00	0.00	0.00	0.59	0.34	16.50	-35.95	1312.9	325.6	471.0
20.25	9.43	1.90	34.0	0.70	23.8	0.59	0.33	0.00	1.00	1.00	0.00	0.00	0.59	0.33	16.56	-35.95	1313.4	325.9	471.6
20.16	9.43	1.89	34.0	0.70	23.8	0.58	0.33	0.00	1.00	1.00	0.00	0.00	0.58	0.33	16.61	-35.95	1313.9	326.3	472.2
20.06	9.43	1.88	34.0	0.70	23.8	0.58	0.33	0.00	1.00	1.00	0.00	0.00	0.58	0.33	16.67	-35.95	1314.4	326.6	472.8
19.97	9.43	1.88	34.0	0.70	23.8	0.58	0.33	0.00	1.00	1.00	0.00	0.00	0.58	0.33	16.73	-35.95	1314.9	327.0	473.4
19.87	9.43	1.87	34.0	0.70	23.8	0.58	0.33	0.00	1.00	1.00	0.00	0.00	0.58	0.33	16.79	-35.95	1315.5	327.3	474.0
19.78	9.43	1.87	34.0	0.70	23.8	0.58	0.33	0.00	1.00	1.00	0.00	0.00	0.58	0.33	16.85	-35.95	1316.0	327.7	474.6
19.69	9.43	1.86	34.0	0.70	23.8	0.57	0.33	0.00	1.00	1.00	0.00	0.00	0.57	0.33	16.91	-35.95	1316.5	328.0	475.2
19.59	9.43	1.86	34.0	0.70	23.8	0.57	0.33	0.00	1.00	1.00	0.00	0.00	0.57	0.33	16.96	-35.95	1317.0	328.4	475.8
19.50	9.43	1.85	34.0	0.70	23.8	0.57	0.33	0.00	1.00	1.00	0.00	0.00	0.57	0.33	17.02	-35.95	1317.5	328.7	476.4
19.40	9.43	1.85	34.0	0.70	23.8	0.57	0.33	0.00	1.00	1.00	0.00	0.00	0.57	0.33	17.08	-35.95	1318.0	329.1	477.0
19.31	9.43	1.84	34.0	0.70	23.8	0.57	0.32	0.00	1.00	1.00	0.00	0.00	0.57	0.32	17.14	-35.95	1318.5	329.4	477.6
19.21	9.43	1.83	34.0	0.70	23.8	0.57	0.32	0.00	1.00	1.00	0.00	0.00	0.57	0.32	17.20	-35.95	1319.0	329.8	478.2
19.12	9.43	1.83	34.0	0.70	23.8	0.56	0.32	0.00	1.00	1.00	0.00	0.00	0.56	0.32	17.26	-35.95	1319.5	330.1	478.8
19.03	9.43	1.82	34.0	0.70	23.8	0.56	0.32	0.00	1.00	1.00	0.00	0.00	0.56	0.32	17.31	-35.95	1320.0	330.5	479.4
18.93	9.43	1.82	34.0	0.70	23.8	0.56	0.32	0.00	1.00	1.00	0.00	0.00	0.56	0.32	17.37	-35.95	1320.5	330.8	480.0
18.84	9.43	1.81	34.0	0.70	23.8	0.56	0.32	0.00	1.00	1.00	0.00	0.00	0.56	0.32	17.43	-35.95	1321.0	331.2	480.5
18.74	9.43	1.81	34.0	0.70	23.8	0.56	0.32	0.00	1.00	1.00	0.00	0.00	0.56	0.32	17.49	-35.95	1321.5	331.5	481.1
18.65	9.43	1.80	34.0	0.70	23.8	0.56	0.32	0.00	1.00	1.00	0.00	0.00	0.56	0.32	17.55	-35.95	1322.0	331.8	481.7
18.56	9.43	1.80	34.0	0.70	23.8	0.55	0.32	0.00	1.00	1.00	0.00	0.00	0.55	0.32	17.60	-35.95	1322.5	332.2	482.3
18.46	9.43	1.79	34.0	0.70	23.8	0.55	0.32	0.00	1.00	1.00	0.00	0.00	0.55	0.32	17.66	-35.95	1323.0	332.5	482.9
18.37	9.43	1.78	34.0	0.70	23.8	0.55	0.31	0.00	1.00	1.00	0.00	0.00	0.55	0.31	17.72	-35.95	1323.5	332.9	483.4
18.27	9.43	1.78	34.0	0.70	23.8	0.55	0.31	0.00	1.00	1.00	0.00	0.00	0.55	0.31	17.78	-35.95	1324.0	333.2	484.0
18.18	9.43	1.77	34.0	0.70	23.8	0.55	0.31	0.00	1.00	1.00	0.00	0.00	0.55	0.31	17.84	-35.95	1324.4	333.5	484.6
18.08	9.43	1.77	34.0	0.70	23.8	0.55	0.31	0.00	1.00	1.00	0.00	0.00	0.55	0.31	17.90	-35.95	1324.9	333.9	485.2
17.99	9.43	1.76	34.0	0.70	23.8	0.54	0.31	0.00	1.00	1.00	0.00	0.00	0.54	0.31	17.95	-35.95	1325.4	334.2	485.7
17.90	9.43	1.76	34.0	0.70	23.8	0.54	0.31	0.00	1.00	1.00	0.00	0.00	0.54	0.31	18.01	-35.95	1325.9	334.5	486.3
17.80	9.43	1.75	34.0	0.70	23.8	0.54	0.31	0.00	1.00	1.00	0.00	0.00	0.54	0.31	18.07	-35.95	1326.4	334.9	486.9
17.71	9.43	1.75	34.0	0.70	23.8	0.54	0.31	0.00	1.00	1.00	0.00	0.00	0.54	0.31	18.13	-35.95	1326.8	335.2	487.4
17.61	9.43	1.74	34.0	0.70	23.8	0.54	0.31	0.00	1.00	1.00	0.00	0.00	0.54	0.31	18.19	-35.95	1327.3	335.5	488.0
17.52	9.43	1.73	34.0	0.70	23.8	0.54	0.31	0.00	1.00	1.00	0.00	0.00	0.54	0.31	18.25	-35.95	1327.8	335.9	488.6
17.42	9.43	1.73	34.0	0.70	23.8	0.53	0.31	0.00	1.00	1.00	0.00	0.00	0.53	0.31	18.30	-35.95	1328.3	336.2	489.1
17.33	9.43	1.72	34.0	0.70	23.8	0.53	0.30	0.00	1.00	1.00	0.00	0.00	0.53	0.30	18.36	-35.95	1328.7	336.5	489.7
17.24	9.43	1.72	34.0	0.70	23.8	0.53	0.30	0.00	1.00	1.00	0.00	0.00	0.53	0.30	18.42	-35.95	1329.2	336.8	490.2
17.14	9.43	1.71	34.0	0.70	23.8	0.53	0.30	0.00	1.00	1.00	0.00	0.00	0.53	0.30	18.48	-35.95	1329.7	337.2	490.8
17.05	9.43	1.71	34.0	0.70	23.8	0.53	0.30	0.00	1.00	1.00	0.00	0.00	0.53	0.30	18.54	-35.95	1330.2	337.5	491.3
16.95	9.43	1.70	34.0	0.70	23.8	0.53	0.30	0.00	1.00	1.00	0.00	0.00	0.53	0.30	18.60	-35.95	1330.6	337.8	491.9
16.86	9.43	1.70	34.0	0.70	23.8	0.52	0.30	0.00	1.00	1.00	0.00	0.00	0.52	0.30	18.65	-35.95	1331.1	338.1	492.4
16.77	9.43	1.69	34.0	0.70	23.8	0.52	0.30	0.00	1.00	1.00	0.00	0.00	0.52	0.30	18.71	-35.95	1331.6	338.5	493.0
16.67	9.43	1.69	34.0	0.70	23.8	0.52	0.30	0.00	1.00	1.00	0.00	0.00	0.52	0.30	18.77	-35.95	1332.0	338.8	493.5
16.58	9.43	1.68	34.0	0.70	23.8	0.52	0.30	0.00	1.00	1.00	0.00	0.00	0.52	0.30	18.83	-35.95	1332.5	339.1	494.1
16.48	9.43	1.67	34.0	0.70	23.8	0.52	0.30	0.00	1.00	1.00	0.00	0.00	0.52	0.30	18.89	-35.95	1332.9	339.4	494.6
16.39	9.43	1.67	34.0	0.70	23.8	0.52	0.29	0.00	1.00	1.00	0.00	0.00	0.52	0.29	18.95	-35.95	1333.4	339.7	495.1
16.29	9.43	1.66	34.0	0.70	23.8	0.51	0.29	0.00	1.00	1.00	0.00	0.00	0.51	0.29	19.00	-35.95	1333.8	340.1	495.7
16.20	9.43	1.66	34.0	0.70	23.8	0.51	0.29	0.00	1.00	1.00	0.00	0.00	0.51	0.29	19.06	-35.95	1334.3	340.4	496.2
16.11	9.43	1.65	34.0	0.70	23.8	0.51	0.29	0.00	1.00	1.00	0.00	0.00	0.51	0.29	19.12	-35.95	1334.8	340.7	496.7
16.01	9.43	1.65	34.0	0.70	23.8	0.51	0.29	0.00	1.00	1.00	0.00	0.00	0.51	0.29	19.18	-35.95	1335.2	341.0	497.3
15.92	9.43	1.64	34.0	0.70	23.8	0.51	0.29	0.00	1.00	1.00	0.00	0.00	0.51	0.29	19.24	-35.95	1335.7	341.3	497.8
15.82	9.43	1.64	34.0	0.70	23.8	0.50	0.29	0.00	1.00	1.00	0.00	0.00	0.50	0.29	19.30	-35.95	1336.1	341.6	498.3
15.73	9.43	1.63	34.0	0.70	23.8	0.50	0.29	0.00	1.00	1.00	0.00	0.00	0.50	0.29	19.35	-35.95	1336.5	342.0	498.9
15.64	9.43	1.62	34.0	0.70	23.8	0.50	0.29	0.00	1.00	1.00	0.00	0.00	0.50	0.29	19.41	-35.95	1337.0	342.3	499.4
15.54	9.43	1.62	34.0	0.70	23.8	0.50	0.29	0.00	1.00	1.00	0.00	0.00	0.50	0.29	19.47	-35.95	1337.4	342.6	499.9
15.45	9.43	1.61	34.0	0.70	23.8	0.50	0.28	0.00	1.00	1.00	0.00	0.00	0.50	0.28	19.53	-35.95	1337.9	342.9	500.4
15.35	9.43	1.61	34.0	0.70	23.8	0.50	0.28	0.00	1.00	1.00	0.00	0.00	0.50	0.28	19.59	-35.95	1338.3	343.2	500.9
15.26	9.43	1.60	34.0	0.70	23.8	0.49	0.28	0.00	1.00	1.00	0.00	0.00	0.49	0.28	19.65	-35.95	1338.8	343.5	501.5
15.16	9.43	1.60	34.0	0.70	23.8	0.49	0.28	0.00	1.00	1.00	0.00	0.00	0.49	0.28	19.70	-35.95	1339.2	343.8	502.0

15.07	9.43	1.59	34.0	0.70	23.8	0.49	0.28	0.00	1.00	1.00	0.00	0.00	0.49	0.28	19.76	-35.95	1339.6	344.1	502.5
14.98	9.43	1.59	34.0	0.70	23.8	0.49	0.28	0.00	1.00	1.00	0.00	0.00	0.49	0.28	19.82	-35.95	1340.1	344.4	503.0
14.88	9.43	1.58	34.0	0.70	23.8	0.49	0.28	0.00	1.00	1.00	0.00	0.00	0.49	0.28	19.88	-35.95	1340.5	344.7	503.5
14.79	9.43	1.57	34.0	0.70	23.8	0.49	0.28	0.00	1.00	1.00	0.00	0.00	0.49	0.28	19.94	-35.95	1340.9	345.1	504.0
14.69	9.43	1.57	34.0	0.70	23.8	0.48	0.28	0.00	1.00	1.00	0.00	0.00	0.48	0.28	19.99	-35.95	1341.4	345.4	504.5
14.60	9.43	1.56	34.0	0.70	23.8	0.48	0.28	0.00	1.00	1.00	0.00	0.00	0.48	0.28	20.05	-35.95	1341.8	345.7	505.0
14.51	9.43	1.56	34.0	0.70	23.8	0.48	0.27	0.00	1.00	1.00	0.00	0.00	0.48	0.27	20.11	-35.95	1342.2	346.0	505.5
14.41	9.43	1.55	34.0	0.70	23.8	0.48	0.27	0.00	1.00	1.00	0.00	0.00	0.48	0.27	20.17	-35.95	1342.6	346.3	506.0
14.32	9.43	1.55	34.0	0.70	23.8	0.48	0.27	0.00	1.00	1.00	0.00	0.00	0.48	0.27	20.23	-35.95	1343.1	346.6	506.5
14.22	9.43	1.54	34.0	0.70	23.8	0.48	0.27	0.00	1.00	1.00	0.00	0.00	0.48	0.27	20.29	-35.95	1343.5	346.9	507.0
14.13	9.43	1.54	34.0	0.70	23.8	0.47	0.27	0.00	1.00	1.00	0.00	0.00	0.47	0.27	20.34	-35.95	1343.9	347.2	507.5
14.03	9.43	1.53	34.0	0.70	23.8	0.47	0.27	0.00	1.00	1.00	0.00	0.00	0.47	0.27	20.40	-35.95	1344.3	347.5	508.0
13.94	9.43	1.52	34.0	0.70	23.8	0.47	0.27	0.00	1.00	1.00	0.00	0.00	0.47	0.27	20.46	-35.95	1344.7	347.8	508.5
13.85	9.43	1.52	34.0	0.70	23.8	0.47	0.27	0.00	1.00	1.00	0.00	0.00	0.47	0.27	20.52	-35.95	1345.2	348.1	509.0
13.75	9.43	1.51	34.0	0.70	23.8	0.47	0.27	0.00	1.00	1.00	0.00	0.00	0.47	0.27	20.58	-35.95	1345.6	348.3	509.5
13.66	9.43	1.51	34.0	0.70	23.8	0.47	0.27	0.00	1.00	1.00	0.00	0.00	0.47	0.27	20.64	-35.95	1346.0	348.6	510.0
13.56	9.43	1.50	34.0	0.70	23.8	0.46	0.27	0.00	1.00	1.00	0.00	0.00	0.46	0.27	20.69	-35.95	1346.4	348.9	510.5
13.47	9.43	1.50	34.0	0.70	23.8	0.46	0.26	0.00	1.00	1.00	0.00	0.00	0.46	0.26	20.75	-35.95	1346.8	349.2	511.0
13.37	9.43	1.49	34.0	0.70	23.8	0.46	0.26	0.00	1.00	1.00	0.00	0.00	0.46	0.26	20.81	-35.95	1347.2	349.5	511.4
13.28	9.43	1.49	34.0	0.70	23.8	0.46	0.26	0.00	1.00	1.00	0.00	0.00	0.46	0.26	20.87	-35.95	1347.6	349.8	511.9
13.19	9.43	1.48	34.0	0.70	23.8	0.46	0.26	0.00	1.00	1.00	0.00	0.00	0.46	0.26	20.93	-35.95	1348.0	350.1	512.4
13.09	9.43	1.47	34.0	0.70	23.8	0.46	0.26	0.00	1.00	1.00	0.00	0.00	0.46	0.26	20.99	-35.95	1348.4	350.4	512.9
13.00	9.43	1.46	34.0	0.70	23.8	0.45	0.26	0.00	1.00	1.00	0.00	0.00	0.45	0.26	21.09	-35.95	1348.8	350.7	513.3
12.90	9.43	1.45	34.0	0.70	23.8	0.45	0.26	0.00	1.00	1.00	0.00	0.00	0.45	0.26	21.19	-35.95	1349.2	351.0	513.8
12.81	9.43	1.44	34.0	0.70	23.8	0.44	0.25	0.00	1.00	1.00	0.00	0.00	0.44	0.25	21.29	-35.95	1349.6	351.4	514.3
12.72	9.43	1.43	34.0	0.70	23.8	0.44	0.25	0.00	1.00	1.00	0.00	0.00	0.44	0.25	21.39	-35.95	1350.0	351.7	514.7
12.62	9.43	1.42	34.0	0.70	23.8	0.44	0.25	0.00	1.00	1.00	0.00	0.00	0.44	0.25	21.49	-35.95	1350.4	352.0	515.2
12.53	9.43	1.41	34.0	0.70	23.8	0.43	0.25	0.00	1.00	1.00	0.00	0.00	0.43	0.25	21.58	-35.95	1350.8	352.3	515.7
12.43	9.43	1.40	34.0	0.70	23.8	0.43	0.25	0.00	1.00	1.00	0.00	0.00	0.43	0.25	21.68	-35.95	1351.2	352.7	516.1
12.34	9.43	1.38	34.0	0.70	23.8	0.43	0.24	0.00	1.00	1.00	0.00	0.00	0.43	0.24	21.78	-35.95	1351.6	353.0	516.6
12.24	9.43	1.37	34.0	0.70	23.8	0.42	0.24	0.00	1.00	1.00	0.00	0.00	0.42	0.24	21.88	-35.95	1351.9	353.3	517.0
12.15	9.43	1.36	34.0	0.70	23.8	0.42	0.24	0.00	1.00	1.00	0.00	0.00	0.42	0.24	21.98	-35.95	1352.3	353.6	517.4
12.06	9.43	1.35	34.0	0.70	23.8	0.42	0.24	0.00	1.00	1.00	0.00	0.00	0.42	0.24	22.08	-35.95	1352.7	353.9	517.9
11.96	9.43	1.34	0.0	0.70	0.0	0.00	0.00	0.75	1.00	1.00	-0.75	0.75	-0.75	0.75	22.18	-36.62	1352.0	354.7	517.9
11.87	9.43	1.33	0.0	0.70	0.0	0.00	0.00	0.75	1.00	1.00	-0.75	0.75	-0.75	0.75	22.28	-37.28	1351.4	355.4	517.9
11.77	9.43	1.32	0.0	0.70	0.0	0.00	0.00	0.75	1.00	1.00	-0.75	0.75	-0.75	0.75	22.38	-37.95	1350.7	356.2	517.9
11.68	9.43	1.31	0.0	0.70	0.0	0.00	0.00	0.75	1.00	1.00	-0.75	0.75	-0.75	0.75	22.48	-38.62	1350.0	357.0	517.9
11.59	9.43	1.30	0.0	0.70	0.0	0.00	0.00	0.75	1.00	1.00	-0.75	0.75	-0.75	0.75	22.58	-39.28	1349.4	357.7	517.9
11.49	9.43	1.29	0.0	0.70	0.0	0.00	0.00	0.75	1.00	1.00	-0.75	0.75	-0.75	0.75	22.68	-39.95	1348.7	358.5	517.9
11.40	9.43	1.28	0.0	0.70	0.0	0.00	0.00	0.75	1.00	1.00	-0.75	0.75	-0.75	0.75	22.78	-40.61	1348.0	359.3	517.9
11.30	9.43	1.27	0.0	0.70	0.0	0.00	0.00	0.75	1.00	1.00	-0.75	0.75	-0.75	0.75	22.88	-41.28	1347.4	360.0	517.9
11.21	9.43	1.26	0.0	0.70	0.0	0.00	0.00	0.75	1.00	1.00	-0.75	0.75	-0.75	0.75	22.98	-41.95	1346.7	360.8	517.9
11.11	9.43	1.25	0.0	0.70	0.0	0.00	0.00	0.75	1.00	1.00	-0.75	0.75	-0.75	0.75	23.08	-42.61	1346.0	361.6	517.9
11.02	9.43	1.24	0.0	0.70	0.0	0.00	0.00	0.75	1.00	1.00	-0.75	0.75	-0.75	0.75	23.18	-43.28	1345.4	362.3	517.9
10.93	9.43	1.23	0.0	0.70	0.0	0.00	0.00	0.75	1.00	1.00	-0.75	0.75	-0.75	0.75	23.28	-43.94	1344.7	363.1	517.9
10.83	9.43	1.22	0.0	0.70	0.0	0.00	0.00	0.75	1.00	1.00	-0.75	0.75	-0.75	0.75	23.38	-44.61	1344.0	363.9	517.9
10.74	9.43	1.21	0.0	0.70	0.0	0.00	0.00	0.75	1.00	1.00	-0.75	0.75	-0.75	0.75	23.48	-45.27	1343.4	364.6	517.9
10.64	9.43	1.20	0.0	0.70	0.0	0.00	0.00	0.75	1.00	1.00	-0.75	0.75	-0.75	0.75	23.58	-45.94	1342.7	365.4	517.9
10.55	9.43	1.19	0.0	0.70	0.0	0.00	0.00	0.75	1.00	1.00	-0.75	0.75	-0.75	0.75	23.68	-46.61	1342.0	366.2	517.9
10.45	9.43	1.18	0.0	0.70	0.0	0.00	0.00	0.75	1.00	1.00	-0.75	0.75	-0.75	0.75	23.78	-47.27	1341.4	366.9	517.9
10.36	9.43	1.17	0.0	0.70	0.0	0.00	0.00	0.75	1.00	1.00	-0.75	0.75	-0.75	0.75	23.88	-47.94	1340.7	367.7	517.9
10.27	9.43	1.16	0.0	0.70	0.0	0.00	0.00	0.75	1.00	1.00	-0.75	0.75	-0.75	0.75	23.98	-48.60	1340.0	368.5	517.9
10.17	9.43	1.15	0.0	0.70	0.0	0.00	0.00	0.75	1.00	1.00	-0.75	0.75	-0.75	0.75	24.08	-49.27	1339.4	369.2	517.9
10.08	9.43	1.14	0.0	0.70	0.0	0.00	0.00	0.75	1.00	1.00	-0.75	0.75	-0.75	0.75	24.18	-49.93	1338.7	370.0	517.9
9.98	9.43	1.13	0.0	0.70	0.0	0.00	0.00	0.75	1.00	1.00	-0.75	0.75	-0.75	0.75	24.28	-50.60	1338.0	370.8	517.9
9.89	9.43	1.12	0.0	0.70	0.0	0.00	0.00	0.75	1.00	1.00	-0.75	0.75	-0.75	0.75	24.38	-51.27	1337.4	371.5	517.9
9.80	9.43	1.11	0.0	0.70	0.0	0.00	0.00	0.75	1.00	1.00	-0.75	0.75	-0.75	0.75	24.48	-51.93	1336.7	372.3	517.9
9.70	9.43	1.10	0.0	0.70	0.0	0.00	0.00	0.75	1.00	1.00	-0.75	0.75	-0.75	0.75	24.58	-52.60	1336.0	373.1	517.9
9.61	9.43	1.09	0.0	0.70	0.0	0.00	0.00	0.75	1.00	1.00	-0.75	0.75	-0.75	0.75	24.68	-53.26	1335.4	373.8	517.9
9.51	9.43	1.08	0.0	0.70	0.0	0.00	0.00	0.75	1.00	1.00	-0.75	0.75	-0.75	0.75	24.78	-53.93	1334.7	374.6	517.9
9.42	9.43	1.07	0.0	0.70	0.0	0.00	0.00	0.75	1.00	1.00	-0.75	0.75	-0.75	0.75	24.88	-54.60	1334.0	375.4	517.9
9.32	9.43	1.06	0.0	0.70	0.0	0.00	0.00	0.75	1.00	1.00	-0.75	0.75	-0.75	0.75	24.98	-55.26	1333.4	376.1	517.9
9.23	9.43	1.05	0.0	0.70	0.0	0.00	0.00	0.75	1.00	1.00	-0.75	0.75	-0.75	0.75	25.08	-55.93	1332.7	376.9	517.9
9.14	9.43	1.04	0.0	0.70	0.0	0.00	0.00	0.75	1.00	1.00	-0.75	0.75	-0.75	0.75	25.18	-56.59	1332.0	377.6	517.9
9.04	9.43	1.03	0.0	0.70	0.0	0.00	0.00	0.75	1.00	1.00	-0.75	0.75	-0.75	0.75	25.28	-57.26	1331.4	378.4	517.9
8.95	9.43	1.01	0.0	0.70	0.0	0.00	0.00	0.75	1.00	1.00	-0.75	0.75	-0.75	0.75	25.38	-57.92	1330.7	379.2	517.9
8.85	9.43	1.00	0.0	0.70	0.0	0.00	0.00	0.75	1.00	1.00	-0.75	0.75	-0.75	0.75	25.48	-58.59	1330.0	379.9	517.9
8.76	9.43	0.99	0.0	0.70	0.0	0.00	0.00	0.75	1.00	1.00	-0.75	0.75	-0.75	0.75	25.58	-59.26	1329.4	380.7	517.9
8.67	9.43	0.98	0.0	0.70	0.0	0.00	0.00	0.75	1.00	1.00	-0.75	0.75	-0.75	0.75	25.68	-59.92	1328.7	381.5	517.9
8.57	9.43	0.97	0.0	0.70	0.0	0.00	0.00	0.75	1.00	1.00	-0.75	0.75	-0.75	0.75	25.78	-60.59	1328.0	382.2	517.9
8.48	9.43	0.96	0.0	0.70	0.0	0.00	0.00	0.75	1.00	1.00	-0.75	0.75	-0.75	0.75	25.88	-61.25	1327.4	383.0	517.9
8.38	9.43	0.95	0.0	0.70	0.0	0.00	0.00	0.75	1.00	1.00	-0.75	0.75	-0.75	0.75	25.98	-61.92	1326.7	383.8	517.9
8.29	9.43	0.94	0.0	0.70	0.0	0.00	0.00	0.75	1.00	1.00	-0.75	0.75	-0.75	0.75	26.08	-62.58	1326.1	384.5	517.9
8.19	9.43	0.93	0.0	0.70	0.0	0.00	0.00	0.75	1.00	1.00	-0.75	0.75	-0.75	0.75	26.18	-63.25	1325.4	385.3	517.9
8.10	9.43	0.92	0.0	0.70	0.0	0.00	0.00	0.75	1.00	1.00	-0.75	0.75	-0.75	0.75	26.28	-63.92	1324.7	386.1	517.9
8.01	9.43	0.91	0.0	0.70	0.0	0.00	0.00	0.75	1.00	1.00	-0.75	0.75	-0.75	0.75	26.38	-64.58	1324.1	386.8	517.9
7.91	9.43	0.90	0.0	0.70	0.0	0.00	0.00	0.75	1.00	1.00	-0.75	0.75	-0.75	0.75	26.48	-65.25	1323.4	387.6	517.9
7.82	9.43	0.89	0.0	0.70	0.0	0.00	0.00	0.75	1.00	1.00	-0.75	0.75	-0.75	0.75	26.58	-65.91	1322.7	388.4	517.9
7.72	9.43	0.88	0.0	0.70	0.0	0.00	0.00	0.75	1.00	1.00	-0.75	0.75	-0.75	0.75	26.68	-66.58	1322.1	389.1	517.9
7.63	9.43	0.87	0.0	0.70	0.0	0.00	0.00	0.75	1.00	1.00	-0.75	0.75	-0.75	0.75	26.78	-67.25	1321.4	389.9	517.9
7.54	9.43	0.86	0.0	0.70	0.0	0.00	0.00	0.75	1.00	1.00	-0.75	0.75	-0.75	0.75	26.88	-67.91	1320.7	390.7	517.9
7.44	9.43	0.85	0.0	0.70	0.0	0.00	0.00	0.75	1.00	1.00	-0.75	0.75	-0.75	0.75	26.98	-68.58	1320.1	391.4	517.9
7.35	9.43	0.84	0.0	0.70	0.0	0.00	0.00	0.75	1.00	1.00	-0.75	0.75	-0.75	0.75	27.08	-69.24	1319.4	392.2	517.9
7.25	9.43	0.83	0.0	0.70	0.0	0.00	0.00	0.75	1.00	1.00	-0.75	0.75	-0.75	0.75	27.18	-69.91	1318.7	393.0	517.9
7.16	9.43	0.82	0.0	0.70	0.0	0.00	0.00	0.75	1.00	1.00	-0.75	0.75	-0.75	0.75	27.28	-70.57	1318.1	393.7	517.9
7.06	9.43	0.81	0.0	0.70	0.0	0.00	0.00	0.75	1.00	1.00	-0.75	0.75	-0.75	0.75	27.38	-71.24	1317.4	394.5	517.9
6.97	9.43	0.80	0.0	0.70	0.0	0.00	0.00	0.75	1.00	1.00	-0.75	0.75	-0.75	0.75	27.48	-71.91	1316.7	395.3	517.9
6.88	9.43	0.79	0.0	0.70	0.0	0.00	0.00	0.75	1.00	1.00	-0.75	0.75	-0.75	0.75	27.58	-72.57	1316.1	396.0	517.9
6.78	9.43	0.78	0.0	0.70	0.0	0.00	0.00	0.75	1.00	1.00	-0.75	0.75	-0.75	0.75	27.68	-73.24	1315.4	396.8	517.9
6.69	9.43	0.77	0.0	0.70	0.0	0.00	0.00	0.75	1.00	1.00	-0.75	0.75	-0.75	0.75	27.78	-73.90	1314.7	397.6	517.9
6.59	9.43	0.76	0.0	0.70	0.0	0.00	0.00	0.75	1.00	1.00	-0.75	0.75	-0.75	0.75	27.87	-74.57	1314.1	398.3	517.9
6.50	9.43	0.75	0.0	0.70	0.0	0.00	0.00	0.75	1.00	1.00	-0.75	0.75	-0.75	0.75	27.97	-75.23	1313.4	399.1	517.9
6.40	9.43	0.74	0.0	0.70	0.0	0.00	0.00	0.75	1.00	1.00	-0.75	0.75	-0.75	0.75	28.07	-75.90	1312.7	399.9	517.9
6.31	9.43	0.73	0.0	0.70	0.0	0.00	0.00	0.75	1.00	1.00	-0.75	0.75	-0.75	0.75	28.17	-76.57	1312.1	400.6	517.9
6.22	9.43	0.72	0.0	0.70	0.0	0.00	0.00	0.75	1.00	1.00	-0.75	0.75	-0.75	0.75	28.27	-77.23	1311.4	401.4	517.9
6.12	9.43	0.71	0.0	0.70	0.0	0.00	0.00	0.75	1.00	1.00	-0.75	0.75	-0.75	0.75	28.37	-77.90	1310.7	402.1	517.9
6.03	9.43	0.70	0.0	0.70	0.0	0.00	0.00	0.75	1.00	1.00	-0.75	0.75	-0.75	0.75	28.47	-78.56	1310.1	402.9	517.9
5.93	9.43	0.69	0.0	0.70	0.0	0.00	0.00	0.75	1.00	1.00	-0.75	0.75	-0.75	0.75	28.57	-79.23	1309.4	403.7	517.9
5.84	9.43	0.68	0.0	0.70	0.0	0.00	0.00	0.75	1.00	1.00	-0.75	0.75	-0.75	0.75	28.67	-79.90	1308.7	404.4	517.9
5.75	9.43	0.67	0.0	0.70	0.0	0.00	0.00	0.75	1.00	1.00	-0.75	0.75	-0.75	0.75	28.77	-80.56	1308.1	405.2	517.9
5.65	9.43	0.66	0.0	0.70	0.0	0.00	0.00	0.75	1.00	1.00	-0.75	0.75	-0.75	0.75	28.87	-81.23	1307.4	406.0	517.9
5.56	9.43	0.65	0.0	0.70	0.0	0.00	0.00	0.75	1.00	1.00	-0.75	0.75	-0.75	0.75	28.97	-81.89	1306.7	406.7	517.9
5.46	9.43	0.64	0.0	0.70	0.0	0.00	0.00	0.75	1.00	1.00	-0.75	0.75	-0.75	0.75	29.07	-82.56	1306.1	407.5	517.9
5.37	9.43	0.63	0.0	0.70	0.0	0.00	0.00	0.75	1.00	1.00	-0.75	0.75	-0.75	0.75	29.17	-83.22	1305.4	408.3	517.9
5.27	9.43	0.62	0.0	0.70	0.0	0.00	0.00	0.75	1.00	1.00	-0.75	0.75	-0.75	0.75	29.27	-83.89	1304.7	409.0	517.9
5.18	9.43	0.61	0.0	0.70	0.0	0.00	0.00	0.75	1.00	1.00	-0.75	0.75	-0.75	0.75	29.37	-84.56	1304.1	409.8	517.9
5.09	9.43	0.60	0.0	0.70	0.0	0.00	0.00	0.75	1.00	1.00	-0.75	0.75	-0.75	0.75	29.47	-85.22	1303.4	410.6	517.9
4.99	9.43	0.59	0.0	0.70	0.0	0.00	0.00	0.75	1.00	1.00	-0.75	0.75	-0.75	0.75	29.57	-85.89	1302.7	411.3	517.9
4.90	9.43	0.58	0.0	0.70	0.0	0.00	0.00	0.75	1.00	1.00	-0.75	0.75	-0.75	0.75	29.67	-86.55	1302.1	412.1	517.9
4.80	9.43	0.57	0.0	0.70	0.0	0.00	0.00	0.75	1.00	1.00	-0.75	0.75	-0.75	0.75	29.77	-87.22	1301.4	412.9	517.9
4.71	9.43	0.56	0.0	0.70	0.0	0.00	0.00	0.75	1.00	1.00	-0.75	0.75	-0.75	0.75	29.87	-87.88	1300.8	413.6	517.9
4.62	9.43	0.55	0.0	0.70	0.0	0.00	0.00	0.75	1.00	1.00	-0.75	0.75	-0.75	0.75	29.97	-88.55	1300.1	414.4	517.9
4.52	9.43	0.54	0.0	0.70	0.0	0.00	0.00	0.75	1.00	1.00	-0.75	0.75	-0.75	0.75	30.07	-89.22	1299.4	415.2	517.9
4.43	9.43	0.53	0.0	0.70	0.0	0.00	0.00	0.75	1.00	1.00	0.00	0.00	0.00	0.00	30.17	-89.22	1299.4	415.3	517.9
4.33	9.43	0.52	0.0	0.70	0.0	0.00	0.00	0.75	1.00	1.00	0.00	0.00	0.00	0.00	30.27	-89.22	1299.4	415.4	517.9
4.24	9.43	0.51	0.0	0.70	0.0	0.00	0.00	0.75	1.00	1.00	0.00	0.00	0.00	0.00	30.37	-89.22	1299.4	415.5	517.9
4.14	9.43	0.50	0.0	0.70	0.0	0.00	0.00	0.75	1.00	1.00	0.00	0.00	0.00	0.00	30.47	-89.22	1299.4	415.6	517.9

4.05	9.43	0.49	0.0	0.70	0.0	0.00	0.00	0.75	1.00	1.00	0.00	0.00	0.00	0.00	30.57	-89.22	1299.4	415.7	517.9
3.96	9.43	0.48	0.0	0.70	0.0	0.00	0.00	0.75	1.00	1.00	0.00	0.00	0.00	0.00	30.67	-89.22	1299.4	415.8	517.9
3.86	9.43	0.47	0.0	0.70	0.0	0.00	0.00	0.75	1.00	1.00	0.00	0.00	0.00	0.00	30.77	-89.22	1299.4	415.9	517.9
3.77	9.43	0.46	0.0	0.70	0.0	0.00	0.00	0.75	1.00	1.00	0.00	0.00	0.00	0.00	30.87	-89.22	1299.4	416.0	517.9
3.67	9.43	0.45	0.0	0.70	0.0	0.00	0.00	0.75	1.00	1.00	0.00	0.00	0.00	0.00	30.97	-89.22	1299.4	416.1	517.9
3.58	9.43	0.44	0.0	0.70	0.0	0.00	0.00	0.75	1.00	1.00	0.00	0.00	0.00	0.00	31.07	-89.22	1299.4	416.2	517.9
3.48	9.43	0.42	0.0	0.70	0.0	0.00	0.00	0.50	1.00	1.00	0.00	0.00	0.00	0.00	31.17	-89.22	1299.4	416.3	517.9
3.39	9.43	0.41	0.0	0.70	0.0	0.00	0.00	0.50	1.00	1.00	0.00	0.00	0.00	0.00	31.27	-89.22	1299.4	416.4	517.9
3.30	9.43	0.40	0.0	0.70	0.0	0.00	0.00	0.50	1.00	1.00	0.00	0.00	0.00	0.00	31.37	-89.22	1299.4	416.5	517.9
3.20	9.43	0.39	0.0	0.70	0.0	0.00	0.00	0.50	1.00	1.00	0.00	0.00	0.00	0.00	31.47	-89.22	1299.4	416.6	517.9
3.11	9.43	0.38	0.0	0.70	0.0	0.00	0.00	0.50	1.00	1.00	0.00	0.00	0.00	0.00	31.57	-89.22	1299.4	416.7	517.9
3.01	9.43	0.37	0.0	0.70	0.0	0.00	0.00	0.50	1.00	1.00	0.00	0.00	0.00	0.00	31.67	-89.22	1299.4	416.8	517.9
2.92	9.43	0.36	0.0	0.70	0.0	0.00	0.00	0.50	1.00	1.00	0.00	0.00	0.00	0.00	31.77	-89.22	1299.4	416.9	517.9
2.83	9.43	0.34	0.0	0.70	0.0	0.00	0.00	0.50	1.00	1.00	0.00	0.00	0.00	0.00	31.87	-89.22	1299.4	417.0	517.9
2.73	9.43	0.33	0.0	0.70	0.0	0.00	0.00	0.50	1.00	1.00	0.00	0.00	0.00	0.00	31.97	-89.22	1299.4	417.1	517.9
2.64	9.43	0.32	0.0	0.70	0.0	0.00	0.00	0.50	1.00	1.00	0.00	0.00	0.00	0.00	32.07	-89.22	1299.4	417.2	517.9
2.54	9.43	0.31	0.0	0.70	0.0	0.00	0.00	0.50	1.00	1.00	0.00	0.00	0.00	0.00	32.17	-89.22	1299.4	417.3	517.9
2.45	9.43	0.30	0.0	0.70	0.0	0.00	0.00	0.50	1.00	1.00	0.00	0.00	0.00	0.00	32.27	-89.22	1299.4	417.4	517.9
2.35	9.43	0.29	0.0	0.70	0.0	0.00	0.00	0.50	1.00	1.00	0.00	0.00	0.00	0.00	32.37	-89.22	1299.4	417.5	517.9
2.26	9.43	0.28	0.0	0.70	0.0	0.00	0.00	0.50	1.00	1.00	0.00	0.00	0.00	0.00	32.47	-89.22	1299.4	417.6	517.9
2.17	9.43	0.27	0.0	0.70	0.0	0.00	0.00	0.50	1.00	1.00	0.00	0.00	0.00	0.00	32.57	-89.22	1299.4	417.7	517.9
2.07	9.43	0.25	0.0	0.70	0.0	0.00	0.00	0.50	1.00	1.00	0.00	0.00	0.00	0.00	32.67	-89.22	1299.4	417.8	517.9
1.98	9.43	0.24	0.0	0.70	0.0	0.00	0.00	0.50	1.00	1.00	0.00	0.00	0.00	0.00	32.77	-89.22	1299.4	417.9	517.9
1.88	9.43	0.23	0.0	0.70	0.0	0.00	0.00	0.50	1.00	1.00	0.00	0.00	0.00	0.00	32.87	-89.22	1299.4	418.0	517.9
1.79	9.43	0.22	0.0	0.70	0.0	0.00	0.00	0.50	1.00	1.00	0.00	0.00	0.00	0.00	32.97	-89.22	1299.4	418.1	517.9
1.70	9.43	0.21	0.0	0.70	0.0	0.00	0.00	0.50	1.00	1.00	0.00	0.00	0.00	0.00	33.07	-89.22	1299.4	418.2	517.9
1.60	9.43	0.20	0.0	0.70	0.0	0.00	0.00	0.50	1.00	1.00	0.00	0.00	0.00	0.00	33.17	-89.22	1299.4	418.3	517.9
1.51	9.43	0.19	0.0	0.70	0.0	0.00	0.00	0.50	1.00	1.00	0.00	0.00	0.00	0.00	33.27	-89.22	1299.4	418.4	517.9
1.41	9.43	0.18	0.0	0.70	0.0	0.00	0.00	0.50	1.00	1.00	0.00	0.00	0.00	0.00	33.37	-89.22	1299.4	418.5	517.9
1.32	9.43	0.16	0.0	0.70	0.0	0.00	0.00	0.50	1.00	1.00	0.00	0.00	0.00	0.00	33.47	-89.22	1299.4	418.6	517.9
1.22	9.43	0.15	0.0	0.70	0.0	0.00	0.00	0.50	1.00	1.00	0.00	0.00	0.00	0.00	33.57	-89.22	1299.4	418.7	517.9
1.13	9.43	0.14	0.0	0.70	0.0	0.00	0.00	0.50	1.00	1.00	0.00	0.00	0.00	0.00	33.67	-89.22	1299.4	418.8	517.9
1.04	9.43	0.13	0.0	0.70	0.0	0.00	0.00	0.50	1.00	1.00	0.00	0.00	0.00	0.00	33.77	-89.22	1299.4	418.9	517.9
0.94	9.43	0.12	0.0	0.70	0.0	0.00	0.00	0.50	1.00	1.00	0.00	0.00	0.00	0.00	33.87	-89.22	1299.4	419.0	517.9
0.85	9.43	0.11	0.0	0.70	0.0	0.00	0.00	0.50	1.00	1.00	0.00	0.00	0.00	0.00	33.97	-89.22	1299.4	419.1	517.9
0.75	9.43	0.10	0.0	0.70	0.0	0.00	0.00	0.50	1.00	1.00	0.00	0.00	0.00	0.00	34.06	-89.22	1299.4	419.2	517.9
0.66	9.43	0.08	0.0	0.70	0.0	0.00	0.00	0.50	1.00	1.00	0.00	0.00	0.00	0.00	34.16	-89.22	1299.4	419.3	517.9
0.57	9.43	0.07	0.0	0.70	0.0	0.00	0.00	0.50	1.00	1.00	0.00	0.00	0.00	0.00	34.26	-89.22	1299.4	419.4	517.9
0.47	9.43	0.06	0.0	0.70	0.0	0.00	0.00	0.50	1.00	1.00	0.00	0.00	0.00	0.00	34.36	-89.22	1299.4	419.5	517.9
0.38	9.43	0.05	0.0	0.70	0.0	0.00	0.00	0.50	1.00	1.00	0.00	0.00	0.00	0.00	34.46	-89.22	1299.4	419.6	517.9
0.28	9.43	0.04	0.0	0.70	0.0	0.00	0.00	0.50	1.00	1.00	0.00	0.00	0.00	0.00	34.56	-89.22	1299.4	419.7	517.9
0.19	9.43	0.03	0.0	0.70	0.0	0.00	0.00	0.50	1.00	1.00	0.00	0.00	0.00	0.00	34.66	-89.22	1299.4	419.8	517.9
0.09	9.43	0.02	0.0	0.70	0.0	0.00	0.00	0.50	1.00	1.00	0.00	0.00	0.00	0.00	34.76	-89.22	1299.4	419.9	517.9
0.00	9.43	0.01	0.0	0.70	0.0	0.00	0.00	0.50	1.00	1.00	0.00	0.00	0.00	0.00	34.86	-89.22	1299.4	420.0	517.9

SETTLEMENT based on Ultimate Loading by Vesic Method (1977):
Ztip=47.00 Btip= 3.00 Cp= 0.135 Cs= 0.211
Xpp=3.817-in Xps= 0.117-in Xtip= 3.934-in
Cp & Cs are average value at bearing stratum from pile tip extend to 4 Btip

At loading: Qtip=994.0-kp Qtop= 1299.4-kp Qside= 305.4-kp
Xtip=3.934-in Xtop= 4.164-in Xshaft= 0.230-in

LOAD - TOTAL SETTLEMENT RELATION (from t-z, and q-w curves):
Based on Vesic Method (1977)

Xtop -in	Xshaft -in	Xtip -in	Qtip -kp	Qside -kp	Qtotal -kp
0.0003	0.0003	0.0000	1.3	0.7	2.0
0.0298	0.0077	0.0221	15.6	52.0	67.6
0.0587	0.0144	0.0443	30.0	96.0	125.9
0.0870	0.0205	0.0664	44.3	133.5	177.8
0.1147	0.0261	0.0886	58.6	165.3	224.0
0.1420	0.0312	0.1107	73.0	192.1	265.1
0.1688	0.0359	0.1329	87.3	214.6	301.9
0.1954	0.0403	0.1550	101.6	233.3	334.8
0.2216	0.0444	0.1772	115.8	248.7	364.5
0.2475	0.0481	0.1993	130.0	261.3	391.3
0.2732	0.0517	0.2215	144.1	271.5	415.6
0.2987	0.0550	0.2436	158.2	279.7	437.9
0.3240	0.0582	0.2658	172.1	286.3	458.4
0.3492	0.0613	0.2879	186.0	291.4	477.4
0.3743	0.0642	0.3101	199.8	295.4	495.1
0.3992	0.0670	0.3322	213.5	298.4	511.8
0.4241	0.0697	0.3544	227.0	300.7	527.7
0.4489	0.0723	0.3765	240.5	302.3	542.8
0.4736	0.0749	0.3987	253.8	303.5	557.3
0.4983	0.0774	0.4208	267.0	304.4	571.4
0.5229	0.0799	0.4430	280.1	304.9	585.0
0.5474	0.0823	0.4651	293.0	305.2	598.2
0.5720	0.0847	0.4873	305.8	305.4	611.2
0.5965	0.0870	0.5094	318.4	305.4	623.8
0.6209	0.0893	0.5316	330.9	305.3	636.2
0.6453	0.0916	0.5537	343.3	305.1	648.4
0.6697	0.0938	0.5759	355.4	304.8	660.3
0.6940	0.0960	0.5980	367.5	304.5	671.9
0.7183	0.0981	0.6202	379.3	304.0	683.4
0.7426	0.1003	0.6423	391.0	303.5	694.6
0.7668	0.1023	0.6645	402.6	302.9	705.5
0.7910	0.1044	0.6866	414.0	302.3	716.2
0.8152	0.1064	0.7088	425.2	301.6	726.8
0.8393	0.1083	0.7309	436.2	300.8	737.0
0.8634	0.1103	0.7531	447.1	300.1	747.2
0.8874	0.1122	0.7752	457.8	299.3	757.1
0.9115	0.1141	0.7974	468.3	298.6	767.0
0.9355	0.1159	0.8195	478.7	298.1	776.8
0.9595	0.1178	0.8417	488.9	298.2	787.1
0.9835	0.1197	0.8638	498.9	297.9	796.8
1.0074	0.1214	0.8860	508.8	297.5	806.3
1.0313	0.1232	0.9081	518.5	297.1	815.6
1.0552	0.1249	0.9303	528.0	296.7	824.6
1.0790	0.1266	0.9524	537.3	296.1	833.5
1.1028	0.1282	0.9746	546.5	295.5	842.1
1.1266	0.1298	0.9967	555.6	294.9	850.4
1.1503	0.1314	1.0189	564.4	294.2	858.6
1.1740	0.1329	1.0410	573.1	293.4	866.5
1.1976	0.1345	1.0632	581.7	292.6	874.2
1.2213	0.1359	1.0853	590.1	291.7	881.8
1.2448	0.1374	1.1075	598.3	290.8	889.1
1.2684	0.1388	1.1296	606.4	289.9	896.3
1.2919	0.1401	1.1518	614.3	288.9	903.2
1.3154	0.1415	1.1739	622.1	287.9	910.1
1.3389	0.1428	1.1961	629.7	287.0	916.7
1.3623	0.1441	1.2182	637.2	286.0	923.3
1.3858	0.1454	1.2404	644.6	285.1	929.7
1.4092	0.1466	1.2625	651.8	284.2	936.0
1.4325	0.1479	1.2847	658.9	283.3	942.2

1.4559	0.1491	1.3068	665.8	282.5	948.4
1.4792	0.1503	1.3290	672.7	281.8	954.4
1.5026	0.1514	1.3511	679.3	281.1	960.4
1.5259	0.1526	1.3733	685.9	280.4	966.4
1.5492	0.1537	1.3954	692.3	279.9	972.2
1.5724	0.1548	1.4176	698.7	279.4	978.0
1.5957	0.1559	1.4397	704.9	278.9	983.8
1.6189	0.1570	1.4619	711.0	278.5	989.5
1.6421	0.1581	1.4840	716.9	278.1	995.0
1.6653	0.1591	1.5062	722.8	277.7	1000.5
1.6885	0.1602	1.5283	728.6	277.2	1005.8
1.7116	0.1612	1.5505	734.2	276.7	1010.9
1.7348	0.1621	1.5726	739.8	276.1	1015.9
1.7578	0.1631	1.5948	745.3	275.2	1020.5
1.7809	0.1639	1.6169	750.6	274.1	1024.7
1.8039	0.1648	1.6391	755.9	272.7	1028.6
1.8268	0.1656	1.6612	761.1	270.8	1031.9
1.8500	0.1666	1.6834	766.2	272.1	1038.3
1.8731	0.1675	1.7055	771.2	271.8	1043.0
1.8961	0.1684	1.7277	776.2	271.5	1047.7
1.9191	0.1693	1.7498	781.0	271.2	1052.2
1.9421	0.1702	1.7720	785.8	270.9	1056.7
1.9651	0.1710	1.7941	790.5	270.7	1061.2
1.9881	0.1718	1.8163	795.1	270.4	1065.5
2.0111	0.1726	1.8384	799.7	270.1	1069.8
2.0340	0.1734	1.8606	804.2	269.8	1074.0
2.0570	0.1742	1.8827	808.6	269.5	1078.2
2.0799	0.1750	1.9049	813.0	269.2	1082.2
2.1028	0.1758	1.9270	817.3	268.9	1086.3
2.1257	0.1766	1.9492	821.6	268.6	1090.2
2.1486	0.1773	1.9713	825.8	268.4	1094.1
2.1715	0.1780	1.9935	829.9	268.1	1098.0
2.1944	0.1788	2.0156	834.0	267.8	1101.8
2.2173	0.1795	2.0378	838.1	267.5	1105.6
2.2401	0.1802	2.0599	842.0	267.2	1109.3
2.2630	0.1809	2.0821	846.0	266.9	1112.9
2.6911	0.1926	2.4985	912.2	261.5	1173.8
3.1166	0.2017	2.9149	964.0	256.2	1220.2
3.5381	0.2067	3.3313	994.0	250.8	1244.8
3.9532	0.2055	3.7477	989.9	245.4	1235.3
4.3609	0.1967	4.1642	945.3	240.0	1185.2

At Qwork= 474.00-kp Settlement= 0.34472-in
At Qwork= 474.00-kp Secant Stiffness Kqx= 1375.02-kp/-in
At Xallow= 1.00-in Q= 803.36-kp
Note: If the program cannot find a result or the result exceeds the upper limit. The result will be displayed as 99999.

SUMMARY:

Total Ultimate Capacity (Down)= 1299.420-kp Total Ultimate Capacity (Up)= 419.956-kp
Total Allowable Capacity (Down)= 484.040-kp Total Allowable Capacity (Up)= 227.410-kp

Weight above Ground= 0.00 Total Pile Weight= 34.86-kp *Soil Weight is not included
Side Resistance (Down)= 305.397-kp Side Resistance (Up)= 385.092-kp
Tip Resistance (Down)= 994.023-kp Tip Resistance (Up)= 0.000-kp
Negative Friction, Qneg= -89.216-kp, which has been subtracted from Total Ultimate Capacity (Down)
Negative friction does not affect Total Uplift Ultimate Capacity (Up)

OK! Qallow > Q * Vertical Load, Q= 474.0 -kp

FACTOR OF SAFETY:

FSside	FStip	FSup	FSweight
2.0	3.0	2.0	1.0

* FStorsion = FSside

Notes:
* Settlement in the program is Elastic Settlement only. Consolidation Settlement is not calculated!
Length - Pile length, distance from pile top to tip (not from ground surface)
Width or D - Width of pile shaft (pile diameter)
Ds and Dl - Short Side and Long Side of Footing
Area - Section area of pile shaft or tip area of pile
Sv - Vertical stress in soils (It may be limited based on critical depth, Z_lim or Z/D
qult - Ultimate tip resistance (pressure)
Qtip_dw - Ultimate downward tip resistance (Force or Capacity)
Qtip_up - Ultimate uplift tip resistance for belled pile or uplift plate (Force or Capacity)
Torsion - Ultimate torsion resistance for single pile (Capacity)
dz - Small Segment of Depth for Calculation
Zs - Soil Depth, Depth from ground surface
Zp - Pile Depth, Depth from pile top
Prem - Primer of pile shaft
Phi - Soil internal friction angle (between soils)
Kf - Friction factor to convert Phi to Delta
Delta - Ski friction between soil and pile (function of Phi. It is different from Phi)
f_dw - Downward Resistance between soil and pile from Delta
f_up - Uplift Resistance between soil and pile from Delta
C - Soil cohesion (between soils)
Ca - Adhesion between soil and pile (function of C. It is different from C) Ca=KaKcC
Ka - Adhesion ratio, C/Ca
Kc - Adhesion factor defended by users
Ca_dw - Downward adhesion between pile and soil
Ca_up - Uplift adhesion between pile and soil
Sf_dw - Downward side resistance (sum of friction and adhesion, f_dw + Ca_dw)
Sf_up - Uplift side resistance (sum of friction and adhesion, f_up + Ca_up)
Torsion side resistance = (Sf_dw+Sf_up)/2 * pile diameter/2
Weight - Weight of Pile shaft
Qneg - negative friction Resistance
Qside - Ultimate side resistance (Qside_dw or Qside_up)
Qtip - Ultimate tip resistance (Qtip_dw or Qtip_up for uplift plate)
Q_dw - Ultimate downward capacity (Qtip + Qside_dw)
Q_up - Ultimate uplift capacity (Weight + Qside_up)
E - Elastic modules
Xs - Settlement due to axial deformation of pile shaft
Xpp - Settlement due to point load from pile tip
Xps- Settlement due to load from pile shaft
Xtop - Total settlement, Xs + Xpp + Xps
Xtip - Tip settlement, Xpp + Xps
Xshaft - Shaft deformation, Xs
Xallow - Allowable settlement specified by users
Qwork - Vertical working load applied to pile
Qallow - Vertical allowable load, Qult/F.S.

VERTICAL ANALYSIS

Figure 1

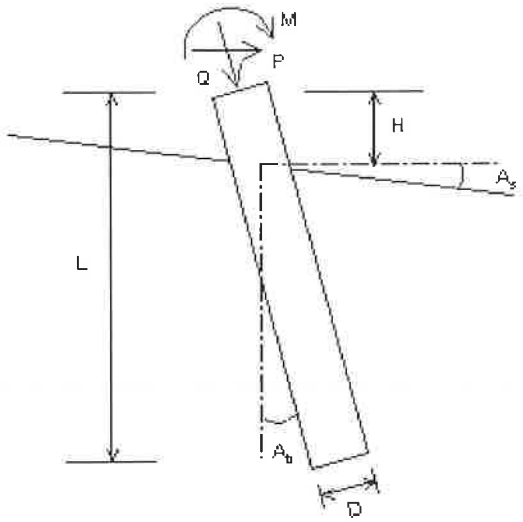

Drilled Shaft (dia >24 in. or 61 cm)

Loads:
Load Factor for Vertical Loads= 1.0
Load Factor for Lateral Loads= 1.0
Loads Supported by Pile Cap= 0 %
Shear Condition: Static

(with Load Factor)
Vertical Load, Q= 603.0 -kp

Profile:
Pile Length, L= 47.0 -ft
Top Height, H= 0 -ft
Slope Angle, As= 0
Batter Angle, Ab= 0

* Zero Friction *
Zero Friction Start: 0 -ft End: 4.5 -ft
* Negative Friction *
Negative Friction Start: 4.5 -ft End: 12 -ft with Factor: 1
Negative Friction Start: 22 -ft End: 24.5 -ft with Factor: 1

Soil Data:

Depth -ft	Gamma -lb/f3	Phi	C -kp/f2	K -lb/i3	e50 or Dr %	Nspt
0	120.0	0.0	0.500	272.0	0.92	9
3.5	108.0	0.0	0.750	276.5	0.92	9
12	120.0	34	0.00	90.6	49.45	17
13	58.7	34	0.00	64.1	52.46	19
22	70.6	0.0	1.500	921.9	0.54	22
24.5	71.1	30	1.000	1031.5	0.51	24
42	74.5	37	0.00	197.2	95.94	60

Pile Data:

Depth -ft	Width -in	Area -in2	Per. -in	I -in4	E -kp/i2	Weight -kp/f
0.0	42	1385.4	131.9	152745.0	3000	1.443
47.0						

Vertical Capacity:
Weight above Ground= 0.00 Total Weight= 47.46-kp *Soil Weight is not included
Side Resistance (Down)= 356.155-kp Side Resistance (Up)= 449.105-kp
Tip Resistance (Down)= 1352.902-kp Tip Resistance (Up)= 0.000-kp
Total Ultimate Capacity (Down) Qult= 1709.057-kp Total Ultimate Capacity (Up)= 496.569-kp
Total Allowable Capacity (Down) Qallow= 629.045-kp Total Allowable Capacity (Up) Qallow= 272.017-kp
OK! Qallow > Q

Settlement Calculation:
At Q= 603.00-kp Settlement= 0.40213-in
At Xallow= 1.00-in Q= 970.40283-kp

Note: If the program cannot find a result or the result exceeds the upper limit. The result will be displayed as 99999.

ALLOWABLE CAPACITY vs FOUNDATION DEPTH

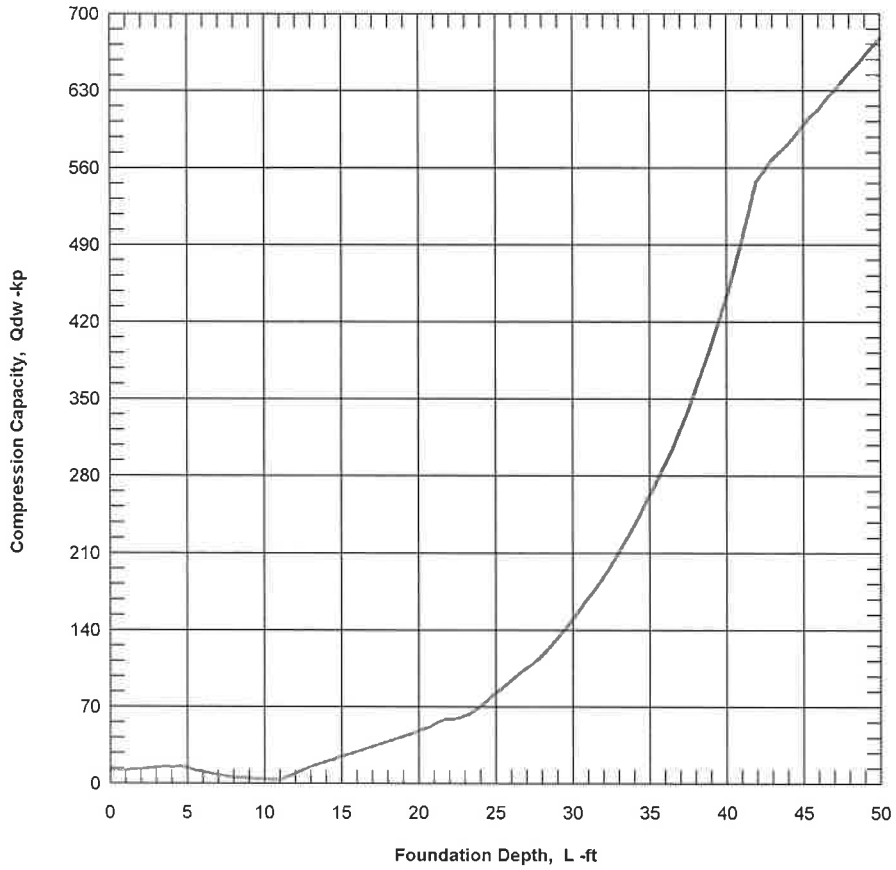

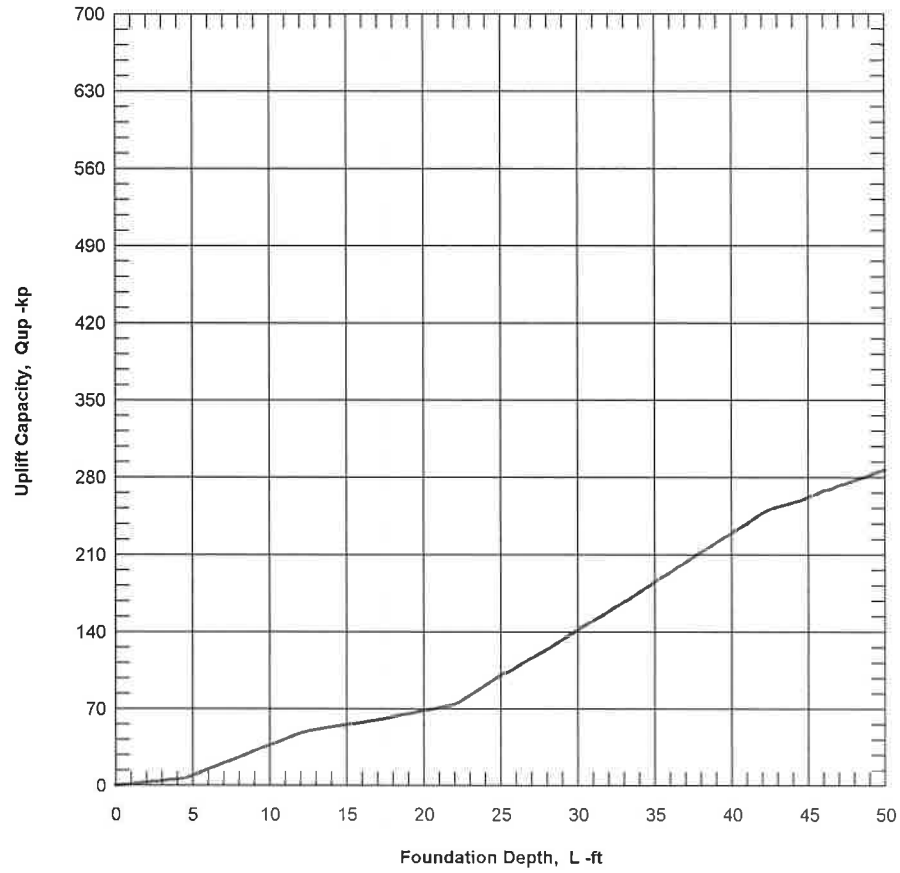

CivilTech Software

16G136 - 42-in-dia Drilled Pier
47-ft-deep; Using B-2 data

Figure 1

```
*************************************************************
                    ALLPILE 7
       VERTICAL ANALYSIS DETAILED OUTPUT
        Copyright by CivilTech Software
                www.civiltech.com
*************************************************************
Licensed to
Date: 7/8/2019  File: P:\Geotechnical\2016 Geotechnical\16G136 Alston 2 CI Bldgs Long Beach\Deep Foundation Design\Apr 28 2016\Boring B-2\42india_47ftdeep_drilled_01.alp                1.0

Title 1: 16G136 - 42-in-dia Drilled Pier
Title 2: 47-ft-deep; Using B-2 data

ALLPILE INPUT DATA:
**_____________________________________________________**

* Pile Type Page *
Unit: English
Diameter more than 24in (61cm).  For bell section, select "Belled" in Diameter Variation of Pile Section Screen. Recommendation: 2 to 4 in Item 3 of Page F.
Pile Type: Drilled Shaft (dia >24 in. or 61 cm)

* Pile Profile *
Foundation Depth: 47.0 -ft
Top Height: 0 -ft
Slope Angle: 0
Pile Angle: 0

* Pile Properties *
Zs      Width   Area    Perim.     I       E      Weight  Mix     Out     In      Other.  Type
-ft     -in     -in2    -in     -in4    -kp/i2  -kp/f   %       Side    Side    Par.
_____________________________________________________________________________________________
0.0     42      1385.4  131.9   152745.0        3000    1.443   0.0     4       4       0       Concrete (smooth)
47.0                                                                                            Pile Tip
Note:  Mix = % of Inside material/Outside material

Group Type: 0
Top Type: 1

Water Table: 13 -ft
Ground Elevation: 0 -ft

* Soil Properties *
Zs      Gamma   Phi     C       K       E50/Dr  Nspt    Type    Soil
-ft     -lb/f3  o       -kp/f2  -lb/i3   - %
0.0     120.0   0.0     0.500   272.0   0.92    9       3       Fill
3.5     108.0   0.0     0.750   276.5   0.92    9       1       Alluvium
12.0    120.0   34      0.00    90.6    49.45   17      4       Alluvium
13.0    58.7    34      0.00    64.1    52.46   19      4       Alluvium
22.0    70.6    0.0     1.500   921.9   0.54    22      2       Alluvium
24.5    71.1    30      1.000   1031.5  0.51    24      3       Alluvium
42.0    74.5    37      0.00    197.2   95.94   60      4       Alluvium

Surcharge Pressure on ground: 0 -kp/f2

* Zero Friction *
Zero Friction Start: 0 -ft      End: 4.5 -ft

* Negative Friction *
Negative Friction Start: 4.5 -ft        End: 12 -ft     with Factor: 1
Negative Friction Start: 22 -ft End: 24.5 -ft   with Factor: 1

ALLPILE ANALYSIS AND RESULTS:
**_____________________________________________________**

Pile Profile and Loading:
        Piletype: Drilled Shaft (dia >24 in. or 61 cm)
        Pile Length, L= 47.0 -ft
        Top Height, H= 0 -ft
        Slope Angle, As= 0
        Batter Angle, Ab= 0.00

        *To consider the influence of different soils below the pile tip, bearing stratum is defined
        from pile tip extending to 4 Diameter of pile, which is 14.0-ft (Input Page F, Item 3)

Single Pile, Vertical Analysis:
        Vertical Load with Load factor, Q= 603.0 -kp
        Vertical Load with Load factor and Pile Cap, Q= 603.0 -kp
          Load Factor for Vertical Loads= 1.0
          Vertical Loads Supported by Pile Cap: 0 %
          Kdown= 0.7      Kup= 0.4        Ka= 1.00


From Ztip=47.0 to 61.0-ft  Average Properties: Es= 959.90-kp/f2  C=0.00-kp/f2  Friction=37.00 Cp=0.14  Ksand=1.00
Limits of Max. tip resistance, q_lim= N/A
Batter Angle, Ab= 0.00    Batter Factor, Kbat= 1.00
Qtip_dw=1352.9-kp  based on qult=140.6-kp/f2  and Base Area=9.6-ft2
Qtip_up=0.0-kp  and Base Area=0.0-ft2


TIP RESISTANCE (Down) CALCULATION:
Tip Depth= 47.0-ft Critical Depth Ratio Z/D= 20 Critical Depth= 70.0-ft
Equivalent Width of Tip= 3.50-ft,   Tip Area= 9.62-ft2   Tip Diameter= 3.50-ft
Bearing stratum from pile tip extending to 4 Diameter of pile. Bearing stratum= 14.00-ft
Btip: width at pile tip= 3.50-ft (For group pile, it is equivalent width).
Phi & C are average value in bearing stratum.
Batter Angle= 0.00,    Batter Factor for Tip and Side= 1.00

Ztip    Z/D     Z_lim   q_lim   Width   Area'   Phi     C       Nq      Nc      Sv      qult    Qtip_dw
-ft             -ft     -kp/f2  -ft     -ft2    - o     -kp/f2                  -kp/f2  -kp/f2  -kp
_____________________________________________________________________________________________________
47.0    20.0    70.0    N/A     3.50    9.62    37.0    0.00    37.1    9.0     3.8     140.6   1352.9

 Ztip - Depth of pile tip from ground surface (Zs)
 D - Pile average diameter (below ground) for calculation of critical depth.  D=3.50-ft
 Z/D - Critical depth (for tip resistances) as ratio of depth/diameter. Vertical stress will be constant below critical depth
 Z_lim - Critical depth, calculated from Z/D (for tip resistances)
 q_lim -  Limit of Maximum tip resistance
 Btip: width or diameter at pile tip
 Bearing stratum: A stratum from  pile tip extending to some depth. Average soil properties in the stratum are used for bearing calculation


SIDE RESISTANCE (Uplift & Down) CALCULATION:
D       Z/D     Z_lim   Sf_lim  K_dw    K_up    dz
-ft             -ft     -kp/f2                  -ft
_____________________________________________________
3.50    20.0    70.00   N/A     0.7     0.4     0.094

 D - Pile average diameter for calculation of critical depth
```

Z/D - Critical depth (for side resistances) as ratio of depth/diameter. Vertical stress will be constant below critical depth
Z_lim - Critical depth calculated from Z/D (for side resistances)
Sf_lim - Limit of Maximum side resistance

Users Setting: Ka=1, which is constant. Ca=KcKaC=KcC

SIDE RESISTANCE (Up & Down) CALCULATION vs DEPTH:
Calculation is based on segment dZ= 0.09

Zs -ft	Prem -ft	Sv -kp/f2	Phi - o	Kf(<2) Delta	Delta - o	f_dw -kp/f2	f_up -kp/f2	C -kp/f2	Ka	Kc(<2) Ca	Ca_dw -kp/f2	Ca_up -kp/f2	Sf_dw -kp/f2	Sf_up -kp/f2	Weight -kp	Qneg -kp	Q_dw -kp	Q_up -kp	Torsion -kp-f
47.00	10.99	3.79	37.0	0.70	25.9	1.29	0.74	0.00	1.00	1.00	0.00	0.00	0.00	0.00	0.00	0.00	1352.9	0.0	0.0
46.91	10.99	3.78	37.0	0.70	25.9	1.29	0.73	0.00	1.00	1.00	0.00	0.00	1.29	0.73	0.08	0.00	1354.2	0.8	1.8
46.81	10.99	3.78	37.0	0.70	25.9	1.28	0.73	0.00	1.00	1.00	0.00	0.00	1.28	0.73	0.16	0.00	1355.6	1.7	3.7
46.72	10.99	3.77	37.0	0.70	25.9	1.28	0.73	0.00	1.00	1.00	0.00	0.00	1.28	0.73	0.24	0.00	1356.9	2.5	5.5
46.62	10.99	3.76	37.0	0.70	25.9	1.28	0.73	0.00	1.00	1.00	0.00	0.00	1.28	0.73	0.32	0.00	1358.2	3.4	7.3
46.53	10.99	3.76	37.0	0.70	25.9	1.28	0.73	0.00	1.00	1.00	0.00	0.00	1.28	0.73	0.40	0.00	1359.5	4.2	9.1
46.43	10.99	3.75	37.0	0.70	25.9	1.27	0.73	0.00	1.00	1.00	0.00	0.00	1.27	0.73	0.48	0.00	1360.9	5.0	10.9
46.34	10.99	3.74	37.0	0.70	25.9	1.27	0.73	0.00	1.00	1.00	0.00	0.00	1.27	0.73	0.56	0.00	1362.2	5.9	12.7
46.25	10.99	3.73	37.0	0.70	25.9	1.27	0.73	0.00	1.00	1.00	0.00	0.00	1.27	0.73	0.63	0.00	1363.5	6.7	14.5
46.15	10.99	3.73	37.0	0.70	25.9	1.27	0.72	0.00	1.00	1.00	0.00	0.00	1.27	0.72	0.71	0.00	1364.8	7.5	16.3
46.06	10.99	3.72	37.0	0.70	25.9	1.26	0.72	0.00	1.00	1.00	0.00	0.00	1.26	0.72	0.79	0.00	1366.1	8.3	18.1
45.96	10.99	3.71	37.0	0.70	25.9	1.26	0.72	0.00	1.00	1.00	0.00	0.00	1.26	0.72	0.87	0.00	1367.4	9.2	19.9
45.87	10.99	3.71	37.0	0.70	25.9	1.26	0.72	0.00	1.00	1.00	0.00	0.00	1.26	0.72	0.95	0.00	1368.7	10.0	21.7
45.78	10.99	3.70	37.0	0.70	25.9	1.26	0.72	0.00	1.00	1.00	0.00	0.00	1.26	0.72	1.03	0.00	1370.0	10.8	23.5
45.68	10.99	3.69	37.0	0.70	25.9	1.26	0.72	0.00	1.00	1.00	0.00	0.00	1.26	0.72	1.11	0.00	1371.3	11.6	25.3
45.59	10.99	3.69	37.0	0.70	25.9	1.25	0.72	0.00	1.00	1.00	0.00	0.00	1.25	0.72	1.19	0.00	1372.6	12.5	27.1
45.49	10.99	3.68	37.0	0.70	25.9	1.25	0.71	0.00	1.00	1.00	0.00	0.00	1.25	0.71	1.27	0.00	1373.9	13.3	28.9
45.40	10.99	3.67	37.0	0.70	25.9	1.25	0.71	0.00	1.00	1.00	0.00	0.00	1.25	0.71	1.35	0.00	1375.2	14.1	30.6
45.30	10.99	3.66	37.0	0.70	25.9	1.25	0.71	0.00	1.00	1.00	0.00	0.00	1.25	0.71	1.43	0.00	1376.5	14.9	32.4
45.21	10.99	3.66	37.0	0.70	25.9	1.24	0.71	0.00	1.00	1.00	0.00	0.00	1.24	0.71	1.51	0.00	1377.8	15.7	34.2
45.12	10.99	3.65	37.0	0.70	25.9	1.24	0.71	0.00	1.00	1.00	0.00	0.00	1.24	0.71	1.59	0.00	1379.1	16.5	36.0
45.02	10.99	3.64	37.0	0.70	25.9	1.24	0.71	0.00	1.00	1.00	0.00	0.00	1.24	0.71	1.67	0.00	1380.3	17.3	37.7
44.93	10.99	3.64	37.0	0.70	25.9	1.24	0.71	0.00	1.00	1.00	0.00	0.00	1.24	0.71	1.75	0.00	1381.6	18.2	39.5
44.83	10.99	3.63	37.0	0.70	25.9	1.23	0.70	0.00	1.00	1.00	0.00	0.00	1.23	0.70	1.83	0.00	1382.9	19.0	41.2
44.74	10.99	3.62	37.0	0.70	25.9	1.23	0.70	0.00	1.00	1.00	0.00	0.00	1.23	0.70	1.90	0.00	1384.2	19.8	43.0
44.65	10.99	3.62	37.0	0.70	25.9	1.23	0.70	0.00	1.00	1.00	0.00	0.00	1.23	0.70	1.98	0.00	1385.4	20.6	44.7
44.55	10.99	3.61	37.0	0.70	25.9	1.23	0.70	0.00	1.00	1.00	0.00	0.00	1.23	0.70	2.06	0.00	1386.7	21.4	46.5
44.46	10.99	3.60	37.0	0.70	25.9	1.22	0.70	0.00	1.00	1.00	0.00	0.00	1.22	0.70	2.14	0.00	1388.0	22.2	48.2
44.36	10.99	3.59	37.0	0.70	25.9	1.22	0.70	0.00	1.00	1.00	0.00	0.00	1.22	0.70	2.22	0.00	1389.2	23.0	50.0
44.27	10.99	3.59	37.0	0.70	25.9	1.22	0.70	0.00	1.00	1.00	0.00	0.00	1.22	0.70	2.30	0.00	1390.5	23.8	51.7
44.17	10.99	3.58	37.0	0.70	25.9	1.22	0.70	0.00	1.00	1.00	0.00	0.00	1.22	0.70	2.38	0.00	1391.8	24.6	53.4
44.08	10.99	3.57	37.0	0.70	25.9	1.21	0.69	0.00	1.00	1.00	0.00	0.00	1.21	0.69	2.46	0.00	1393.0	25.4	55.2
43.99	10.99	3.57	37.0	0.70	25.9	1.21	0.69	0.00	1.00	1.00	0.00	0.00	1.21	0.69	2.54	0.00	1394.3	26.2	56.9
43.89	10.99	3.56	37.0	0.70	25.9	1.21	0.69	0.00	1.00	1.00	0.00	0.00	1.21	0.69	2.62	0.00	1395.5	27.0	58.6
43.80	10.99	3.55	37.0	0.70	25.9	1.21	0.69	0.00	1.00	1.00	0.00	0.00	1.21	0.69	2.70	0.00	1396.8	27.8	60.3
43.70	10.99	3.54	37.0	0.70	25.9	1.20	0.69	0.00	1.00	1.00	0.00	0.00	1.20	0.69	2.78	0.00	1398.0	28.6	62.0
43.61	10.99	3.54	37.0	0.70	25.9	1.20	0.69	0.00	1.00	1.00	0.00	0.00	1.20	0.69	2.86	0.00	1399.3	29.4	63.7
43.52	10.99	3.53	37.0	0.70	25.9	1.20	0.69	0.00	1.00	1.00	0.00	0.00	1.20	0.69	2.94	0.00	1400.5	30.1	65.5
43.42	10.99	3.52	37.0	0.70	25.9	1.20	0.68	0.00	1.00	1.00	0.00	0.00	1.20	0.68	3.02	0.00	1401.8	30.9	67.2
43.33	10.99	3.52	37.0	0.70	25.9	1.20	0.68	0.00	1.00	1.00	0.00	0.00	1.20	0.68	3.10	0.00	1403.0	31.7	68.9
43.23	10.99	3.51	37.0	0.70	25.9	1.19	0.68	0.00	1.00	1.00	0.00	0.00	1.19	0.68	3.17	0.00	1404.2	32.5	70.6
43.14	10.99	3.50	37.0	0.70	25.9	1.19	0.68	0.00	1.00	1.00	0.00	0.00	1.19	0.68	3.25	0.00	1405.5	33.3	72.2
43.04	10.99	3.50	37.0	0.70	25.9	1.19	0.68	0.00	1.00	1.00	0.00	0.00	1.19	0.68	3.33	0.00	1406.7	34.1	73.9
42.95	10.99	3.49	37.0	0.70	25.9	1.19	0.68	0.00	1.00	1.00	0.00	0.00	1.19	0.68	3.41	0.00	1407.9	34.9	75.6
42.86	10.99	3.48	37.0	0.70	25.9	1.18	0.68	0.00	1.00	1.00	0.00	0.00	1.18	0.68	3.49	0.00	1409.1	35.6	77.3
42.76	10.99	3.47	37.0	0.70	25.9	1.18	0.67	0.00	1.00	1.00	0.00	0.00	1.18	0.67	3.57	0.00	1410.4	36.4	79.0
42.67	10.99	3.47	37.0	0.70	25.9	1.18	0.67	0.00	1.00	1.00	0.00	0.00	1.18	0.67	3.65	0.00	1411.6	37.2	80.7
42.57	10.99	3.46	37.0	0.70	25.9	1.18	0.67	0.00	1.00	1.00	0.00	0.00	1.18	0.67	3.73	0.00	1412.8	38.0	82.3
42.48	10.99	3.45	37.0	0.70	25.9	1.17	0.67	0.00	1.00	1.00	0.00	0.00	1.17	0.67	3.81	0.00	1414.0	38.7	84.0
42.38	10.99	3.45	37.0	0.70	25.9	1.17	0.67	0.00	1.00	1.00	0.00	0.00	1.17	0.67	3.89	0.00	1415.2	39.5	85.7
42.29	10.99	3.44	37.0	0.70	25.9	1.17	0.67	0.00	1.00	1.00	0.00	0.00	1.17	0.67	3.97	0.00	1416.4	40.3	87.3
42.20	10.99	3.43	37.0	0.70	25.9	1.17	0.67	0.00	1.00	1.00	0.00	0.00	1.17	0.67	4.05	0.00	1417.7	41.1	89.0
42.10	10.99	3.43	37.0	0.70	25.9	1.16	0.67	0.00	1.00	1.00	0.00	0.00	1.16	0.67	4.13	0.00	1418.9	41.8	90.7
42.01	10.99	3.42	37.0	0.70	25.9	1.16	0.66	0.00	1.00	1.00	0.00	0.00	1.16	0.66	4.21	0.00	1420.1	42.6	92.3
41.91	10.99	3.41	30.0	0.70	21.0	0.92	0.52	1.00	1.00	1.00	1.00	1.00	1.92	1.52	4.29	0.00	1422.0	44.2	95.4
41.82	10.99	3.41	30.0	0.70	21.0	0.92	0.52	1.00	1.00	1.00	1.00	1.00	1.92	1.52	4.37	0.00	1424.0	45.9	98.5
41.73	10.99	3.40	30.0	0.70	21.0	0.91	0.52	1.00	1.00	1.00	1.00	1.00	1.91	1.52	4.44	0.00	1426.0	47.6	101.7
41.63	10.99	3.39	30.0	0.70	21.0	0.91	0.52	1.00	1.00	1.00	1.00	1.00	1.91	1.52	4.52	0.00	1428.0	49.2	104.8
41.54	10.99	3.39	30.0	0.70	21.0	0.91	0.52	1.00	1.00	1.00	1.00	1.00	1.91	1.52	4.60	0.00	1430.0	50.9	107.9
41.44	10.99	3.38	30.0	0.70	21.0	0.91	0.52	1.00	1.00	1.00	1.00	1.00	1.91	1.52	4.68	0.00	1431.9	52.5	111.0
41.35	10.99	3.37	30.0	0.70	21.0	0.91	0.52	1.00	1.00	1.00	1.00	1.00	1.91	1.52	4.76	0.00	1433.9	54.2	114.1
41.25	10.99	3.37	30.0	0.70	21.0	0.90	0.52	1.00	1.00	1.00	1.00	1.00	1.90	1.52	4.84	0.00	1435.9	55.8	117.2
41.16	10.99	3.36	30.0	0.70	21.0	0.90	0.52	1.00	1.00	1.00	1.00	1.00	1.90	1.52	4.92	0.00	1437.9	57.5	120.3
41.07	10.99	3.35	30.0	0.70	21.0	0.90	0.51	1.00	1.00	1.00	1.00	1.00	1.90	1.51	5.00	0.00	1439.8	59.1	123.4
40.97	10.99	3.34	30.0	0.70	21.0	0.90	0.51	1.00	1.00	1.00	1.00	1.00	1.90	1.51	5.08	0.00	1441.8	60.8	126.4
40.88	10.99	3.34	30.0	0.70	21.0	0.90	0.51	1.00	1.00	1.00	1.00	1.00	1.90	1.51	5.16	0.00	1443.8	62.4	129.5
40.78	10.99	3.33	30.0	0.70	21.0	0.90	0.51	1.00	1.00	1.00	1.00	1.00	1.90	1.51	5.24	0.00	1445.7	64.0	132.6
40.69	10.99	3.32	30.0	0.70	21.0	0.89	0.51	1.00	1.00	1.00	1.00	1.00	1.89	1.51	5.32	0.00	1447.7	65.7	135.7
40.60	10.99	3.32	30.0	0.70	21.0	0.89	0.51	1.00	1.00	1.00	1.00	1.00	1.89	1.51	5.40	0.00	1449.6	67.3	138.8
40.50	10.99	3.31	30.0	0.70	21.0	0.89	0.51	1.00	1.00	1.00	1.00	1.00	1.89	1.51	5.48	0.00	1451.6	69.0	141.9
40.41	10.99	3.30	30.0	0.70	21.0	0.89	0.51	1.00	1.00	1.00	1.00	1.00	1.89	1.51	5.56	0.00	1453.5	70.6	144.9
40.31	10.99	3.30	30.0	0.70	21.0	0.89	0.51	1.00	1.00	1.00	1.00	1.00	1.89	1.51	5.64	0.00	1455.5	72.2	148.0
40.22	10.99	3.29	30.0	0.70	21.0	0.88	0.51	1.00	1.00	1.00	1.00	1.00	1.88	1.51	5.71	0.00	1457.5	73.9	151.1
40.12	10.99	3.28	30.0	0.70	21.0	0.88	0.50	1.00	1.00	1.00	1.00	1.00	1.88	1.50	5.79	0.00	1459.4	75.5	154.1
40.03	10.99	3.28	30.0	0.70	21.0	0.88	0.50	1.00	1.00	1.00	1.00	1.00	1.88	1.50	5.87	0.00	1461.3	77.2	157.2
39.94	10.99	3.27	30.0	0.70	21.0	0.88	0.50	1.00	1.00	1.00	1.00	1.00	1.88	1.50	5.95	0.00	1463.3	78.8	160.3
39.84	10.99	3.26	30.0	0.70	21.0	0.88	0.50	1.00	1.00	1.00	1.00	1.00	1.88	1.50	6.03	0.00	1465.2	80.4	163.3
39.75	10.99	3.26	30.0	0.70	21.0	0.88	0.50	1.00	1.00	1.00	1.00	1.00	1.88	1.50	6.11	0.00	1467.2	82.1	166.4
39.65	10.99	3.25	30.0	0.70	21.0	0.87	0.50	1.00	1.00	1.00	1.00	1.00	1.87	1.50	6.19	0.00	1469.1	83.7	169.4
39.56	10.99	3.24	30.0	0.70	21.0	0.87	0.50	1.00	1.00	1.00	1.00	1.00	1.87	1.50	6.27	0.00	1471.1	85.3	172.5
39.46	10.99	3.24	30.0	0.70	21.0	0.87	0.50	1.00	1.00	1.00	1.00	1.00	1.87	1.50	6.35	0.00	1473.0	87.0	175.5
39.37	10.99	3.23	30.0	0.70	21.0	0.87	0.50	1.00	1.00	1.00	1.00	1.00	1.87	1.50	6.43	0.00	1474.9	88.6	178.6
39.28	10.99	3.22	30.0	0.70	21.0	0.87	0.50	1.00	1.00	1.00	1.00	1.00	1.87	1.50	6.51	0.00	1476.9	90.2	181.6
39.18	10.99	3.22	30.0	0.70	21.0	0.86	0.49	1.00	1.00	1.00	1.00	1.00	1.86	1.49	6.59	0.00	1478.8	91.8	184.7
39.09	10.99	3.21	30.0	0.70	21.0	0.86	0.49	1.00	1.00	1.00	1.00	1.00	1.86	1.49	6.67	0.00	1480.7	93.5	187.7
38.99	10.99	3.20	30.0	0.70	21.0	0.86	0.49	1.00	1.00	1.00	1.00	1.00	1.86	1.49	6.75	0.00	1482.6	95.1	190.7
38.90	10.99	3.20	30.0	0.70	21.0	0.86	0.49	1.00	1.00	1.00	1.00	1.00	1.86	1.49	6.83	0.00	1484.6	96.7	193.8
38.81	10.99	3.19	30.0	0.70	21.0	0.86	0.49	1.00	1.00	1.00	1.00	1.00	1.86	1.49	6.91	0.00	1486.5	98.3	196.8
38.71	10.99	3.18	30.0	0.70	21.0	0.86	0.49	1.00	1.00	1.00	1.00	1.00	1.86	1.49	6.98	0.00	1488.4	99.9	199.8
38.62	10.99	3.18	30.0	0.70	21.0	0.85	0.49	1.00	1.00	1.00	1.00	1.00	1.85	1.49	7.06	0.00	1490.3	101.6	202.9
38.52	10.99	3.17	30.0	0.70	21.0	0.85	0.49	1.00	1.00	1.00	1.00	1.00	1.85	1.49	7.14	0.00	1492.2	103.2	205.9
38.43	10.99	3.16	30.0	0.70	21.0	0.85	0.49	1.00	1.00	1.00	1.00	1.00	1.85	1.49	7.22	0.00	1494.2	104.8	208.9
38.33	10.99	3.16	30.0	0.70	21.0	0.85	0.48	1.00	1.00	1.00	1.00	1.00	1.85	1.48	7.30	0.00	1496.1	106.4	211.9
38.24	10.99	3.15	30.0	0.70	21.0	0.85	0.48	1.00	1.00	1.00	1.00	1.00	1.85	1.48	7.38	0.00	1498.0	108.0	214.9
38.15	10.99	3.14	30.0	0.70	21.0	0.84	0.48	1.00	1.00	1.00	1.00	1.00	1.84	1.48	7.46	0.00	1499.9	109.7	218.0
38.05	10.99	3.14	30.0	0.70	21.0	0.84	0.48	1.00	1.00	1.00	1.00	1.00	1.84	1.48	7.54	0.00	1501.8	111.3	221.0
37.96	10.99	3.13	30.0	0.70	21.0	0.84	0.48	1.00	1.00	1.00	1.00	1.00	1.84	1.48	7.62	0.00	1503.7	112.9	224.0
37.86	10.99	3.12	30.0	0.70	21.0	0.84	0.48	1.00	1.00	1.00	1.00	1.00	1.84	1.48	7.70	0.00	1505.6	114.5	227.0
37.77	10.99	3.12	30.0	0.70	21.0	0.84	0.48	1.00	1.00	1.00	1.00	1.00	1.84	1.48	7.78	0.00	1507.5	116.1	230.0
37.68	10.99	3.11	30.0	0.70	21.0	0.84	0.48	1.00	1.00	1.00	1.00	1.00	1.84	1.48	7.86	0.00	1509.4	117.7	233.0
37.58	10.99	3.10	30.0	0.70	21.0	0.83	0.48	1.00	1.00	1.00	1.00	1.00	1.83	1.48	7.94	0.00	1511.3	119.3	236.0
37.49	10.99	3.10	30.0	0.70	21.0	0.83	0.48	1.00	1.00	1.00	1.00	1.00	1.83	1.48	8.02	0.00	1513.2	120.9	239.0
37.39	10.99	3.09	30.0	0.70	21.0	0.83	0.47	1.00	1.00	1.00	1.00	1.00	1.83	1.47	8.10	0.00	1515.1	122.5	242.0
37.30	10.99	3.08	30.0	0.70	21.0	0.83	0.47	1.00	1.00	1.00	1.00	1.00	1.83	1.47	8.17	0.00	1517.0	124.1	245.0
37.20	10.99	3.08	30.0	0.70	21.0	0.83	0.47	1.00	1.00	1.00	1.00	1.00	1.83	1.47	8.25	0.00	1518.9	125.7	248.0

37.11	10.99	3.07	30.0	0.70	21.0	0.83	0.47	1.00	1.00	1.00	1.00	1.00	1.83	1.47	8.33	0.00	1520.8	127.3	250.9
37.02	10.99	3.06	30.0	0.70	21.0	0.82	0.47	1.00	1.00	1.00	1.00	1.00	1.82	1.47	8.41	0.00	1522.7	128.9	253.9
36.92	10.99	3.06	30.0	0.70	21.0	0.82	0.47	1.00	1.00	1.00	1.00	1.00	1.82	1.47	8.49	0.00	1524.6	130.5	256.9
36.83	10.99	3.05	30.0	0.70	21.0	0.82	0.47	1.00	1.00	1.00	1.00	1.00	1.82	1.47	8.57	0.00	1526.4	132.1	259.9
36.73	10.99	3.04	30.0	0.70	21.0	0.82	0.47	1.00	1.00	1.00	1.00	1.00	1.82	1.47	8.65	0.00	1528.3	133.7	262.9
36.64	10.99	3.04	30.0	0.70	21.0	0.82	0.47	1.00	1.00	1.00	1.00	1.00	1.82	1.47	8.73	0.00	1530.2	135.3	265.8
36.55	10.99	3.03	30.0	0.70	21.0	0.81	0.47	1.00	1.00	1.00	1.00	1.00	1.81	1.47	8.81	0.00	1532.1	136.9	268.8
36.45	10.99	3.02	30.0	0.70	21.0	0.81	0.46	1.00	1.00	1.00	1.00	1.00	1.81	1.46	8.89	0.00	1534.0	138.5	271.8
36.36	10.99	3.02	30.0	0.70	21.0	0.81	0.46	1.00	1.00	1.00	1.00	1.00	1.81	1.46	8.97	0.00	1535.8	140.1	274.7
36.26	10.99	3.01	30.0	0.70	21.0	0.81	0.46	1.00	1.00	1.00	1.00	1.00	1.81	1.46	9.05	0.00	1537.7	141.7	277.7
36.17	10.99	3.00	30.0	0.70	21.0	0.81	0.46	1.00	1.00	1.00	1.00	1.00	1.81	1.46	9.13	0.00	1539.6	143.3	280.6
36.07	10.99	3.00	30.0	0.70	21.0	0.81	0.46	1.00	1.00	1.00	1.00	1.00	1.81	1.46	9.21	0.00	1541.4	144.9	283.6
35.98	10.99	2.99	30.0	0.70	21.0	0.80	0.46	1.00	1.00	1.00	1.00	1.00	1.80	1.46	9.29	0.00	1543.3	146.5	286.6
35.89	10.99	2.98	30.0	0.70	21.0	0.80	0.46	1.00	1.00	1.00	1.00	1.00	1.80	1.46	9.37	0.00	1545.2	148.1	289.5
35.79	10.99	2.98	30.0	0.70	21.0	0.80	0.46	1.00	1.00	1.00	1.00	1.00	1.80	1.46	9.44	0.00	1547.0	149.7	292.5
35.70	10.99	2.97	30.0	0.70	21.0	0.80	0.46	1.00	1.00	1.00	1.00	1.00	1.80	1.46	9.52	0.00	1548.9	151.3	295.4
35.60	10.99	2.96	30.0	0.70	21.0	0.80	0.45	1.00	1.00	1.00	1.00	1.00	1.80	1.45	9.60	0.00	1550.8	152.8	298.4
35.51	10.99	2.96	30.0	0.70	21.0	0.79	0.45	1.00	1.00	1.00	1.00	1.00	1.79	1.45	9.68	0.00	1552.6	154.4	301.3
35.41	10.99	2.95	30.0	0.70	21.0	0.79	0.45	1.00	1.00	1.00	1.00	1.00	1.79	1.45	9.76	0.00	1554.5	156.0	304.2
35.32	10.99	2.94	30.0	0.70	21.0	0.79	0.45	1.00	1.00	1.00	1.00	1.00	1.79	1.45	9.84	0.00	1556.3	157.6	307.2
35.23	10.99	2.94	30.0	0.70	21.0	0.79	0.45	1.00	1.00	1.00	1.00	1.00	1.79	1.45	9.92	0.00	1558.2	159.2	310.1
35.13	10.99	2.93	30.0	0.70	21.0	0.79	0.45	1.00	1.00	1.00	1.00	1.00	1.79	1.45	10.00	0.00	1560.0	160.8	313.0
35.04	10.99	2.92	30.0	0.70	21.0	0.79	0.45	1.00	1.00	1.00	1.00	1.00	1.79	1.45	10.08	0.00	1561.9	162.3	316.0
34.94	10.99	2.92	30.0	0.70	21.0	0.78	0.45	1.00	1.00	1.00	1.00	1.00	1.78	1.45	10.16	0.00	1563.7	163.9	318.9
34.85	10.99	2.91	30.0	0.70	21.0	0.78	0.45	1.00	1.00	1.00	1.00	1.00	1.78	1.45	10.24	0.00	1565.6	165.5	321.8
34.76	10.99	2.90	30.0	0.70	21.0	0.78	0.45	1.00	1.00	1.00	1.00	1.00	1.78	1.45	10.32	0.00	1567.4	167.1	324.7
34.66	10.99	2.90	30.0	0.70	21.0	0.78	0.44	1.00	1.00	1.00	1.00	1.00	1.78	1.44	10.40	0.00	1569.3	168.6	327.7
34.57	10.99	2.89	30.0	0.70	21.0	0.78	0.44	1.00	1.00	1.00	1.00	1.00	1.78	1.44	10.48	0.00	1571.1	170.2	330.6
34.47	10.99	2.88	30.0	0.70	21.0	0.77	0.44	1.00	1.00	1.00	1.00	1.00	1.77	1.44	10.56	0.00	1572.9	171.8	333.5
34.38	10.99	2.88	30.0	0.70	21.0	0.77	0.44	1.00	1.00	1.00	1.00	1.00	1.77	1.44	10.64	0.00	1574.8	173.4	336.4
34.28	10.99	2.87	30.0	0.70	21.0	0.77	0.44	1.00	1.00	1.00	1.00	1.00	1.77	1.44	10.71	0.00	1576.6	174.9	339.3
34.19	10.99	2.86	30.0	0.70	21.0	0.77	0.44	1.00	1.00	1.00	1.00	1.00	1.77	1.44	10.79	0.00	1578.4	176.5	342.2
34.10	10.99	2.86	30.0	0.70	21.0	0.77	0.44	1.00	1.00	1.00	1.00	1.00	1.77	1.44	10.87	0.00	1580.3	178.1	345.1
34.00	10.99	2.85	30.0	0.70	21.0	0.77	0.44	1.00	1.00	1.00	1.00	1.00	1.77	1.44	10.95	0.00	1582.1	179.6	348.0
33.91	10.99	2.84	30.0	0.70	21.0	0.76	0.44	1.00	1.00	1.00	1.00	1.00	1.76	1.44	11.03	0.00	1583.9	181.2	350.9
33.81	10.99	2.84	30.0	0.70	21.0	0.76	0.44	1.00	1.00	1.00	1.00	1.00	1.76	1.44	11.11	0.00	1585.7	182.8	353.8
33.72	10.99	2.83	30.0	0.70	21.0	0.76	0.43	1.00	1.00	1.00	1.00	1.00	1.76	1.43	11.19	0.00	1587.6	184.3	356.7
33.63	10.99	2.82	30.0	0.70	21.0	0.76	0.43	1.00	1.00	1.00	1.00	1.00	1.76	1.43	11.27	0.00	1589.4	185.9	359.6
33.53	10.99	2.82	30.0	0.70	21.0	0.76	0.43	1.00	1.00	1.00	1.00	1.00	1.76	1.43	11.35	0.00	1591.2	187.5	362.5
33.44	10.99	2.81	30.0	0.70	21.0	0.75	0.43	1.00	1.00	1.00	1.00	1.00	1.75	1.43	11.43	0.00	1593.0	189.0	365.4
33.34	10.99	2.80	30.0	0.70	21.0	0.75	0.43	1.00	1.00	1.00	1.00	1.00	1.75	1.43	11.51	0.00	1594.8	190.6	368.2
33.25	10.99	2.80	30.0	0.70	21.0	0.75	0.43	1.00	1.00	1.00	1.00	1.00	1.75	1.43	11.59	0.00	1596.6	192.1	371.1
33.15	10.99	2.79	30.0	0.70	21.0	0.75	0.43	1.00	1.00	1.00	1.00	1.00	1.75	1.43	11.67	0.00	1598.5	193.7	374.0
33.06	10.99	2.78	30.0	0.70	21.0	0.75	0.43	1.00	1.00	1.00	1.00	1.00	1.75	1.43	11.75	0.00	1600.3	195.3	376.9
32.97	10.99	2.78	30.0	0.70	21.0	0.75	0.43	1.00	1.00	1.00	1.00	1.00	1.75	1.43	11.83	0.00	1602.1	196.8	379.8
32.87	10.99	2.77	30.0	0.70	21.0	0.74	0.43	1.00	1.00	1.00	1.00	1.00	1.74	1.43	11.91	0.00	1603.9	198.4	382.6
32.78	10.99	2.76	30.0	0.70	21.0	0.74	0.42	1.00	1.00	1.00	1.00	1.00	1.74	1.42	11.98	0.00	1605.7	199.9	385.5
32.68	10.99	2.76	30.0	0.70	21.0	0.74	0.42	1.00	1.00	1.00	1.00	1.00	1.74	1.42	12.06	0.00	1607.5	201.5	388.4
32.59	10.99	2.75	30.0	0.70	21.0	0.74	0.42	1.00	1.00	1.00	1.00	1.00	1.74	1.42	12.14	0.00	1609.3	203.0	391.2
32.49	10.99	2.74	30.0	0.70	21.0	0.74	0.42	1.00	1.00	1.00	1.00	1.00	1.74	1.42	12.22	0.00	1611.1	204.6	394.1
32.40	10.99	2.74	30.0	0.70	21.0	0.74	0.42	1.00	1.00	1.00	1.00	1.00	1.74	1.42	12.30	0.00	1612.9	206.1	396.9
32.31	10.99	2.73	30.0	0.70	21.0	0.73	0.42	1.00	1.00	1.00	1.00	1.00	1.73	1.42	12.38	0.00	1614.7	207.7	399.8
32.21	10.99	2.72	30.0	0.70	21.0	0.73	0.42	1.00	1.00	1.00	1.00	1.00	1.73	1.42	12.46	0.00	1616.5	209.2	402.6
32.12	10.99	2.72	30.0	0.70	21.0	0.73	0.42	1.00	1.00	1.00	1.00	1.00	1.73	1.42	12.54	0.00	1618.3	210.8	405.5
32.02	10.99	2.71	30.0	0.70	21.0	0.73	0.42	1.00	1.00	1.00	1.00	1.00	1.73	1.42	12.62	0.00	1620.0	212.3	408.3
31.93	10.99	2.70	30.0	0.70	21.0	0.73	0.41	1.00	1.00	1.00	1.00	1.00	1.73	1.41	12.70	0.00	1621.8	213.9	411.2
31.84	10.99	2.70	30.0	0.70	21.0	0.72	0.41	1.00	1.00	1.00	1.00	1.00	1.72	1.41	12.78	0.00	1623.6	215.4	414.0
31.74	10.99	2.69	30.0	0.70	21.0	0.72	0.41	1.00	1.00	1.00	1.00	1.00	1.72	1.41	12.86	0.00	1625.4	216.9	416.9
31.65	10.99	2.68	30.0	0.70	21.0	0.72	0.41	1.00	1.00	1.00	1.00	1.00	1.72	1.41	12.94	0.00	1627.2	218.5	419.7
31.55	10.99	2.68	30.0	0.70	21.0	0.72	0.41	1.00	1.00	1.00	1.00	1.00	1.72	1.41	13.02	0.00	1629.0	220.0	422.5
31.46	10.99	2.67	30.0	0.70	21.0	0.72	0.41	1.00	1.00	1.00	1.00	1.00	1.72	1.41	13.10	0.00	1630.7	221.6	425.4
31.36	10.99	2.66	30.0	0.70	21.0	0.72	0.41	1.00	1.00	1.00	1.00	1.00	1.72	1.41	13.18	0.00	1632.5	223.1	428.2
31.27	10.99	2.66	30.0	0.70	21.0	0.71	0.41	1.00	1.00	1.00	1.00	1.00	1.71	1.41	13.25	0.00	1634.3	224.6	431.0
31.18	10.99	2.65	30.0	0.70	21.0	0.71	0.41	1.00	1.00	1.00	1.00	1.00	1.71	1.41	13.33	0.00	1636.1	226.2	433.8
31.08	10.99	2.64	30.0	0.70	21.0	0.71	0.41	1.00	1.00	1.00	1.00	1.00	1.71	1.41	13.41	0.00	1637.8	227.7	436.7
30.99	10.99	2.64	30.0	0.70	21.0	0.71	0.40	1.00	1.00	1.00	1.00	1.00	1.71	1.40	13.49	0.00	1639.6	229.2	439.5
30.89	10.99	2.63	30.0	0.70	21.0	0.71	0.40	1.00	1.00	1.00	1.00	1.00	1.71	1.40	13.57	0.00	1641.4	230.8	442.3
30.80	10.99	2.62	30.0	0.70	21.0	0.70	0.40	1.00	1.00	1.00	1.00	1.00	1.70	1.40	13.65	0.00	1643.1	232.3	445.1
30.71	10.99	2.62	30.0	0.70	21.0	0.70	0.40	1.00	1.00	1.00	1.00	1.00	1.70	1.40	13.73	0.00	1644.9	233.8	447.9
30.61	10.99	2.61	30.0	0.70	21.0	0.70	0.40	1.00	1.00	1.00	1.00	1.00	1.70	1.40	13.81	0.00	1646.7	235.4	450.7
30.52	10.99	2.60	30.0	0.70	21.0	0.70	0.40	1.00	1.00	1.00	1.00	1.00	1.70	1.40	13.89	0.00	1648.4	236.9	453.5
30.42	10.99	2.59	30.0	0.70	21.0	0.70	0.40	1.00	1.00	1.00	1.00	1.00	1.70	1.40	13.97	0.00	1650.2	238.4	456.3
30.33	10.99	2.59	30.0	0.70	21.0	0.70	0.40	1.00	1.00	1.00	1.00	1.00	1.70	1.40	14.05	0.00	1651.9	239.9	459.1
30.23	10.99	2.58	30.0	0.70	21.0	0.69	0.40	1.00	1.00	1.00	1.00	1.00	1.69	1.40	14.13	0.00	1653.7	241.5	461.9
30.14	10.99	2.57	30.0	0.70	21.0	0.69	0.40	1.00	1.00	1.00	1.00	1.00	1.69	1.40	14.21	0.00	1655.4	243.0	464.7
30.05	10.99	2.57	30.0	0.70	21.0	0.69	0.39	1.00	1.00	1.00	1.00	1.00	1.69	1.39	14.29	0.00	1657.2	244.5	467.5
29.95	10.99	2.56	30.0	0.70	21.0	0.69	0.39	1.00	1.00	1.00	1.00	1.00	1.69	1.39	14.37	0.00	1658.9	246.0	470.3
29.86	10.99	2.55	30.0	0.70	21.0	0.69	0.39	1.00	1.00	1.00	1.00	1.00	1.69	1.39	14.45	0.00	1660.7	247.6	473.1
29.76	10.99	2.55	30.0	0.70	21.0	0.68	0.39	1.00	1.00	1.00	1.00	1.00	1.68	1.39	14.52	0.00	1662.4	249.1	475.9
29.67	10.99	2.54	30.0	0.70	21.0	0.68	0.39	1.00	1.00	1.00	1.00	1.00	1.68	1.39	14.60	0.00	1664.2	250.6	478.7
29.58	10.99	2.53	30.0	0.70	21.0	0.68	0.39	1.00	1.00	1.00	1.00	1.00	1.68	1.39	14.68	0.00	1665.9	252.1	481.5
29.48	10.99	2.53	30.0	0.70	21.0	0.68	0.39	1.00	1.00	1.00	1.00	1.00	1.68	1.39	14.76	0.00	1667.6	253.6	484.2
29.39	10.99	2.52	30.0	0.70	21.0	0.68	0.39	1.00	1.00	1.00	1.00	1.00	1.68	1.39	14.84	0.00	1669.4	255.1	487.0
29.29	10.99	2.51	30.0	0.70	21.0	0.68	0.39	1.00	1.00	1.00	1.00	1.00	1.68	1.39	14.92	0.00	1671.1	256.7	489.8
29.20	10.99	2.51	30.0	0.70	21.0	0.67	0.39	1.00	1.00	1.00	1.00	1.00	1.67	1.39	15.00	0.00	1672.8	258.2	492.6
29.10	10.99	2.50	30.0	0.70	21.0	0.67	0.38	1.00	1.00	1.00	1.00	1.00	1.67	1.38	15.08	0.00	1674.6	259.7	495.3
29.01	10.99	2.49	30.0	0.70	21.0	0.67	0.38	1.00	1.00	1.00	1.00	1.00	1.67	1.38	15.16	0.00	1676.3	261.2	498.1
28.92	10.99	2.49	30.0	0.70	21.0	0.67	0.38	1.00	1.00	1.00	1.00	1.00	1.67	1.38	15.24	0.00	1678.0	262.7	500.8
28.82	10.99	2.48	30.0	0.70	21.0	0.67	0.38	1.00	1.00	1.00	1.00	1.00	1.67	1.38	15.32	0.00	1679.8	264.2	503.6
28.73	10.99	2.47	30.0	0.70	21.0	0.66	0.38	1.00	1.00	1.00	1.00	1.00	1.66	1.38	15.40	0.00	1681.5	265.7	506.4
28.63	10.99	2.47	30.0	0.70	21.0	0.66	0.38	1.00	1.00	1.00	1.00	1.00	1.66	1.38	15.48	0.00	1683.2	267.2	509.1
28.54	10.99	2.46	30.0	0.70	21.0	0.66	0.38	1.00	1.00	1.00	1.00	1.00	1.66	1.38	15.56	0.00	1684.9	268.7	511.9
28.44	10.99	2.45	30.0	0.70	21.0	0.66	0.38	1.00	1.00	1.00	1.00	1.00	1.66	1.38	15.64	0.00	1686.6	270.2	514.6
28.35	10.99	2.45	30.0	0.70	21.0	0.66	0.38	1.00	1.00	1.00	1.00	1.00	1.66	1.38	15.71	0.00	1688.4	271.7	517.4
28.26	10.99	2.44	30.0	0.70	21.0	0.66	0.37	1.00	1.00	1.00	1.00	1.00	1.66	1.37	15.79	0.00	1690.1	273.2	520.1
28.16	10.99	2.43	30.0	0.70	21.0	0.65	0.37	1.00	1.00	1.00	1.00	1.00	1.65	1.37	15.87	0.00	1691.8	274.7	522.9
28.07	10.99	2.43	30.0	0.70	21.0	0.65	0.37	1.00	1.00	1.00	1.00	1.00	1.65	1.37	15.95	0.00	1693.5	276.2	525.6
27.97	10.99	2.42	30.0	0.70	21.0	0.65	0.37	1.00	1.00	1.00	1.00	1.00	1.65	1.37	16.03	0.00	1695.2	277.7	528.3
27.88	10.99	2.41	30.0	0.70	21.0	0.65	0.37	1.00	1.00	1.00	1.00	1.00	1.65	1.37	16.11	0.00	1696.9	279.2	531.1
27.79	10.99	2.41	30.0	0.70	21.0	0.65	0.37	1.00	1.00	1.00	1.00	1.00	1.65	1.37	16.19	0.00	1698.6	280.7	533.8
27.69	10.99	2.40	30.0	0.70	21.0	0.65	0.37	1.00	1.00	1.00	1.00	1.00	1.65	1.37	16.27	0.00	1700.3	282.2	536.5
27.60	10.99	2.39	30.0	0.70	21.0	0.64	0.37	1.00	1.00	1.00	1.00	1.00	1.64	1.37	16.35	0.00	1702.0	283.7	539.2
27.50	10.99	2.39	30.0	0.70	21.0	0.64	0.37	1.00	1.00	1.00	1.00	1.00	1.64	1.37	16.43	0.00	1703.7	285.2	542.0
27.41	10.99	2.38	30.0	0.70	21.0	0.64	0.37	1.00	1.00	1.00	1.00	1.00	1.64	1.37	16.51	0.00	1705.4	286.7	544.7
27.31	10.99	2.37	30.0	0.70	21.0	0.64	0.36	1.00	1.00	1.00	1.00	1.00	1.64	1.36	16.59	0.00	1707.1	288.2	547.4
27.22	10.99	2.37	30.0	0.70	21.0	0.64	0.36	1.00	1.00	1.00	1.00	1.00	1.64	1.36	16.67	0.00	1708.8	289.7	550.1
27.13	10.99	2.36	30.0	0.70	21.0	0.63	0.36	1.00	1.00	1.00	1.00	1.00	1.63	1.36	16.75	0.00	1710.5	291.2	552.8
27.03	10.99	2.35	30.0	0.70	21.0	0.63	0.36	1.00	1.00	1.00	1.00	1.00	1.63	1.36	16.83	0.00	1712.2	292.7	555.6
26.94	10.99	2.35	30.0	0.70	21.0	0.63	0.36	1.00	1.00	1.00	1.00	1.00	1.63	1.36	16.91	0.00	1713.9	294.2	558.3
26.84	10.99	2.34	30.0	0.70	21.0	0.63	0.36	1.00	1.00	1.00	1.00	1.00	1.63	1.36	16.98	0.00	1715.6	295.7	561.0
26.75	10.99	2.33	30.0	0.70	21.0	0.63	0.36	1.00	1.00	1.00	1.00	1.00	1.63	1.36	17.06	0.00	1717.3	297.1	563.7
26.66	10.99	2.33	30.0	0.70	21.0	0.63	0.36	1.00	1.00	1.00	1.00	1.00	1.63	1.36	17.14	0.00	1718.9	298.6	566.4
26.56	10.99	2.32	30.0	0.70	21.0	0.62	0.36	1.00	1.00	1.00	1.00	1.00	1.62	1.36	17.22	0.00	1720.6	300.1	569.1
26.47	10.99	2.31	30.0	0.70	21.0	0.62	0.36	1.00	1.00	1.00	1.00	1.00	1.62	1.36	17.30	0.00	1722.3	301.6	571.8
26.37	10.99	2.31	30.0	0.70	21.0	0.62	0.35	1.00	1.00	1.00	1.00	1.00	1.62	1.35	17.38	0.00	1724.0	303.1	574.5
26.28	10.99	2.30	30.0	0.70	21.0	0.62	0.35	1.00	1.00	1.00	1.00	1.00	1.62	1.35	17.46	0.00	1725.6	304.6	577.2
26.18	10.99	2.29	30.0	0.70	21.0	0.62	0.35	1.00	1.00	1.00	1.00	1.00	1.62	1.35	17.54	0.00	1727.3	306.0	579.8

26.09	10.99	2.29	30.0	0.70	21.0	0.61	0.35	1.00	1.00	1.00	1.00	1.00	1.61	1.35	17.62	0.00	1729.0	307.5	582.5
26.00	10.99	2.28	30.0	0.70	21.0	0.61	0.35	1.00	1.00	1.00	1.00	1.00	1.61	1.35	17.70	0.00	1730.7	309.0	585.2
25.90	10.99	2.27	30.0	0.70	21.0	0.61	0.35	1.00	1.00	1.00	1.00	1.00	1.61	1.35	17.78	0.00	1732.3	310.5	587.9
25.81	10.99	2.27	30.0	0.70	21.0	0.61	0.35	1.00	1.00	1.00	1.00	1.00	1.61	1.35	17.86	0.00	1734.0	311.9	590.6
25.71	10.99	2.26	30.0	0.70	21.0	0.61	0.35	1.00	1.00	1.00	1.00	1.00	1.61	1.35	17.94	0.00	1735.7	313.4	593.2
25.62	10.99	2.25	30.0	0.70	21.0	0.61	0.35	1.00	1.00	1.00	1.00	1.00	1.61	1.35	18.02	0.00	1737.3	314.9	595.9
25.53	10.99	2.25	30.0	0.70	21.0	0.60	0.34	1.00	1.00	1.00	1.00	1.00	1.60	1.34	18.10	0.00	1739.0	316.4	598.6
25.43	10.99	2.24	30.0	0.70	21.0	0.60	0.34	1.00	1.00	1.00	1.00	1.00	1.60	1.34	18.18	0.00	1740.6	317.8	601.3
25.34	10.99	2.23	30.0	0.70	21.0	0.60	0.34	1.00	1.00	1.00	1.00	1.00	1.60	1.34	18.25	0.00	1742.3	319.3	603.9
25.24	10.99	2.23	30.0	0.70	21.0	0.60	0.34	1.00	1.00	1.00	1.00	1.00	1.60	1.34	18.33	0.00	1743.9	320.8	606.6
25.15	10.99	2.22	30.0	0.70	21.0	0.60	0.34	1.00	1.00	1.00	1.00	1.00	1.60	1.34	18.41	0.00	1745.6	322.2	609.2
25.05	10.99	2.21	30.0	0.70	21.0	0.59	0.34	1.00	1.00	1.00	1.00	1.00	1.59	1.34	18.49	0.00	1747.3	323.7	611.9
24.96	10.99	2.21	30.0	0.70	21.0	0.59	0.34	1.00	1.00	1.00	1.00	1.00	1.59	1.34	18.57	0.00	1748.9	325.2	614.6
24.87	10.99	2.20	30.0	0.70	21.0	0.59	0.34	1.00	1.00	1.00	1.00	1.00	1.59	1.34	18.65	0.00	1750.6	326.6	617.2
24.77	10.99	2.19	30.0	0.70	21.0	0.59	0.34	1.00	1.00	1.00	1.00	1.00	1.59	1.34	18.73	0.00	1752.2	328.1	619.9
24.68	10.99	2.19	30.0	0.70	21.0	0.59	0.34	1.00	1.00	1.00	1.00	1.00	1.59	1.34	18.81	0.00	1753.8	329.6	622.5
24.58	10.99	2.18	30.0	0.70	21.0	0.59	0.33	1.00	1.00	1.00	1.00	1.00	1.59	1.33	18.89	0.00	1755.5	331.0	625.1
24.49	10.99	2.17	0.0	0.70	0.0	0.00	0.00	1.50	1.00	1.00	-1.50	1.50	-1.50	1.50	18.97	-1.55	1753.9	332.7	625.1
24.39	10.99	2.17	0.0	0.70	0.0	0.00	0.00	1.50	1.00	1.00	-1.50	1.50	-1.50	1.50	19.05	-3.11	1752.4	334.3	625.1
24.30	10.99	2.16	0.0	0.70	0.0	0.00	0.00	1.50	1.00	1.00	-1.50	1.50	-1.50	1.50	19.13	-4.66	1750.8	335.9	625.1
24.21	10.99	2.15	0.0	0.70	0.0	0.00	0.00	1.50	1.00	1.00	-1.50	1.50	-1.50	1.50	19.21	-6.21	1749.3	337.5	625.1
24.11	10.99	2.15	0.0	0.70	0.0	0.00	0.00	1.50	1.00	1.00	-1.50	1.50	-1.50	1.50	19.29	-7.76	1747.7	339.2	625.1
24.02	10.99	2.14	0.0	0.70	0.0	0.00	0.00	1.50	1.00	1.00	-1.50	1.50	-1.50	1.50	19.37	-9.32	1746.2	340.8	625.1
23.92	10.99	2.13	0.0	0.70	0.0	0.00	0.00	1.50	1.00	1.00	-1.50	1.50	-1.50	1.50	19.45	-10.87	1744.6	342.4	625.1
23.83	10.99	2.13	0.0	0.70	0.0	0.00	0.00	1.50	1.00	1.00	-1.50	1.50	-1.50	1.50	19.52	-12.42	1743.1	344.1	625.1
23.74	10.99	2.12	0.0	0.70	0.0	0.00	0.00	1.50	1.00	1.00	-1.50	1.50	-1.50	1.50	19.60	-13.98	1741.5	345.7	625.1
23.64	10.99	2.11	0.0	0.70	0.0	0.00	0.00	1.50	1.00	1.00	-1.50	1.50	-1.50	1.50	19.68	-15.53	1740.0	347.3	625.1
23.55	10.99	2.11	0.0	0.70	0.0	0.00	0.00	1.50	1.00	1.00	-1.50	1.50	-1.50	1.50	19.76	-17.08	1738.4	349.0	625.1
23.45	10.99	2.10	0.0	0.70	0.0	0.00	0.00	1.50	1.00	1.00	-1.50	1.50	-1.50	1.50	19.84	-18.64	1736.8	350.6	625.1
23.36	10.99	2.09	0.0	0.70	0.0	0.00	0.00	1.50	1.00	1.00	-1.50	1.50	-1.50	1.50	19.92	-20.19	1735.3	352.2	625.1
23.26	10.99	2.09	0.0	0.70	0.0	0.00	0.00	1.50	1.00	1.00	-1.50	1.50	-1.50	1.50	20.00	-21.74	1733.7	353.9	625.1
23.17	10.99	2.08	0.0	0.70	0.0	0.00	0.00	1.50	1.00	1.00	-1.50	1.50	-1.50	1.50	20.08	-23.29	1732.2	355.5	625.1
23.08	10.99	2.07	0.0	0.70	0.0	0.00	0.00	1.50	1.00	1.00	-1.50	1.50	-1.50	1.50	20.16	-24.85	1730.6	357.1	625.1
22.98	10.99	2.07	0.0	0.70	0.0	0.00	0.00	1.50	1.00	1.00	-1.50	1.50	-1.50	1.50	20.24	-26.40	1729.1	358.8	625.1
22.89	10.99	2.06	0.0	0.70	0.0	0.00	0.00	1.50	1.00	1.00	-1.50	1.50	-1.50	1.50	20.32	-27.95	1727.5	360.4	625.1
22.79	10.99	2.05	0.0	0.70	0.0	0.00	0.00	1.50	1.00	1.00	-1.50	1.50	-1.50	1.50	20.40	-29.51	1726.0	362.0	625.1
22.70	10.99	2.05	0.0	0.70	0.0	0.00	0.00	1.50	1.00	1.00	-1.50	1.50	-1.50	1.50	20.48	-31.06	1724.4	363.7	625.1
22.61	10.99	2.04	0.0	0.70	0.0	0.00	0.00	1.50	1.00	1.00	-1.50	1.50	-1.50	1.50	20.56	-32.61	1722.9	365.3	625.1
22.51	10.99	2.03	0.0	0.70	0.0	0.00	0.00	1.50	1.00	1.00	-1.50	1.50	-1.50	1.50	20.64	-34.16	1721.3	366.9	625.1
22.42	10.99	2.03	0.0	0.70	0.0	0.00	0.00	1.50	1.00	1.00	-1.50	1.50	-1.50	1.50	20.72	-35.72	1719.8	368.6	625.1
22.32	10.99	2.02	0.0	0.70	0.0	0.00	0.00	1.50	1.00	1.00	-1.50	1.50	-1.50	1.50	20.79	-37.27	1718.2	370.2	625.1
22.23	10.99	2.01	0.0	0.70	0.0	0.00	0.00	1.50	1.00	1.00	-1.50	1.50	-1.50	1.50	20.87	-38.82	1716.7	371.8	625.1
22.13	10.99	2.01	0.0	0.70	0.0	0.00	0.00	1.50	1.00	1.00	-1.50	1.50	-1.50	1.50	20.95	-40.38	1715.1	373.5	625.1
22.04	10.99	2.00	0.0	0.70	0.0	0.00	0.00	1.50	1.00	1.00	-1.50	1.50	-1.50	1.50	21.03	-41.93	1713.6	375.1	625.1
21.95	10.99	1.99	34.0	0.70	23.8	0.62	0.35	0.00	1.00	1.00	0.00	0.00	0.62	0.35	21.11	-41.93	1714.2	375.5	626.0
21.85	10.99	1.99	34.0	0.70	23.8	0.61	0.35	0.00	1.00	1.00	0.00	0.00	0.61	0.35	21.19	-41.93	1714.8	376.0	626.9
21.76	10.99	1.98	34.0	0.70	23.8	0.61	0.35	0.00	1.00	1.00	0.00	0.00	0.61	0.35	21.27	-41.93	1715.5	376.4	627.8
21.66	10.99	1.98	34.0	0.70	23.8	0.61	0.35	0.00	1.00	1.00	0.00	0.00	0.61	0.35	21.35	-41.93	1716.1	376.9	628.6
21.57	10.99	1.97	34.0	0.70	23.8	0.61	0.35	0.00	1.00	1.00	0.00	0.00	0.61	0.35	21.43	-41.93	1716.7	377.3	629.5
21.47	10.99	1.97	34.0	0.70	23.8	0.61	0.35	0.00	1.00	1.00	0.00	0.00	0.61	0.35	21.51	-41.93	1717.3	377.7	630.4
21.38	10.99	1.96	34.0	0.70	23.8	0.61	0.35	0.00	1.00	1.00	0.00	0.00	0.61	0.35	21.59	-41.93	1718.0	378.2	631.2
21.29	10.99	1.96	34.0	0.70	23.8	0.60	0.35	0.00	1.00	1.00	0.00	0.00	0.60	0.35	21.67	-41.93	1718.6	378.6	632.1
21.19	10.99	1.95	34.0	0.70	23.8	0.60	0.34	0.00	1.00	1.00	0.00	0.00	0.60	0.34	21.75	-41.93	1719.2	379.0	632.9
21.10	10.99	1.94	34.0	0.70	23.8	0.60	0.34	0.00	1.00	1.00	0.00	0.00	0.60	0.34	21.83	-41.93	1719.8	379.5	633.8
21.00	10.99	1.94	34.0	0.70	23.8	0.60	0.34	0.00	1.00	1.00	0.00	0.00	0.60	0.34	21.91	-41.93	1720.5	379.9	634.7
20.91	10.99	1.93	34.0	0.70	23.8	0.60	0.34	0.00	1.00	1.00	0.00	0.00	0.60	0.34	21.99	-41.93	1721.1	380.3	635.5
20.82	10.99	1.93	34.0	0.70	23.8	0.60	0.34	0.00	1.00	1.00	0.00	0.00	0.60	0.34	22.06	-41.93	1721.7	380.8	636.3
20.72	10.99	1.92	34.0	0.70	23.8	0.59	0.34	0.00	1.00	1.00	0.00	0.00	0.59	0.34	22.14	-41.93	1722.3	381.2	637.2
20.63	10.99	1.92	34.0	0.70	23.8	0.59	0.34	0.00	1.00	1.00	0.00	0.00	0.59	0.34	22.22	-41.93	1722.9	381.6	638.0
20.53	10.99	1.91	34.0	0.70	23.8	0.59	0.34	0.00	1.00	1.00	0.00	0.00	0.59	0.34	22.30	-41.93	1723.5	382.1	638.9
20.44	10.99	1.91	34.0	0.70	23.8	0.59	0.34	0.00	1.00	1.00	0.00	0.00	0.59	0.34	22.38	-41.93	1724.1	382.5	639.7
20.34	10.99	1.90	34.0	0.70	23.8	0.59	0.34	0.00	1.00	1.00	0.00	0.00	0.59	0.34	22.46	-41.93	1724.8	382.9	640.5
20.25	10.99	1.90	34.0	0.70	23.8	0.59	0.33	0.00	1.00	1.00	0.00	0.00	0.59	0.33	22.54	-41.93	1725.4	383.3	641.4
20.16	10.99	1.89	34.0	0.70	23.8	0.58	0.33	0.00	1.00	1.00	0.00	0.00	0.58	0.33	22.62	-41.93	1726.0	383.8	642.2
20.06	10.99	1.88	34.0	0.70	23.8	0.58	0.33	0.00	1.00	1.00	0.00	0.00	0.58	0.33	22.70	-41.93	1726.6	384.2	643.0
19.97	10.99	1.88	34.0	0.70	23.8	0.58	0.33	0.00	1.00	1.00	0.00	0.00	0.58	0.33	22.78	-41.93	1727.2	384.6	643.9
19.87	10.99	1.87	34.0	0.70	23.8	0.58	0.33	0.00	1.00	1.00	0.00	0.00	0.58	0.33	22.86	-41.93	1727.8	385.0	644.7
19.78	10.99	1.87	34.0	0.70	23.8	0.58	0.33	0.00	1.00	1.00	0.00	0.00	0.58	0.33	22.94	-41.93	1728.4	385.5	645.5
19.69	10.99	1.86	34.0	0.70	23.8	0.57	0.33	0.00	1.00	1.00	0.00	0.00	0.57	0.33	23.02	-41.93	1729.0	385.9	646.3
19.59	10.99	1.86	34.0	0.70	23.8	0.57	0.33	0.00	1.00	1.00	0.00	0.00	0.57	0.33	23.10	-41.93	1729.6	386.3	647.1
19.50	10.99	1.85	34.0	0.70	23.8	0.57	0.33	0.00	1.00	1.00	0.00	0.00	0.57	0.33	23.18	-41.93	1730.1	386.7	648.0
19.40	10.99	1.85	34.0	0.70	23.8	0.57	0.33	0.00	1.00	1.00	0.00	0.00	0.57	0.33	23.26	-41.93	1730.7	387.1	648.8
19.31	10.99	1.84	34.0	0.70	23.8	0.57	0.32	0.00	1.00	1.00	0.00	0.00	0.57	0.32	23.33	-41.93	1731.3	387.5	649.6
19.21	10.99	1.83	34.0	0.70	23.8	0.57	0.32	0.00	1.00	1.00	0.00	0.00	0.57	0.32	23.41	-41.93	1731.9	388.0	650.4
19.12	10.99	1.83	34.0	0.70	23.8	0.56	0.32	0.00	1.00	1.00	0.00	0.00	0.56	0.32	23.49	-41.93	1732.5	388.4	651.2
19.03	10.99	1.82	34.0	0.70	23.8	0.56	0.32	0.00	1.00	1.00	0.00	0.00	0.56	0.32	23.57	-41.93	1733.1	388.8	652.0
18.93	10.99	1.82	34.0	0.70	23.8	0.56	0.32	0.00	1.00	1.00	0.00	0.00	0.56	0.32	23.65	-41.93	1733.7	389.2	652.8
18.84	10.99	1.81	34.0	0.70	23.8	0.56	0.32	0.00	1.00	1.00	0.00	0.00	0.56	0.32	23.73	-41.93	1734.2	389.6	653.6
18.74	10.99	1.81	34.0	0.70	23.8	0.56	0.32	0.00	1.00	1.00	0.00	0.00	0.56	0.32	23.81	-41.93	1734.8	390.0	654.4
18.65	10.99	1.80	34.0	0.70	23.8	0.56	0.32	0.00	1.00	1.00	0.00	0.00	0.56	0.32	23.89	-41.93	1735.4	390.4	655.2
18.56	10.99	1.80	34.0	0.70	23.8	0.55	0.32	0.00	1.00	1.00	0.00	0.00	0.55	0.32	23.97	-41.93	1736.0	390.8	656.0
18.46	10.99	1.79	34.0	0.70	23.8	0.55	0.32	0.00	1.00	1.00	0.00	0.00	0.55	0.32	24.05	-41.93	1736.5	391.2	656.7
18.37	10.99	1.78	34.0	0.70	23.8	0.55	0.31	0.00	1.00	1.00	0.00	0.00	0.55	0.31	24.13	-41.93	1737.1	391.6	657.5
18.27	10.99	1.78	34.0	0.70	23.8	0.55	0.31	0.00	1.00	1.00	0.00	0.00	0.55	0.31	24.21	-41.93	1737.7	392.1	658.3
18.18	10.99	1.77	34.0	0.70	23.8	0.55	0.31	0.00	1.00	1.00	0.00	0.00	0.55	0.31	24.29	-41.93	1738.2	392.5	659.1
18.08	10.99	1.77	34.0	0.70	23.8	0.55	0.31	0.00	1.00	1.00	0.00	0.00	0.55	0.31	24.37	-41.93	1738.8	392.9	659.9
17.99	10.99	1.76	34.0	0.70	23.8	0.54	0.31	0.00	1.00	1.00	0.00	0.00	0.54	0.31	24.45	-41.93	1739.4	393.3	660.6
17.90	10.99	1.76	34.0	0.70	23.8	0.54	0.31	0.00	1.00	1.00	0.00	0.00	0.54	0.31	24.52	-41.93	1739.9	393.7	661.4
17.80	10.99	1.75	34.0	0.70	23.8	0.54	0.31	0.00	1.00	1.00	0.00	0.00	0.54	0.31	24.60	-41.93	1740.5	394.1	662.2
17.71	10.99	1.75	34.0	0.70	23.8	0.54	0.31	0.00	1.00	1.00	0.00	0.00	0.54	0.31	24.68	-41.93	1741.0	394.5	662.9
17.61	10.99	1.74	34.0	0.70	23.8	0.54	0.31	0.00	1.00	1.00	0.00	0.00	0.54	0.31	24.76	-41.93	1741.6	394.9	663.7
17.52	10.99	1.73	34.0	0.70	23.8	0.54	0.31	0.00	1.00	1.00	0.00	0.00	0.54	0.31	24.84	-41.93	1742.2	395.2	664.5
17.42	10.99	1.73	34.0	0.70	23.8	0.53	0.31	0.00	1.00	1.00	0.00	0.00	0.53	0.31	24.92	-41.93	1742.7	395.6	665.2
17.33	10.99	1.72	34.0	0.70	23.8	0.53	0.30	0.00	1.00	1.00	0.00	0.00	0.53	0.30	25.00	-41.93	1743.3	396.0	666.0
17.24	10.99	1.72	34.0	0.70	23.8	0.53	0.30	0.00	1.00	1.00	0.00	0.00	0.53	0.30	25.08	-41.93	1743.8	396.4	666.7
17.14	10.99	1.71	34.0	0.70	23.8	0.53	0.30	0.00	1.00	1.00	0.00	0.00	0.53	0.30	25.16	-41.93	1744.4	396.8	667.5
17.05	10.99	1.71	34.0	0.70	23.8	0.53	0.30	0.00	1.00	1.00	0.00	0.00	0.53	0.30	25.24	-41.93	1744.9	397.2	668.2
16.95	10.99	1.70	34.0	0.70	23.8	0.53	0.30	0.00	1.00	1.00	0.00	0.00	0.53	0.30	25.32	-41.93	1745.5	397.6	669.0
16.86	10.99	1.70	34.0	0.70	23.8	0.52	0.30	0.00	1.00	1.00	0.00	0.00	0.52	0.30	25.40	-41.93	1746.0	398.0	669.7
16.77	10.99	1.69	34.0	0.70	23.8	0.52	0.30	0.00	1.00	1.00	0.00	0.00	0.52	0.30	25.48	-41.93	1746.5	398.4	670.5
16.67	10.99	1.69	34.0	0.70	23.8	0.52	0.30	0.00	1.00	1.00	0.00	0.00	0.52	0.30	25.56	-41.93	1747.1	398.8	671.2
16.58	10.99	1.68	34.0	0.70	23.8	0.52	0.30	0.00	1.00	1.00	0.00	0.00	0.52	0.30	25.64	-41.93	1747.6	399.2	672.0
16.48	10.99	1.67	34.0	0.70	23.8	0.52	0.30	0.00	1.00	1.00	0.00	0.00	0.52	0.30	25.72	-41.93	1748.1	399.5	672.7
16.39	10.99	1.67	34.0	0.70	23.8	0.52	0.29	0.00	1.00	1.00	0.00	0.00	0.52	0.29	25.79	-41.93	1748.7	399.9	673.4
16.29	10.99	1.66	34.0	0.70	23.8	0.51	0.29	0.00	1.00	1.00	0.00	0.00	0.51	0.29	25.87	-41.93	1749.2	400.3	674.2
16.20	10.99	1.66	34.0	0.70	23.8	0.51	0.29	0.00	1.00	1.00	0.00	0.00	0.51	0.29	25.95	-41.93	1749.7	400.7	674.9
16.11	10.99	1.65	34.0	0.70	23.8	0.51	0.29	0.00	1.00	1.00	0.00	0.00	0.51	0.29	26.03	-41.93	1750.3	401.1	675.6
16.01	10.99	1.65	34.0	0.70	23.8	0.51	0.29	0.00	1.00	1.00	0.00	0.00	0.51	0.29	26.11	-41.93	1750.8	401.5	676.3
15.92	10.99	1.64	34.0	0.70	23.8	0.51	0.29	0.00	1.00	1.00	0.00	0.00	0.51	0.29	26.19	-41.93	1751.3	401.8	677.1
15.82	10.99	1.64	34.0	0.70	23.8	0.50	0.29	0.00	1.00	1.00	0.00	0.00	0.50	0.29	26.27	-41.93	1751.8	402.2	677.8
15.73	10.99	1.63	34.0	0.70	23.8	0.50	0.29	0.00	1.00	1.00	0.00	0.00	0.50	0.29	26.35	-41.93	1752.4	402.6	678.5
15.64	10.99	1.62	34.0	0.70	23.8	0.50	0.29	0.00	1.00	1.00	0.00	0.00	0.50	0.29	26.43	-41.93	1752.9	403.0	679.2
15.54	10.99	1.62	34.0	0.70	23.8	0.50	0.29	0.00	1.00	1.00	0.00	0.00	0.50	0.29	26.51	-41.93	1753.4	403.3	679.9
15.45	10.99	1.61	34.0	0.70	23.8	0.50	0.28	0.00	1.00	1.00	0.00	0.00	0.50	0.28	26.59	-41.93	1753.9	403.7	680.6
15.35	10.99	1.61	34.0	0.70	23.8	0.50	0.28	0.00	1.00	1.00	0.00	0.00	0.50	0.28	26.67	-41.93	1754.4	404.1	681.3
15.26	10.99	1.60	34.0	0.70	23.8	0.49	0.28	0.00	1.00	1.00	0.00	0.00	0.49	0.28	26.75	-41.93	1754.9	404.5	682.0
15.16	10.99	1.60	34.0	0.70	23.8	0.49	0.28	0.00	1.00	1.00	0.00	0.00	0.49	0.28	26.83	-41.93	1755.4	404.8	682.7

15.07	10.99	1.59	34.0	0.70	23.8	0.49	0.28	0.00	1.00	1.00	0.00	0.00	0.49	0.28	26.91	-41.93	1756.0	405.2	683.4
14.98	10.99	1.59	34.0	0.70	23.8	0.49	0.28	0.00	1.00	1.00	0.00	0.00	0.49	0.28	26.99	-41.93	1756.5	405.6	684.1
14.88	10.99	1.58	34.0	0.70	23.8	0.49	0.28	0.00	1.00	1.00	0.00	0.00	0.49	0.28	27.06	-41.93	1757.0	405.9	684.8
14.79	10.99	1.57	34.0	0.70	23.8	0.49	0.28	0.00	1.00	1.00	0.00	0.00	0.49	0.28	27.14	-41.93	1757.5	406.3	685.5
14.69	10.99	1.57	34.0	0.70	23.8	0.48	0.28	0.00	1.00	1.00	0.00	0.00	0.48	0.28	27.22	-41.93	1758.0	406.7	686.2
14.60	10.99	1.56	34.0	0.70	23.8	0.48	0.28	0.00	1.00	1.00	0.00	0.00	0.48	0.28	27.30	-41.93	1758.5	407.0	686.9
14.51	10.99	1.56	34.0	0.70	23.8	0.48	0.27	0.00	1.00	1.00	0.00	0.00	0.48	0.27	27.38	-41.93	1759.0	407.4	687.6
14.41	10.99	1.55	34.0	0.70	23.8	0.48	0.27	0.00	1.00	1.00	0.00	0.00	0.48	0.27	27.46	-41.93	1759.5	407.8	688.3
14.32	10.99	1.55	34.0	0.70	23.8	0.48	0.27	0.00	1.00	1.00	0.00	0.00	0.48	0.27	27.54	-41.93	1760.0	408.1	688.9
14.22	10.99	1.54	34.0	0.70	23.8	0.48	0.27	0.00	1.00	1.00	0.00	0.00	0.48	0.27	27.62	-41.93	1760.5	408.5	689.6
14.13	10.99	1.54	34.0	0.70	23.8	0.47	0.27	0.00	1.00	1.00	0.00	0.00	0.47	0.27	27.70	-41.93	1760.9	408.8	690.3
14.03	10.99	1.53	34.0	0.70	23.8	0.47	0.27	0.00	1.00	1.00	0.00	0.00	0.47	0.27	27.78	-41.93	1761.4	409.2	691.0
13.94	10.99	1.52	34.0	0.70	23.8	0.47	0.27	0.00	1.00	1.00	0.00	0.00	0.47	0.27	27.86	-41.93	1761.9	409.6	691.6
13.85	10.99	1.52	34.0	0.70	23.8	0.47	0.27	0.00	1.00	1.00	0.00	0.00	0.47	0.27	27.94	-41.93	1762.4	409.9	692.3
13.75	10.99	1.51	34.0	0.70	23.8	0.47	0.27	0.00	1.00	1.00	0.00	0.00	0.47	0.27	28.02	-41.93	1762.9	410.3	693.0
13.66	10.99	1.51	34.0	0.70	23.8	0.47	0.27	0.00	1.00	1.00	0.00	0.00	0.47	0.27	28.10	-41.93	1763.4	410.6	693.6
13.56	10.99	1.50	34.0	0.70	23.8	0.46	0.27	0.00	1.00	1.00	0.00	0.00	0.46	0.27	28.18	-41.93	1763.9	411.0	694.3
13.47	10.99	1.50	34.0	0.70	23.8	0.46	0.26	0.00	1.00	1.00	0.00	0.00	0.46	0.26	28.26	-41.93	1764.3	411.3	694.9
13.37	10.99	1.49	34.0	0.70	23.8	0.46	0.26	0.00	1.00	1.00	0.00	0.00	0.46	0.26	28.33	-41.93	1764.8	411.7	695.6
13.28	10.99	1.49	34.0	0.70	23.8	0.46	0.26	0.00	1.00	1.00	0.00	0.00	0.46	0.26	28.41	-41.93	1765.3	412.0	696.3
13.19	10.99	1.48	34.0	0.70	23.8	0.46	0.26	0.00	1.00	1.00	0.00	0.00	0.46	0.26	28.49	-41.93	1765.8	412.4	696.9
13.09	10.99	1.47	34.0	0.70	23.8	0.46	0.26	0.00	1.00	1.00	0.00	0.00	0.46	0.26	28.57	-41.93	1766.2	412.7	697.6
13.00	10.99	1.46	34.0	0.70	23.8	0.45	0.26	0.00	1.00	1.00	0.00	0.00	0.45	0.26	28.71	-41.93	1766.7	413.1	698.2
12.90	10.99	1.45	34.0	0.70	23.8	0.45	0.26	0.00	1.00	1.00	0.00	0.00	0.45	0.26	28.84	-41.93	1767.2	413.5	698.8
12.81	10.99	1.44	34.0	0.70	23.8	0.44	0.25	0.00	1.00	1.00	0.00	0.00	0.44	0.25	28.98	-41.93	1767.6	413.9	699.5
12.72	10.99	1.43	34.0	0.70	23.8	0.44	0.25	0.00	1.00	1.00	0.00	0.00	0.44	0.25	29.12	-41.93	1768.1	414.3	700.1
12.62	10.99	1.42	34.0	0.70	23.8	0.44	0.25	0.00	1.00	1.00	0.00	0.00	0.44	0.25	29.25	-41.93	1768.5	414.7	700.7
12.53	10.99	1.41	34.0	0.70	23.8	0.43	0.25	0.00	1.00	1.00	0.00	0.00	0.43	0.25	29.39	-41.93	1769.0	415.1	701.3
12.43	10.99	1.40	34.0	0.70	23.8	0.43	0.25	0.00	1.00	1.00	0.00	0.00	0.43	0.25	29.52	-41.93	1769.4	415.5	702.0
12.34	10.99	1.38	34.0	0.70	23.8	0.43	0.24	0.00	1.00	1.00	0.00	0.00	0.43	0.24	29.66	-41.93	1769.9	415.9	702.6
12.24	10.99	1.37	34.0	0.70	23.8	0.42	0.24	0.00	1.00	1.00	0.00	0.00	0.42	0.24	29.80	-41.93	1770.3	416.3	703.2
12.15	10.99	1.36	34.0	0.70	23.8	0.42	0.24	0.00	1.00	1.00	0.00	0.00	0.42	0.24	29.93	-41.93	1770.7	416.7	703.8
12.06	10.99	1.35	34.0	0.70	23.8	0.42	0.24	0.00	1.00	1.00	0.00	0.00	0.42	0.24	30.07	-41.93	1771.2	417.1	704.4
11.96	10.99	1.34	0.0	0.70	0.0	0.00	0.00	0.75	1.00	1.00	-0.75	0.75	-0.75	0.75	30.20	-42.71	1770.4	418.0	704.4
11.87	10.99	1.33	0.0	0.70	0.0	0.00	0.00	0.75	1.00	1.00	-0.75	0.75	-0.75	0.75	30.34	-43.48	1769.6	418.9	704.4
11.77	10.99	1.32	0.0	0.70	0.0	0.00	0.00	0.75	1.00	1.00	-0.75	0.75	-0.75	0.75	30.48	-44.26	1768.8	419.8	704.4
11.68	10.99	1.31	0.0	0.70	0.0	0.00	0.00	0.75	1.00	1.00	-0.75	0.75	-0.75	0.75	30.61	-45.03	1768.1	420.7	704.4
11.59	10.99	1.30	0.0	0.70	0.0	0.00	0.00	0.75	1.00	1.00	-0.75	0.75	-0.75	0.75	30.75	-45.81	1767.3	421.6	704.4
11.49	10.99	1.29	0.0	0.70	0.0	0.00	0.00	0.75	1.00	1.00	-0.75	0.75	-0.75	0.75	30.88	-46.59	1766.5	422.5	704.4
11.40	10.99	1.28	0.0	0.70	0.0	0.00	0.00	0.75	1.00	1.00	-0.75	0.75	-0.75	0.75	31.02	-47.36	1765.7	423.4	704.4
11.30	10.99	1.27	0.0	0.70	0.0	0.00	0.00	0.75	1.00	1.00	-0.75	0.75	-0.75	0.75	31.16	-48.14	1765.0	424.4	704.4
11.21	10.99	1.26	0.0	0.70	0.0	0.00	0.00	0.75	1.00	1.00	-0.75	0.75	-0.75	0.75	31.29	-48.92	1764.2	425.3	704.4
11.11	10.99	1.25	0.0	0.70	0.0	0.00	0.00	0.75	1.00	1.00	-0.75	0.75	-0.75	0.75	31.43	-49.69	1763.4	426.2	704.4
11.02	10.99	1.24	0.0	0.70	0.0	0.00	0.00	0.75	1.00	1.00	-0.75	0.75	-0.75	0.75	31.56	-50.47	1762.6	427.1	704.4
10.93	10.99	1.23	0.0	0.70	0.0	0.00	0.00	0.75	1.00	1.00	-0.75	0.75	-0.75	0.75	31.70	-51.25	1761.9	428.0	704.4
10.83	10.99	1.22	0.0	0.70	0.0	0.00	0.00	0.75	1.00	1.00	-0.75	0.75	-0.75	0.75	31.83	-52.02	1761.1	428.9	704.4
10.74	10.99	1.21	0.0	0.70	0.0	0.00	0.00	0.75	1.00	1.00	-0.75	0.75	-0.75	0.75	31.97	-52.80	1760.3	429.8	704.4
10.64	10.99	1.20	0.0	0.70	0.0	0.00	0.00	0.75	1.00	1.00	-0.75	0.75	-0.75	0.75	32.11	-53.58	1759.5	430.7	704.4
10.55	10.99	1.19	0.0	0.70	0.0	0.00	0.00	0.75	1.00	1.00	-0.75	0.75	-0.75	0.75	32.24	-54.35	1758.8	431.7	704.4
10.45	10.99	1.18	0.0	0.70	0.0	0.00	0.00	0.75	1.00	1.00	-0.75	0.75	-0.75	0.75	32.38	-55.13	1758.0	432.6	704.4
10.36	10.99	1.17	0.0	0.70	0.0	0.00	0.00	0.75	1.00	1.00	-0.75	0.75	-0.75	0.75	32.51	-55.91	1757.2	433.5	704.4
10.27	10.99	1.16	0.0	0.70	0.0	0.00	0.00	0.75	1.00	1.00	-0.75	0.75	-0.75	0.75	32.65	-56.68	1756.4	434.4	704.4
10.17	10.99	1.15	0.0	0.70	0.0	0.00	0.00	0.75	1.00	1.00	-0.75	0.75	-0.75	0.75	32.79	-57.46	1755.6	435.3	704.4
10.08	10.99	1.14	0.0	0.70	0.0	0.00	0.00	0.75	1.00	1.00	-0.75	0.75	-0.75	0.75	32.92	-58.23	1754.9	436.2	704.4
9.98	10.99	1.13	0.0	0.70	0.0	0.00	0.00	0.75	1.00	1.00	-0.75	0.75	-0.75	0.75	33.06	-59.01	1754.1	437.1	704.4
9.89	10.99	1.12	0.0	0.70	0.0	0.00	0.00	0.75	1.00	1.00	-0.75	0.75	-0.75	0.75	33.19	-59.79	1753.3	438.0	704.4
9.80	10.99	1.11	0.0	0.70	0.0	0.00	0.00	0.75	1.00	1.00	-0.75	0.75	-0.75	0.75	33.33	-60.56	1752.5	439.0	704.4
9.70	10.99	1.10	0.0	0.70	0.0	0.00	0.00	0.75	1.00	1.00	-0.75	0.75	-0.75	0.75	33.47	-61.34	1751.8	439.9	704.4
9.61	10.99	1.09	0.0	0.70	0.0	0.00	0.00	0.75	1.00	1.00	-0.75	0.75	-0.75	0.75	33.60	-62.12	1751.0	440.8	704.4
9.51	10.99	1.08	0.0	0.70	0.0	0.00	0.00	0.75	1.00	1.00	-0.75	0.75	-0.75	0.75	33.74	-62.89	1750.2	441.7	704.4
9.42	10.99	1.07	0.0	0.70	0.0	0.00	0.00	0.75	1.00	1.00	-0.75	0.75	-0.75	0.75	33.87	-63.67	1749.4	442.6	704.4
9.32	10.99	1.06	0.0	0.70	0.0	0.00	0.00	0.75	1.00	1.00	-0.75	0.75	-0.75	0.75	34.01	-64.45	1748.7	443.5	704.4
9.23	10.99	1.05	0.0	0.70	0.0	0.00	0.00	0.75	1.00	1.00	-0.75	0.75	-0.75	0.75	34.15	-65.22	1747.9	444.4	704.4
9.14	10.99	1.04	0.0	0.70	0.0	0.00	0.00	0.75	1.00	1.00	-0.75	0.75	-0.75	0.75	34.28	-66.00	1747.1	445.3	704.4
9.04	10.99	1.03	0.0	0.70	0.0	0.00	0.00	0.75	1.00	1.00	-0.75	0.75	-0.75	0.75	34.42	-66.78	1746.3	446.3	704.4
8.95	10.99	1.01	0.0	0.70	0.0	0.00	0.00	0.75	1.00	1.00	-0.75	0.75	-0.75	0.75	34.55	-67.55	1745.6	447.2	704.4
8.85	10.99	1.00	0.0	0.70	0.0	0.00	0.00	0.75	1.00	1.00	-0.75	0.75	-0.75	0.75	34.69	-68.33	1744.8	448.1	704.4
8.76	10.99	0.99	0.0	0.70	0.0	0.00	0.00	0.75	1.00	1.00	-0.75	0.75	-0.75	0.75	34.82	-69.11	1744.0	449.0	704.4
8.67	10.99	0.98	0.0	0.70	0.0	0.00	0.00	0.75	1.00	1.00	-0.75	0.75	-0.75	0.75	34.96	-69.88	1743.2	449.9	704.4
8.57	10.99	0.97	0.0	0.70	0.0	0.00	0.00	0.75	1.00	1.00	-0.75	0.75	-0.75	0.75	35.10	-70.66	1742.4	450.8	704.4
8.48	10.99	0.96	0.0	0.70	0.0	0.00	0.00	0.75	1.00	1.00	-0.75	0.75	-0.75	0.75	35.23	-71.43	1741.7	451.7	704.4
8.38	10.99	0.95	0.0	0.70	0.0	0.00	0.00	0.75	1.00	1.00	-0.75	0.75	-0.75	0.75	35.37	-72.21	1740.9	452.6	704.4
8.29	10.99	0.94	0.0	0.70	0.0	0.00	0.00	0.75	1.00	1.00	-0.75	0.75	-0.75	0.75	35.50	-72.99	1740.1	453.5	704.4
8.19	10.99	0.93	0.0	0.70	0.0	0.00	0.00	0.75	1.00	1.00	-0.75	0.75	-0.75	0.75	35.64	-73.76	1739.3	454.5	704.4
8.10	10.99	0.92	0.0	0.70	0.0	0.00	0.00	0.75	1.00	1.00	-0.75	0.75	-0.75	0.75	35.78	-74.54	1738.6	455.4	704.4
8.01	10.99	0.91	0.0	0.70	0.0	0.00	0.00	0.75	1.00	1.00	-0.75	0.75	-0.75	0.75	35.91	-75.32	1737.8	456.3	704.4
7.91	10.99	0.90	0.0	0.70	0.0	0.00	0.00	0.75	1.00	1.00	-0.75	0.75	-0.75	0.75	36.05	-76.09	1737.0	457.2	704.4
7.82	10.99	0.89	0.0	0.70	0.0	0.00	0.00	0.75	1.00	1.00	-0.75	0.75	-0.75	0.75	36.18	-76.87	1736.2	458.1	704.4
7.72	10.99	0.88	0.0	0.70	0.0	0.00	0.00	0.75	1.00	1.00	-0.75	0.75	-0.75	0.75	36.32	-77.65	1735.5	459.0	704.4
7.63	10.99	0.87	0.0	0.70	0.0	0.00	0.00	0.75	1.00	1.00	-0.75	0.75	-0.75	0.75	36.46	-78.42	1734.7	459.9	704.4
7.54	10.99	0.86	0.0	0.70	0.0	0.00	0.00	0.75	1.00	1.00	-0.75	0.75	-0.75	0.75	36.59	-79.20	1733.9	460.8	704.4
7.44	10.99	0.85	0.0	0.70	0.0	0.00	0.00	0.75	1.00	1.00	-0.75	0.75	-0.75	0.75	36.73	-79.98	1733.1	461.8	704.4
7.35	10.99	0.84	0.0	0.70	0.0	0.00	0.00	0.75	1.00	1.00	-0.75	0.75	-0.75	0.75	36.86	-80.75	1732.4	462.7	704.4
7.25	10.99	0.83	0.0	0.70	0.0	0.00	0.00	0.75	1.00	1.00	-0.75	0.75	-0.75	0.75	37.00	-81.53	1731.6	463.6	704.4
7.16	10.99	0.82	0.0	0.70	0.0	0.00	0.00	0.75	1.00	1.00	-0.75	0.75	-0.75	0.75	37.14	-82.31	1730.8	464.5	704.4
7.06	10.99	0.81	0.0	0.70	0.0	0.00	0.00	0.75	1.00	1.00	-0.75	0.75	-0.75	0.75	37.27	-83.08	1730.0	465.4	704.4
6.97	10.99	0.80	0.0	0.70	0.0	0.00	0.00	0.75	1.00	1.00	-0.75	0.75	-0.75	0.75	37.41	-83.86	1729.2	466.3	704.4
6.88	10.99	0.79	0.0	0.70	0.0	0.00	0.00	0.75	1.00	1.00	-0.75	0.75	-0.75	0.75	37.54	-84.63	1728.5	467.2	704.4
6.78	10.99	0.78	0.0	0.70	0.0	0.00	0.00	0.75	1.00	1.00	-0.75	0.75	-0.75	0.75	37.68	-85.41	1727.7	468.1	704.4
6.69	10.99	0.77	0.0	0.70	0.0	0.00	0.00	0.75	1.00	1.00	-0.75	0.75	-0.75	0.75	37.81	-86.19	1726.9	469.1	704.4
6.59	10.99	0.76	0.0	0.70	0.0	0.00	0.00	0.75	1.00	1.00	-0.75	0.75	-0.75	0.75	37.95	-86.96	1726.1	470.0	704.4
6.50	10.99	0.75	0.0	0.70	0.0	0.00	0.00	0.75	1.00	1.00	-0.75	0.75	-0.75	0.75	38.09	-87.74	1725.4	470.9	704.4
6.40	10.99	0.74	0.0	0.70	0.0	0.00	0.00	0.75	1.00	1.00	-0.75	0.75	-0.75	0.75	38.22	-88.52	1724.6	471.8	704.4
6.31	10.99	0.73	0.0	0.70	0.0	0.00	0.00	0.75	1.00	1.00	-0.75	0.75	-0.75	0.75	38.36	-89.29	1723.8	472.7	704.4
6.22	10.99	0.72	0.0	0.70	0.0	0.00	0.00	0.75	1.00	1.00	-0.75	0.75	-0.75	0.75	38.49	-90.07	1723.0	473.6	704.4
6.12	10.99	0.71	0.0	0.70	0.0	0.00	0.00	0.75	1.00	1.00	-0.75	0.75	-0.75	0.75	38.63	-90.85	1722.3	474.5	704.4
6.03	10.99	0.70	0.0	0.70	0.0	0.00	0.00	0.75	1.00	1.00	-0.75	0.75	-0.75	0.75	38.77	-91.62	1721.5	475.4	704.4
5.93	10.99	0.69	0.0	0.70	0.0	0.00	0.00	0.75	1.00	1.00	-0.75	0.75	-0.75	0.75	38.90	-92.40	1720.7	476.4	704.4
5.84	10.99	0.68	0.0	0.70	0.0	0.00	0.00	0.75	1.00	1.00	-0.75	0.75	-0.75	0.75	39.04	-93.18	1719.9	477.3	704.4
5.75	10.99	0.67	0.0	0.70	0.0	0.00	0.00	0.75	1.00	1.00	-0.75	0.75	-0.75	0.75	39.17	-93.95	1719.2	478.2	704.4
5.65	10.99	0.66	0.0	0.70	0.0	0.00	0.00	0.75	1.00	1.00	-0.75	0.75	-0.75	0.75	39.31	-94.73	1718.4	479.1	704.4
5.56	10.99	0.65	0.0	0.70	0.0	0.00	0.00	0.75	1.00	1.00	-0.75	0.75	-0.75	0.75	39.45	-95.51	1717.6	480.0	704.4
5.46	10.99	0.64	0.0	0.70	0.0	0.00	0.00	0.75	1.00	1.00	-0.75	0.75	-0.75	0.75	39.58	-96.28	1716.8	480.9	704.4
5.37	10.99	0.63	0.0	0.70	0.0	0.00	0.00	0.75	1.00	1.00	-0.75	0.75	-0.75	0.75	39.72	-97.06	1716.0	481.8	704.4
5.27	10.99	0.62	0.0	0.70	0.0	0.00	0.00	0.75	1.00	1.00	-0.75	0.75	-0.75	0.75	39.85	-97.83	1715.3	482.7	704.4
5.18	10.99	0.61	0.0	0.70	0.0	0.00	0.00	0.75	1.00	1.00	-0.75	0.75	-0.75	0.75	39.99	-98.61	1714.5	483.7	704.4
5.09	10.99	0.60	0.0	0.70	0.0	0.00	0.00	0.75	1.00	1.00	-0.75	0.75	-0.75	0.75	40.13	-99.39	1713.7	484.6	704.4
4.99	10.99	0.59	0.0	0.70	0.0	0.00	0.00	0.75	1.00	1.00	-0.75	0.75	-0.75	0.75	40.26	-100.16	1712.9	485.5	704.4
4.90	10.99	0.58	0.0	0.70	0.0	0.00	0.00	0.75	1.00	1.00	-0.75	0.75	-0.75	0.75	40.40	-100.94	1712.2	486.4	704.4
4.80	10.99	0.57	0.0	0.70	0.0	0.00	0.00	0.75	1.00	1.00	-0.75	0.75	-0.75	0.75	40.53	-101.72	1711.4	487.3	704.4
4.71	10.99	0.56	0.0	0.70	0.0	0.00	0.00	0.75	1.00	1.00	-0.75	0.75	-0.75	0.75	40.67	-102.49	1710.6	488.2	704.4
4.62	10.99	0.55	0.0	0.70	0.0	0.00	0.00	0.75	1.00	1.00	-0.75	0.75	-0.75	0.75	40.80	-103.27	1709.8	489.1	704.4
4.52	10.99	0.54	0.0	0.70	0.0	0.00	0.00	0.75	1.00	1.00	-0.75	0.75	-0.75	0.75	40.94	-104.05	1709.1	490.0	704.4
4.43	10.99	0.53	0.0	0.70	0.0	0.00	0.00	0.75	1.00	1.00	0.00	0.00	0.00	0.00	41.08	-104.05	1709.1	490.2	704.4
4.33	10.99	0.52	0.0	0.70	0.0	0.00	0.00	0.75	1.00	1.00	0.00	0.00	0.00	0.00	41.21	-104.05	1709.1	490.3	704.4
4.24	10.99	0.51	0.0	0.70	0.0	0.00	0.00	0.75	1.00	1.00	0.00	0.00	0.00	0.00	41.35	-104.05	1709.1	490.5	704.4
4.14	10.99	0.50	0.0	0.70	0.0	0.00	0.00	0.75	1.00	1.00	0.00	0.00	0.00	0.00	41.48	-104.05	1709.1	490.6	704.4

4.05	10.99	0.49	0.0	0.70	0.0	0.00	0.00	0.75	1.00	1.00	0.00	0.00	0.00	0.00	41.62	-104.05	1709.1	490.7	704.4
3.96	10.99	0.48	0.0	0.70	0.0	0.00	0.00	0.75	1.00	1.00	0.00	0.00	0.00	0.00	41.76	-104.05	1709.1	490.9	704.4
3.86	10.99	0.47	0.0	0.70	0.0	0.00	0.00	0.75	1.00	1.00	0.00	0.00	0.00	0.00	41.89	-104.05	1709.1	491.0	704.4
3.77	10.99	0.46	0.0	0.70	0.0	0.00	0.00	0.75	1.00	1.00	0.00	0.00	0.00	0.00	42.03	-104.05	1709.1	491.1	704.4
3.67	10.99	0.45	0.0	0.70	0.0	0.00	0.00	0.75	1.00	1.00	0.00	0.00	0.00	0.00	42.16	-104.05	1709.1	491.3	704.4
3.58	10.99	0.44	0.0	0.70	0.0	0.00	0.00	0.75	1.00	1.00	0.00	0.00	0.00	0.00	42.30	-104.05	1709.1	491.4	704.4
3.48	10.99	0.42	0.0	0.70	0.0	0.00	0.00	0.50	1.00	1.00	0.00	0.00	0.00	0.00	42.44	-104.05	1709.1	491.5	704.4
3.39	10.99	0.41	0.0	0.70	0.0	0.00	0.00	0.50	1.00	1.00	0.00	0.00	0.00	0.00	42.57	-104.05	1709.1	491.7	704.4
3.30	10.99	0.40	0.0	0.70	0.0	0.00	0.00	0.50	1.00	1.00	0.00	0.00	0.00	0.00	42.71	-104.05	1709.1	491.8	704.4
3.20	10.99	0.39	0.0	0.70	0.0	0.00	0.00	0.50	1.00	1.00	0.00	0.00	0.00	0.00	42.84	-104.05	1709.1	491.9	704.4
3.11	10.99	0.38	0.0	0.70	0.0	0.00	0.00	0.50	1.00	1.00	0.00	0.00	0.00	0.00	42.98	-104.05	1709.1	492.1	704.4
3.01	10.99	0.37	0.0	0.70	0.0	0.00	0.00	0.50	1.00	1.00	0.00	0.00	0.00	0.00	43.12	-104.05	1709.1	492.2	704.4
2.92	10.99	0.36	0.0	0.70	0.0	0.00	0.00	0.50	1.00	1.00	0.00	0.00	0.00	0.00	43.25	-104.05	1709.1	492.4	704.4
2.83	10.99	0.34	0.0	0.70	0.0	0.00	0.00	0.50	1.00	1.00	0.00	0.00	0.00	0.00	43.39	-104.05	1709.1	492.5	704.4
2.73	10.99	0.33	0.0	0.70	0.0	0.00	0.00	0.50	1.00	1.00	0.00	0.00	0.00	0.00	43.52	-104.05	1709.1	492.6	704.4
2.64	10.99	0.32	0.0	0.70	0.0	0.00	0.00	0.50	1.00	1.00	0.00	0.00	0.00	0.00	43.66	-104.05	1709.1	492.8	704.4
2.54	10.99	0.31	0.0	0.70	0.0	0.00	0.00	0.50	1.00	1.00	0.00	0.00	0.00	0.00	43.80	-104.05	1709.1	492.9	704.4
2.45	10.99	0.30	0.0	0.70	0.0	0.00	0.00	0.50	1.00	1.00	0.00	0.00	0.00	0.00	43.93	-104.05	1709.1	493.0	704.4
2.35	10.99	0.29	0.0	0.70	0.0	0.00	0.00	0.50	1.00	1.00	0.00	0.00	0.00	0.00	44.07	-104.05	1709.1	493.2	704.4
2.26	10.99	0.28	0.0	0.70	0.0	0.00	0.00	0.50	1.00	1.00	0.00	0.00	0.00	0.00	44.20	-104.05	1709.1	493.3	704.4
2.17	10.99	0.27	0.0	0.70	0.0	0.00	0.00	0.50	1.00	1.00	0.00	0.00	0.00	0.00	44.34	-104.05	1709.1	493.4	704.4
2.07	10.99	0.25	0.0	0.70	0.0	0.00	0.00	0.50	1.00	1.00	0.00	0.00	0.00	0.00	44.47	-104.05	1709.1	493.6	704.4
1.98	10.99	0.24	0.0	0.70	0.0	0.00	0.00	0.50	1.00	1.00	0.00	0.00	0.00	0.00	44.61	-104.05	1709.1	493.7	704.4
1.88	10.99	0.23	0.0	0.70	0.0	0.00	0.00	0.50	1.00	1.00	0.00	0.00	0.00	0.00	44.75	-104.05	1709.1	493.9	704.4
1.79	10.99	0.22	0.0	0.70	0.0	0.00	0.00	0.50	1.00	1.00	0.00	0.00	0.00	0.00	44.88	-104.05	1709.1	494.0	704.4
1.70	10.99	0.21	0.0	0.70	0.0	0.00	0.00	0.50	1.00	1.00	0.00	0.00	0.00	0.00	45.02	-104.05	1709.1	494.1	704.4
1.60	10.99	0.20	0.0	0.70	0.0	0.00	0.00	0.50	1.00	1.00	0.00	0.00	0.00	0.00	45.15	-104.05	1709.1	494.3	704.4
1.51	10.99	0.19	0.0	0.70	0.0	0.00	0.00	0.50	1.00	1.00	0.00	0.00	0.00	0.00	45.29	-104.05	1709.1	494.4	704.4
1.41	10.99	0.18	0.0	0.70	0.0	0.00	0.00	0.50	1.00	1.00	0.00	0.00	0.00	0.00	45.43	-104.05	1709.1	494.5	704.4
1.32	10.99	0.16	0.0	0.70	0.0	0.00	0.00	0.50	1.00	1.00	0.00	0.00	0.00	0.00	45.56	-104.05	1709.1	494.7	704.4
1.22	10.99	0.15	0.0	0.70	0.0	0.00	0.00	0.50	1.00	1.00	0.00	0.00	0.00	0.00	45.70	-104.05	1709.1	494.8	704.4
1.13	10.99	0.14	0.0	0.70	0.0	0.00	0.00	0.50	1.00	1.00	0.00	0.00	0.00	0.00	45.83	-104.05	1709.1	494.9	704.4
1.04	10.99	0.13	0.0	0.70	0.0	0.00	0.00	0.50	1.00	1.00	0.00	0.00	0.00	0.00	45.97	-104.05	1709.1	495.1	704.4
0.94	10.99	0.12	0.0	0.70	0.0	0.00	0.00	0.50	1.00	1.00	0.00	0.00	0.00	0.00	46.11	-104.05	1709.1	495.2	704.4
0.85	10.99	0.11	0.0	0.70	0.0	0.00	0.00	0.50	1.00	1.00	0.00	0.00	0.00	0.00	46.24	-104.05	1709.1	495.3	704.4
0.75	10.99	0.10	0.0	0.70	0.0	0.00	0.00	0.50	1.00	1.00	0.00	0.00	0.00	0.00	46.38	-104.05	1709.1	495.5	704.4
0.66	10.99	0.08	0.0	0.70	0.0	0.00	0.00	0.50	1.00	1.00	0.00	0.00	0.00	0.00	46.51	-104.05	1709.1	495.6	704.4
0.57	10.99	0.07	0.0	0.70	0.0	0.00	0.00	0.50	1.00	1.00	0.00	0.00	0.00	0.00	46.65	-104.05	1709.1	495.8	704.4
0.47	10.99	0.06	0.0	0.70	0.0	0.00	0.00	0.50	1.00	1.00	0.00	0.00	0.00	0.00	46.79	-104.05	1709.1	495.9	704.4
0.38	10.99	0.05	0.0	0.70	0.0	0.00	0.00	0.50	1.00	1.00	0.00	0.00	0.00	0.00	46.92	-104.05	1709.1	496.0	704.4
0.28	10.99	0.04	0.0	0.70	0.0	0.00	0.00	0.50	1.00	1.00	0.00	0.00	0.00	0.00	47.06	-104.05	1709.1	496.2	704.4
0.19	10.99	0.03	0.0	0.70	0.0	0.00	0.00	0.50	1.00	1.00	0.00	0.00	0.00	0.00	47.19	-104.05	1709.1	496.3	704.4
0.09	10.99	0.02	0.0	0.70	0.0	0.00	0.00	0.50	1.00	1.00	0.00	0.00	0.00	0.00	47.33	-104.05	1709.1	496.4	704.4
0.00	10.99	0.01	0.0	0.70	0.0	0.00	0.00	0.50	1.00	1.00	0.00	0.00	0.00	0.00	47.46	-104.05	1709.1	496.6	704.4

SETTLEMENT based on Ultimate Loading by Vesic Method (1977):
Ztip=47.00 Btip= 3.50 Cp= 0.135 Cs= 0.205
Xpp=4.453-in Xps= 0.132-in Xtip= 4.585-in
Cp & Cs are average value at bearing stratum from pile tip extend to 4 Btip

At loading: Qtip=1352.9-kp Qtop= 1709.1-kp Qside= 356.2-kp
Xtip=4.585-in Xtop= 4.809-in Xshaft= 0.223-in

LOAD - TOTAL SETTLEMENT RELATION (from t-z, and q-w curves):
Based on Vesic Method (1977)

Xtop -in	Xshaft -in	Xtip -in	Qtip -kp	Qside -kp	Qtotal -kp
0.0003	0.0003	0.0000	1.8	0.8	2.6
0.0326	0.0070	0.0256	21.3	60.6	81.9
0.0643	0.0131	0.0512	40.8	111.9	152.7
0.0955	0.0187	0.0767	60.3	155.7	216.0
0.1262	0.0239	0.1023	79.8	192.8	272.6
0.1566	0.0287	0.1279	99.3	224.1	323.4
0.1866	0.0331	0.1535	118.8	250.3	369.1
0.2163	0.0372	0.1791	138.3	272.0	410.3
0.2457	0.0411	0.2046	157.6	290.0	447.6
0.2749	0.0447	0.2302	176.9	304.7	481.6
0.3039	0.0481	0.2558	196.1	316.6	512.8
0.3327	0.0513	0.2814	215.3	326.2	541.5
0.3614	0.0544	0.3069	234.3	333.8	568.1
0.3899	0.0574	0.3325	253.1	339.8	593.0
0.4184	0.0603	0.3581	271.9	344.5	616.4
0.4467	0.0630	0.3837	290.5	348.0	638.5
0.4750	0.0657	0.4093	309.0	350.7	659.6
0.5032	0.0683	0.4348	327.3	352.6	679.9
0.5313	0.0709	0.4604	345.4	354.0	699.4
0.5594	0.0734	0.4860	363.4	355.0	718.4
0.5874	0.0759	0.5116	381.2	355.6	736.8
0.6154	0.0783	0.5372	398.8	356.0	754.7
0.6434	0.0806	0.5627	416.2	356.1	772.3
0.6713	0.0830	0.5883	433.4	356.2	789.5
0.6992	0.0853	0.6139	450.4	356.0	806.4
0.7270	0.0875	0.6395	467.2	355.8	823.0
0.7548	0.0898	0.6650	483.8	355.5	839.3
0.7826	0.0920	0.6906	500.1	355.1	855.2
0.8103	0.0941	0.7162	516.3	354.6	870.9
0.8380	0.0962	0.7418	532.2	354.0	886.2
0.8657	0.0983	0.7674	547.9	353.3	901.2
0.8933	0.1004	0.7929	563.4	352.5	915.9
0.9209	0.1024	0.8185	578.7	351.7	930.4
0.9485	0.1044	0.8441	593.7	350.8	944.5
0.9760	0.1063	0.8697	608.5	349.9	958.4
1.0035	0.1082	0.8953	623.1	349.1	972.1
1.0310	0.1101	0.9208	637.4	348.3	985.7
1.0584	0.1120	0.9464	651.5	347.6	999.1
1.0859	0.1139	0.9720	665.4	347.8	1013.2
1.1133	0.1157	0.9976	679.0	347.4	1026.4
1.1407	0.1175	1.0232	692.4	347.0	1039.4
1.1680	0.1193	1.0487	705.6	346.5	1052.1
1.1953	0.1210	1.0743	718.6	346.0	1064.6
1.2226	0.1227	1.0999	731.3	345.3	1076.7
1.2498	0.1243	1.1255	743.8	344.6	1088.5
1.2770	0.1259	1.1510	756.1	343.9	1100.0
1.3041	0.1275	1.1766	768.2	343.1	1111.3
1.3313	0.1291	1.2022	780.0	342.2	1122.2
1.3584	0.1306	1.2278	791.7	341.2	1132.9
1.3854	0.1321	1.2534	803.1	340.2	1143.3
1.4125	0.1335	1.2789	814.3	339.1	1153.4
1.4395	0.1349	1.3045	825.3	338.0	1163.4
1.4664	0.1363	1.3301	836.1	336.9	1173.0
1.4934	0.1377	1.3557	846.7	335.8	1182.5
1.5203	0.1390	1.3813	857.1	334.7	1191.8
1.5472	0.1403	1.4068	867.3	333.6	1200.9
1.5740	0.1416	1.4324	877.3	332.5	1209.8
1.6009	0.1429	1.4580	887.1	331.4	1218.6
1.6277	0.1441	1.4836	896.8	330.4	1227.2

1.6545	0.1453	1.5091	906.2	329.5	1235.7
1.6813	0.1465	1.5347	915.5	328.6	1244.1
1.7080	0.1477	1.5603	924.6	327.8	1252.4
1.7348	0.1489	1.5859	933.5	327.1	1260.6
1.7615	0.1500	1.6115	942.3	326.4	1268.7
1.7882	0.1511	1.6370	950.9	325.8	1276.7
1.8149	0.1523	1.6626	959.4	325.3	1284.6
1.8415	0.1533	1.6882	967.6	324.8	1292.4
1.8682	0.1544	1.7138	975.8	324.3	1300.1
1.8948	0.1555	1.7394	983.8	323.8	1307.6
1.9214	0.1565	1.7649	991.6	323.3	1314.9
1.9480	0.1575	1.7905	999.3	322.7	1322.0
1.9746	0.1585	1.8161	1006.9	321.9	1328.8
2.0011	0.1594	1.8417	1014.3	320.9	1335.3
2.0276	0.1603	1.8673	1021.6	319.7	1341.3
2.0540	0.1612	1.8928	1028.8	318.0	1346.8
2.0804	0.1620	1.9184	1035.9	315.8	1351.7
2.1070	0.1630	1.9440	1042.8	317.3	1360.1
2.1335	0.1639	1.9696	1049.7	317.0	1366.6
2.1600	0.1648	1.9951	1056.4	316.6	1373.0
2.1864	0.1657	2.0207	1063.0	316.3	1379.3
2.2129	0.1666	2.0463	1069.5	316.0	1385.5
2.2393	0.1674	2.0719	1075.9	315.6	1391.5
2.2657	0.1683	2.0975	1082.2	315.3	1397.5
2.2921	0.1691	2.1230	1088.4	315.0	1403.4
2.3185	0.1699	2.1486	1094.6	314.6	1409.2
2.3449	0.1707	2.1742	1100.6	314.3	1414.9
2.3712	0.1715	2.1998	1106.6	314.0	1420.5
2.3976	0.1722	2.2254	1112.4	313.6	1426.1
2.4239	0.1730	2.2509	1118.2	313.3	1431.5
2.4503	0.1738	2.2765	1123.9	313.0	1436.9
2.4766	0.1745	2.3021	1129.6	312.6	1442.2
2.5029	0.1752	2.3277	1135.1	312.3	1447.4
2.5292	0.1760	2.3533	1140.6	312.0	1452.6
2.5555	0.1767	2.3788	1146.0	311.6	1457.7
2.5818	0.1774	2.4044	1151.4	311.3	1462.7
3.0745	0.1892	2.8853	1241.6	305.0	1546.6
3.5645	0.1983	3.3662	1312.1	298.7	1610.8
4.0505	0.2034	3.8471	1352.9	292.4	1645.4
4.5302	0.2022	4.3279	1347.3	286.2	1633.4
5.0024	0.1936	4.8088	1286.5	279.9	1566.4

At Qwork= 603.00-kp Settlement= 0.40213-in
At Qwork= 603.00-kp Secant Stiffness Kqx= 1499.51-kp/-in
At Xallow= 1.00-in Q= 970.40-kp
Note: If the program cannot find a result or the result exceeds the upper limit, The result will be displayed as 99999.

SUMMARY:

Total Ultimate Capacity (Down)= 1709.057-kp Total Ultimate Capacity (Up)= 496.569-kp
Total Allowable Capacity (Down)= 629.045-kp Total Allowable Capacity (Up)= 272.017-kp

Weight above Ground= 0.00 Total Pile Weight= 47.46-kp *Soil Weight is not included
Side Resistance (Down)= 356.155-kp Side Resistance (Up)= 449.105-kp
Tip Resistance (Down)= 1352.902-kp Tip Resistance (Up)= 0.000-kp
Negative Friction, Qneg= -104.046-kp, which has been subtracted from Total Ultimate Capacity (Down)
Negative friction does not affect Total Uplift Ultimate Capacity (Up)

OK! Qallow > Q * Vertical Load, Q= 603.0 -kp

FACTOR OF SAFETY:

FSside	FStip	FSup	FSweight
2.0	3.0	2.0	1.0

* FStorsion = FSside

Notes:
* Settlement in the program is Elastic Settlement only. Consolidation Settlement is not calculated!
Length - Pile length, distance from pile top to tip (not from ground surface)
Width or D - Width of pile shaft (pile diameter)
Ds and Dl - Short Side and Long Side of Footing
Area - Section area of pile shaft or tip area of pile
Sv - Vertical stress in soils (It may be limited based on critical depth, Z_lim or Z/D
qult - Ultimate tip resistance (pressure)
Qtip_dw - Ultimate downward tip resistance (Force or Capacity)
Qtip_up - Ultimate uplift tip resistance for belled pile or uplift plate (Force or Capacity)
Torsion - Ultimate torsion resistance for single pile (Capacity)
dz - Small Segment of Depth for Calculation
Zs - Soil Depth, Depth from ground surface
Zp - Pile Depth, Depth from pile top
Prem - Primer of pile shaft
Phi - Soil internal friction angle (between soils)
Kf - Friction factor to convert Phi to Delta
Delta - Ski friction between soil and pile (function of Phi. It is different from Phi)
f_dw - Downward Resistance between soil and pile from Delta
f_up - Uplift Resistance between soil and pile from Delta
C - Soil cohesion (between soils)
Ca - Adhesion between soil and pile (function of C. It is different from C) Ca=KaKcC
Ka - Adhesion ratio, C/Ca
Kc - Adhesion factor defended by users
Ca_dw - Downward adhesion between pile and soil
Ca_up - Uplift adhesion between pile and soil
Sf_dw - Downward side resistance (sum of friction and adhesion, f_dw + Ca_dw)
Sf_up - Uplift side resistance (sum of friction and adhesion, f_up + Ca_up)
Torsion side resistance = (Sf_dw+Sf_up)/2 * pile diameter/2
Weight - Weight of Pile shaft
Qneg - negative friction Resistance
Qside - Ultimate side resistance (Qside_dw or Qside_up)
Qtip - Ultimate tip resistance (Qtip_dw or Qtip_up for uplift plate)
Q_dw - Ultimate downward capacity (Qtip + Qside_dw)
Q_up - Ultimate uplift capacity (Weight + Qside_up)
E - Elastic modules
Xs - Settlement due to axial deformation of pile shaft
Xpp - Settlement due to point load from pile tip
Xps- Settlement due to load from pile shaft
Xtop - Total settlement, Xs + Xpp + Xps
Xtip - Tip settlement, Xpp + Xps
Xshaft - Shaft deformation, Xs
Xallow - Allowable settlement specified by users
Qwork - Vertical working load applied to pile
Qallow - Vertical allowable load, Qult/F.S.

VERTICAL ANALYSIS

Figure 1

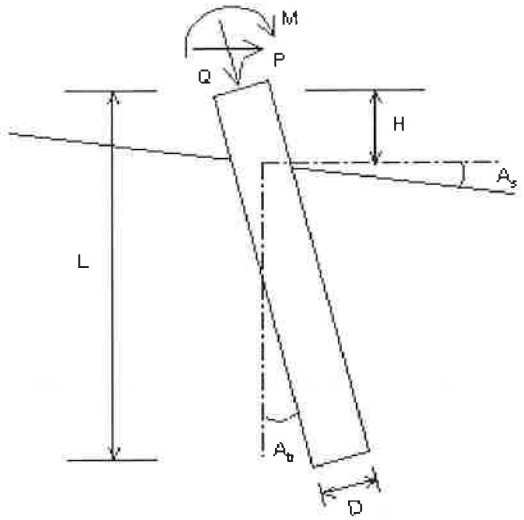

Drilled Shaft (dia >24 in. or 61 cm)

Loads:
Load Factor for Vertical Loads= 1.0
Load Factor for Lateral Loads= 1.0
Loads Supported by Pile Cap= 0 %
Shear Condition: Static

(with Load Factor)
Vertical Load, Q= 366.0 -kp

Profile:
Pile Length, L= 45.0 -ft
Top Height, H= 0 -ft
Slope Angle, As= 0
Batter Angle, Ab= 0

* Zero Friction *
Zero Friction Start: 0 -ft End: 4.5 -ft
* Negative Friction *
Negative Friction Start: 4.5 -ft End: 19.5 -ft with Factor: 1

Soil Data:

Depth -ft	Gamma -lb/f3	Phi	C -kp/f2	K -lb/i3	e50 or Dr %	Nspt
0	90.0	0.0	0.500	313.1	0.87	10
4.5	117.0	0.0	0.50	103.7	1.30	5
10	117.0	0.0	0.500	136.8	1.19	6
12	52.6	32.0	0.00	32.9	35.04	10
19.5	56.8	32.0	0.00	50.8	45.73	15
22	70.4	32.0	0.500	867.8	0.56	21
27	60.4	35.0	0.00	90.0	63.67	28
32	70.2	0.0	1.500	814.1	0.57	20
40	60.7	37.0	0.00	97.3	66.49	31
42.5	66.4	37.0	0.00	148.9	83.39	48

Pile Data:

Depth -ft	Width -in	Area -in2	Per. -in	I -in4	E -kp/i2	Weight -kp/f
0.0	36	1017.9	113.1	82448.0	3000	1.060
45.0						

Vertical Capacity:
Weight above Ground= 0.00 Total Weight= 32.27-kp *Soil Weight is not included
Side Resistance (Down)= 195.933-kp Side Resistance (Up)= 261.560-kp
Tip Resistance (Down)= 881.546-kp Tip Resistance (Up)= 0.000-kp
Total Ultimate Capacity (Down) Qult= 1077.479-kp Total Ultimate Capacity (Up)= 293.827-kp
Total Allowable Capacity (Down) Qallow= 391.815-kp Total Allowable Capacity (Up) Qallow= 163.046-kp
OK! Qallow > Q

Settlement Calculation:
At Q= 366.00-kp Settlement= 0.35184-in
At Xallow= 1.00-in Q= 653.80444-kp

Note: If the program cannot find a result or the result exceeds the upper limit. The result will be displayed as 99999.

ALLOWABLE CAPACITY vs FOUNDATION DEPTH

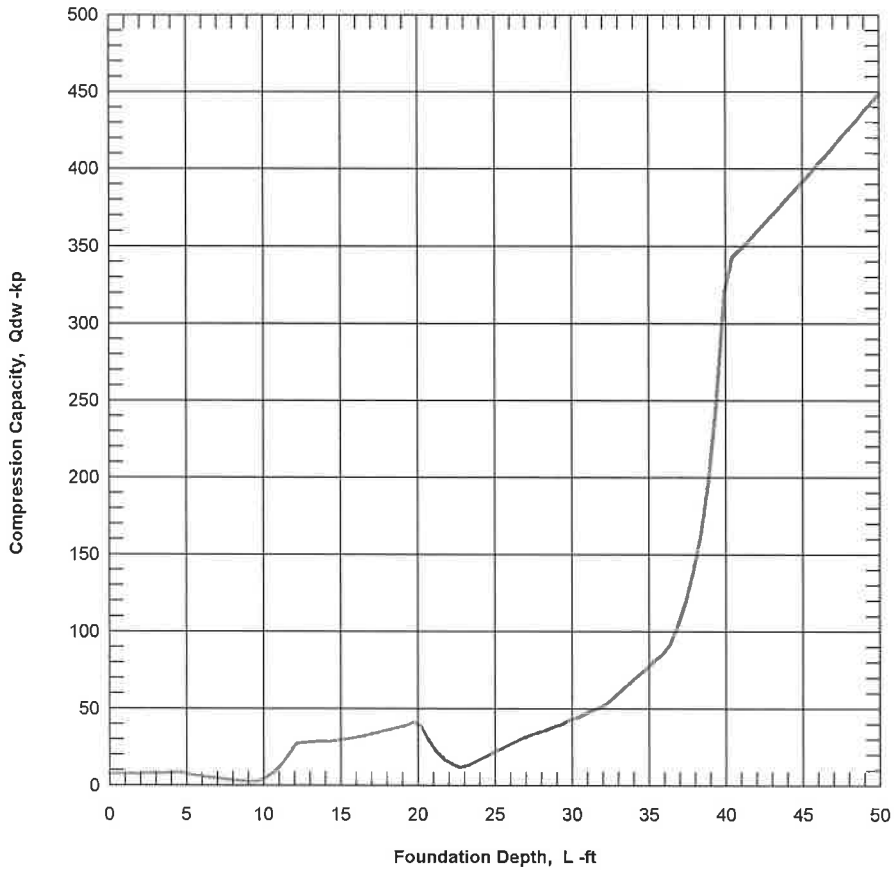

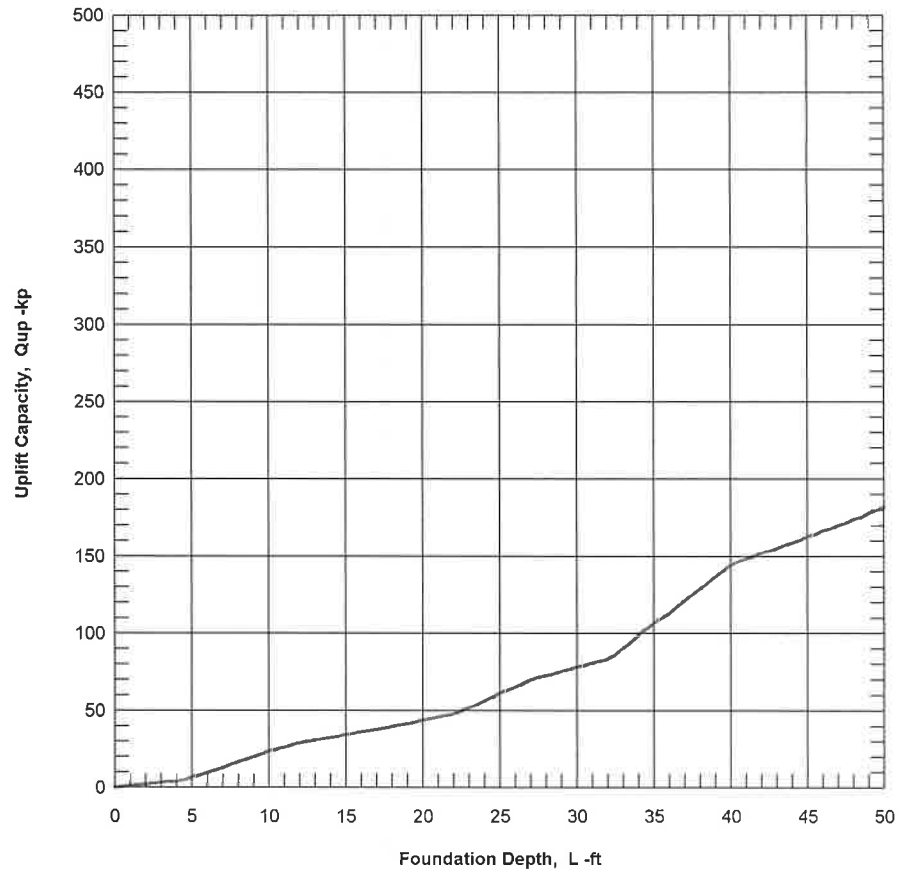

CivilTech Software

16G136 - 36-in-dia Drilled Pier
45-ft-deep; Using B-4 and B-3 data

Figure 1

```
*************************************************************
                    ALLPILE 7
       VERTICAL ANALYSIS DETAILED OUTPUT
        Copyright by CivilTech Software
                www.civiltech.com
*************************************************************
Licensed to
Date: 7/8/2019  File: P:\Geotechnical\2016 Geotechnical\16G136 Alston 2 CI Bldgs Long Beach\Deep Foundation Design\Apr 28 2016\Boring B-4 and B-3\36india_45ftdeep_drilled_01.alp
1.0

Title 1: 16G136 - 36-in-dia Drilled Pier
Title 2: 45-ft-deep; Using B-4 and B-3 data

ALLPILE INPUT DATA:
**_____________________________________________________**

* Pile Type Page *
Unit: English
Diameter more than 24in (61cm).  For bell section, select "Belled" in Diameter Variation of Pile Section Screen. Recommendation: 2 to 4 in Item 3 of Page F.
Pile Type: Drilled Shaft (dia >24 in. or 61 cm)

* Pile Profile *
Foundation Depth: 45.0 -ft
Top Height: 0 -ft
Slope Angle: 0
Pile Angle: 0

* Pile Properties *
Zs      Width   Area    Perim.     I       E      Weight  Mix     Out     In      Other.  Type
-ft     -in     -in2    -in     -in4    -kp/i2  -kp/f   %       Side    Side    Par.
_____________________________________________________________________________________________
0.0     36      1017.9  113.1   82448.0 3000    1.060   0.0     4       4       0       Concrete (smooth)
45.0                                                                                     Pile Tip
Note:  Mix = % of Inside material/Outside material

Group Type: 0
Top Type: 1

Water Table: 10 -ft
Ground Elevation: 0 -ft

* Soil Properties *
Zs      Gamma   Phi     C       K       E50/Dr  Nspt    Type    Soil
-ft     -lb/f3  o       -kp/f2  -lb/i3   - %
0.0     90.0    0.0     0.500   313.1   0.87    10      3       Fill
4.5     117.0   0.0     0.50    103.7   1.30    5       1       Alluvium
10.0    117.0   0.0     0.500   136.8   1.19    6       1       Alluvium
12.0    52.6    32.0    0.00    32.9    35.04   10      4       Alluvium
19.5    56.8    32.0    0.00    50.8    45.73   15      4       Alluvium
22.0    70.4    32.0    0.500   867.8   0.56    21      3       Alluvium
27.0    60.4    35.0    0.00    90.0    63.67   28      4       Alluvium
32.0    70.2    0.0     1.500   814.1   0.57    20      2       Alluvium
40.0    60.7    37.0    0.00    97.3    66.49   31      4       Alluvium
42.5    66.4    37.0    0.00    148.9   83.39   48      4       Alluvium

Surcharge Pressure on ground: 0 -kp/f2

* Zero Friction *
Zero Friction Start: 0 -ft      End: 4.5 -ft

* Negative Friction *
Negative Friction Start: 4.5 -ft        End: 19.5 -ft   with Factor: 1

ALLPILE ANALYSIS AND RESULTS:
**_____________________________________________________**

Pile Profile and Loading:
        Piletype: Drilled Shaft (dia >24 in. or 61 cm)
        Pile Length, L= 45.0 -ft
        Top Height, H= 0 -ft
        Slope Angle, As= 0
        Batter Angle, Ab= 0.00

        *To consider the influence of different soils below the pile tip, bearing stratum is defined
        from pile tip extending to 4 Diameter of pile, which is 12.0-ft (Input Page F, Item 3)

Single Pile, Vertical Analysis:
        Vertical Load with Load factor, Q= 366.0 -kp
        Vertical Load with Load factor and Pile Cap, Q= 366.0 -kp
          Load Factor for Vertical Loads= 1.0
          Vertical Loads Supported by Pile Cap: 0 %
          Kdown= 0.7      Kup= 0.4        Ka= 1.00


From Ztip=45.0 to 57.0-ft  Average Properties: Es= 767.92-kp/f2  C=0.00-kp/f2  Friction=37.00 Cp=0.14  Ksand=1.00
Limits of Max. tip resistance, q_lim= N/A
Batter Angle, Ab= 0.00    Batter Factor, Kbat= 1.00
Qtip_dw=881.5-kp  based on qult=124.7-kp/f2  and Base Area=7.1-ft2
Qtip_up=0.0-kp  and Base Area=0.0-ft2


TIP RESISTANCE (Down) CALCULATION:
Tip Depth= 45.0-ft Critical Depth Ratio Z/D= 20 Critical Depth= 60.0-ft
Equivalent Width of Tip= 3.00-ft,   Tip Area= 7.07-ft2   Tip Diameter= 3.00-ft
Bearing stratum from pile tip extending to 4 Diameter of pile. Bearing stratum= 12.00-ft
Btip: width at pile tip= 3.00-ft (For group pile, it is equivalent width).
Phi & C are average value in bearing stratum.
Batter Angle= 0.00,    Batter Factor for Tip and Side= 1.00

Ztip    Z/D     Z_lim   q_lim   Width   Area'   Phi     C       Nq      Nc      Sv      qult    Qtip_dw
-ft             -ft     -kp/f2  -ft     -ft2    - o     -kp/f2                  -kp/f2  -kp/f2  -kp
_____________________________________________________________________________________________
45.0    20.0    60.0    N/A     3.00    7.07    37.0    0.00    37.1    9.0     3.4     124.7   881.5

 Ztip - Depth of pile tip from ground surface (Zs)
 D - Pile average diameter (below ground) for calculation of critical depth.  D=3.00-ft
 Z/D - Critical depth (for tip resistances) as ratio of depth/diameter. Vertical stress will be constant below critical depth
 Z_lim - Critical depth, calculated from Z/D (for tip resistances)
 q_lim -  Limit of Maximum tip resistance
 Btip: width or diameter at pile tip
 Bearing stratum: A stratum from  pile tip extending to some depth. Average soil properties in the stratum are used for bearing calculation


SIDE RESISTANCE (Uplift & Down) CALCULATION:
D       Z/D     Z_lim   Sf_lim  K_dw    K_up    dz
-ft             -ft     -kp/f2                  -ft
_____________________________________________
```

3.00 20.0 60.00 N/A 0.7 0.4 0.090

D - Pile average diameter for calculation of critical depth
Z/D - Critical depth (for side resistances) as ratio of depth/diameter. Vertical stress will be constant below critical depth
Z_lim - Critical depth calculated from Z/D (for side resistances)
Sf_lim - Limit of Maximum side resistance

Users Setting: Ka=1, which is constant. Ca=KcKaC=KcC

SIDE RESISTANCE (Up & Down) CALCULATION vs DEPTH:
Calculation is based on segment dZ= 0.09

Zs -ft	Prem -ft	Sv -kp/f2	Phi - o	Kf(<2) Delta	Delta - o	f_dw -kp/f2	f_up -kp/f2	C -kp/f2	Ka	Kc(<2) Ca	Ca_dw -kp/f2	Ca_up -kp/f2	Sf_dw -kp/f2	Sf_up -kp/f2	Weight -kp	Qneg -kp	Q_dw -kp	Q_up -kp	Torsion -kp-f
45.00	9.43	3.36	37.0	0.70	25.9	1.14	0.65	0.00	1.00	1.00	0.00	0.00	0.00	0.00	0.00	0.00	881.5	0.0	0.0
44.91	9.43	3.36	37.0	0.70	25.9	1.14	0.65	0.00	1.00	1.00	0.00	0.00	1.14	0.65	0.06	0.00	882.5	0.6	1.1
44.82	9.43	3.35	37.0	0.70	25.9	1.14	0.65	0.00	1.00	1.00	0.00	0.00	1.14	0.65	0.11	0.00	883.5	1.2	2.3
44.73	9.43	3.34	37.0	0.70	25.9	1.14	0.65	0.00	1.00	1.00	0.00	0.00	1.14	0.65	0.17	0.00	884.4	1.8	3.4
44.64	9.43	3.34	37.0	0.70	25.9	1.13	0.65	0.00	1.00	1.00	0.00	0.00	1.13	0.65	0.22	0.00	885.4	2.4	4.6
44.55	9.43	3.33	37.0	0.70	25.9	1.13	0.65	0.00	1.00	1.00	0.00	0.00	1.13	0.65	0.28	0.00	886.4	3.0	5.7
44.46	9.43	3.33	37.0	0.70	25.9	1.13	0.65	0.00	1.00	1.00	0.00	0.00	1.13	0.65	0.33	0.00	887.3	3.6	6.8
44.37	9.43	3.32	37.0	0.70	25.9	1.13	0.64	0.00	1.00	1.00	0.00	0.00	1.13	0.64	0.39	0.00	888.3	4.2	8.0
44.28	9.43	3.31	37.0	0.70	25.9	1.13	0.64	0.00	1.00	1.00	0.00	0.00	1.13	0.64	0.45	0.00	889.3	4.9	9.1
44.19	9.43	3.31	37.0	0.70	25.9	1.12	0.64	0.00	1.00	1.00	0.00	0.00	1.12	0.64	0.50	0.00	890.2	5.5	10.2
44.10	9.43	3.30	37.0	0.70	25.9	1.12	0.64	0.00	1.00	1.00	0.00	0.00	1.12	0.64	0.56	0.00	891.2	6.1	11.3
44.01	9.43	3.30	37.0	0.70	25.9	1.12	0.64	0.00	1.00	1.00	0.00	0.00	1.12	0.64	0.61	0.00	892.1	6.7	12.5
43.92	9.43	3.29	37.0	0.70	25.9	1.12	0.64	0.00	1.00	1.00	0.00	0.00	1.12	0.64	0.67	0.00	893.1	7.3	13.6
43.83	9.43	3.28	37.0	0.70	25.9	1.12	0.64	0.00	1.00	1.00	0.00	0.00	1.12	0.64	0.73	0.00	894.0	7.9	14.7
43.74	9.43	3.28	37.0	0.70	25.9	1.11	0.64	0.00	1.00	1.00	0.00	0.00	1.11	0.64	0.78	0.00	895.0	8.4	15.8
43.65	9.43	3.27	37.0	0.70	25.9	1.11	0.64	0.00	1.00	1.00	0.00	0.00	1.11	0.64	0.84	0.00	895.9	9.0	16.9
43.56	9.43	3.27	37.0	0.70	25.9	1.11	0.63	0.00	1.00	1.00	0.00	0.00	1.11	0.63	0.89	0.00	896.8	9.6	18.0
43.47	9.43	3.26	37.0	0.70	25.9	1.11	0.63	0.00	1.00	1.00	0.00	0.00	1.11	0.63	0.95	0.00	897.8	10.2	19.1
43.38	9.43	3.25	37.0	0.70	25.9	1.11	0.63	0.00	1.00	1.00	0.00	0.00	1.11	0.63	1.00	0.00	898.7	10.8	20.3
43.29	9.43	3.25	37.0	0.70	25.9	1.10	0.63	0.00	1.00	1.00	0.00	0.00	1.10	0.63	1.06	0.00	899.7	11.4	21.4
43.20	9.43	3.24	37.0	0.70	25.9	1.10	0.63	0.00	1.00	1.00	0.00	0.00	1.10	0.63	1.12	0.00	900.6	12.0	22.5
43.11	9.43	3.24	37.0	0.70	25.9	1.10	0.63	0.00	1.00	1.00	0.00	0.00	1.10	0.63	1.17	0.00	901.5	12.6	23.6
43.02	9.43	3.23	37.0	0.70	25.9	1.10	0.63	0.00	1.00	1.00	0.00	0.00	1.10	0.63	1.23	0.00	902.5	13.2	24.7
42.93	9.43	3.22	37.0	0.70	25.9	1.10	0.63	0.00	1.00	1.00	0.00	0.00	1.10	0.63	1.28	0.00	903.4	13.8	25.8
42.84	9.43	3.22	37.0	0.70	25.9	1.09	0.63	0.00	1.00	1.00	0.00	0.00	1.09	0.63	1.34	0.00	904.3	14.4	26.9
42.75	9.43	3.21	37.0	0.70	25.9	1.09	0.62	0.00	1.00	1.00	0.00	0.00	1.09	0.62	1.40	0.00	905.3	14.9	28.0
42.66	9.43	3.21	37.0	0.70	25.9	1.09	0.62	0.00	1.00	1.00	0.00	0.00	1.09	0.62	1.45	0.00	906.2	15.5	29.0
42.57	9.43	3.20	37.0	0.70	25.9	1.09	0.62	0.00	1.00	1.00	0.00	0.00	1.09	0.62	1.51	0.00	907.1	16.1	30.1
42.47	9.43	3.19	37.0	0.70	25.9	1.09	0.62	0.00	1.00	1.00	0.00	0.00	1.09	0.62	1.56	0.00	908.0	16.7	31.2
42.38	9.43	3.19	37.0	0.70	25.9	1.08	0.62	0.00	1.00	1.00	0.00	0.00	1.08	0.62	1.62	0.00	909.0	17.3	32.3
42.29	9.43	3.18	37.0	0.70	25.9	1.08	0.62	0.00	1.00	1.00	0.00	0.00	1.08	0.62	1.67	0.00	909.9	17.9	33.4
42.20	9.43	3.18	37.0	0.70	25.9	1.08	0.62	0.00	1.00	1.00	0.00	0.00	1.08	0.62	1.73	0.00	910.8	18.4	34.5
42.11	9.43	3.17	37.0	0.70	25.9	1.08	0.62	0.00	1.00	1.00	0.00	0.00	1.08	0.62	1.79	0.00	911.7	19.0	35.6
42.02	9.43	3.17	37.0	0.70	25.9	1.08	0.62	0.00	1.00	1.00	0.00	0.00	1.08	0.62	1.84	0.00	912.6	19.6	36.6
41.93	9.43	3.16	37.0	0.70	25.9	1.07	0.61	0.00	1.00	1.00	0.00	0.00	1.07	0.61	1.90	0.00	913.5	20.2	37.7
41.84	9.43	3.16	37.0	0.70	25.9	1.07	0.61	0.00	1.00	1.00	0.00	0.00	1.07	0.61	1.95	0.00	914.5	20.8	38.8
41.75	9.43	3.15	37.0	0.70	25.9	1.07	0.61	0.00	1.00	1.00	0.00	0.00	1.07	0.61	2.01	0.00	915.4	21.3	39.9
41.66	9.43	3.15	37.0	0.70	25.9	1.07	0.61	0.00	1.00	1.00	0.00	0.00	1.07	0.61	2.07	0.00	916.3	21.9	40.9
41.57	9.43	3.14	37.0	0.70	25.9	1.07	0.61	0.00	1.00	1.00	0.00	0.00	1.07	0.61	2.12	0.00	917.2	22.5	42.0
41.48	9.43	3.13	37.0	0.70	25.9	1.07	0.61	0.00	1.00	1.00	0.00	0.00	1.07	0.61	2.18	0.00	918.1	23.1	43.1
41.39	9.43	3.13	37.0	0.70	25.9	1.06	0.61	0.00	1.00	1.00	0.00	0.00	1.06	0.61	2.23	0.00	919.0	23.6	44.1
41.30	9.43	3.12	37.0	0.70	25.9	1.06	0.61	0.00	1.00	1.00	0.00	0.00	1.06	0.61	2.29	0.00	919.9	24.2	45.2
41.21	9.43	3.12	37.0	0.70	25.9	1.06	0.61	0.00	1.00	1.00	0.00	0.00	1.06	0.61	2.34	0.00	920.8	24.8	46.3
41.12	9.43	3.11	37.0	0.70	25.9	1.06	0.60	0.00	1.00	1.00	0.00	0.00	1.06	0.60	2.40	0.00	921.7	25.3	47.3
41.03	9.43	3.11	37.0	0.70	25.9	1.06	0.60	0.00	1.00	1.00	0.00	0.00	1.06	0.60	2.46	0.00	922.6	25.9	48.4
40.94	9.43	3.10	37.0	0.70	25.9	1.05	0.60	0.00	1.00	1.00	0.00	0.00	1.05	0.60	2.51	0.00	923.5	26.5	49.4
40.85	9.43	3.10	37.0	0.70	25.9	1.05	0.60	0.00	1.00	1.00	0.00	0.00	1.05	0.60	2.57	0.00	924.4	27.0	50.5
40.76	9.43	3.09	37.0	0.70	25.9	1.05	0.60	0.00	1.00	1.00	0.00	0.00	1.05	0.60	2.62	0.00	925.3	27.6	51.5
40.67	9.43	3.09	37.0	0.70	25.9	1.05	0.60	0.00	1.00	1.00	0.00	0.00	1.05	0.60	2.68	0.00	926.2	28.2	52.6
40.58	9.43	3.08	37.0	0.70	25.9	1.05	0.60	0.00	1.00	1.00	0.00	0.00	1.05	0.60	2.73	0.00	927.1	28.7	53.6
40.49	9.43	3.07	37.0	0.70	25.9	1.04	0.60	0.00	1.00	1.00	0.00	0.00	1.04	0.60	2.79	0.00	927.9	29.3	54.7
40.40	9.43	3.07	37.0	0.70	25.9	1.04	0.60	0.00	1.00	1.00	0.00	0.00	1.04	0.60	2.85	0.00	928.8	29.9	55.7
40.31	9.43	3.06	37.0	0.70	25.9	1.04	0.59	0.00	1.00	1.00	0.00	0.00	1.04	0.59	2.90	0.00	929.7	30.4	56.8
40.22	9.43	3.06	37.0	0.70	25.9	1.04	0.59	0.00	1.00	1.00	0.00	0.00	1.04	0.59	2.96	0.00	930.6	31.0	57.8
40.13	9.43	3.05	37.0	0.70	25.9	1.04	0.59	0.00	1.00	1.00	0.00	0.00	1.04	0.59	3.01	0.00	931.5	31.5	58.8
40.04	9.43	3.05	37.0	0.70	25.9	1.04	0.59	0.00	1.00	1.00	0.00	0.00	1.04	0.59	3.07	0.00	932.4	32.1	59.9
39.95	9.43	3.04	0.0	0.70	0.0	0.00	0.00	1.50	1.00	1.00	1.50	1.50	1.50	1.50	3.13	0.00	933.6	33.4	61.8
39.86	9.43	3.03	0.0	0.70	0.0	0.00	0.00	1.50	1.00	1.00	1.50	1.50	1.50	1.50	3.18	0.00	934.9	34.8	63.7
39.77	9.43	3.03	0.0	0.70	0.0	0.00	0.00	1.50	1.00	1.00	1.50	1.50	1.50	1.50	3.24	0.00	936.2	36.1	65.6
39.68	9.43	3.02	0.0	0.70	0.0	0.00	0.00	1.50	1.00	1.00	1.50	1.50	1.50	1.50	3.29	0.00	937.5	37.4	67.5
39.59	9.43	3.02	0.0	0.70	0.0	0.00	0.00	1.50	1.00	1.00	1.50	1.50	1.50	1.50	3.35	0.00	938.7	38.8	69.4
39.50	9.43	3.01	0.0	0.70	0.0	0.00	0.00	1.50	1.00	1.00	1.50	1.50	1.50	1.50	3.40	0.00	940.0	40.1	71.4
39.41	9.43	3.00	0.0	0.70	0.0	0.00	0.00	1.50	1.00	1.00	1.50	1.50	1.50	1.50	3.46	0.00	941.3	41.4	73.3
39.32	9.43	3.00	0.0	0.70	0.0	0.00	0.00	1.50	1.00	1.00	1.50	1.50	1.50	1.50	3.52	0.00	942.6	42.8	75.2
39.23	9.43	2.99	0.0	0.70	0.0	0.00	0.00	1.50	1.00	1.00	1.50	1.50	1.50	1.50	3.57	0.00	943.8	44.1	77.1
39.14	9.43	2.98	0.0	0.70	0.0	0.00	0.00	1.50	1.00	1.00	1.50	1.50	1.50	1.50	3.63	0.00	945.1	45.4	79.0
39.05	9.43	2.98	0.0	0.70	0.0	0.00	0.00	1.50	1.00	1.00	1.50	1.50	1.50	1.50	3.68	0.00	946.4	46.7	80.9
38.96	9.43	2.97	0.0	0.70	0.0	0.00	0.00	1.50	1.00	1.00	1.50	1.50	1.50	1.50	3.74	0.00	947.7	48.1	82.8
38.87	9.43	2.96	0.0	0.70	0.0	0.00	0.00	1.50	1.00	1.00	1.50	1.50	1.50	1.50	3.80	0.00	948.9	49.4	84.7
38.78	9.43	2.96	0.0	0.70	0.0	0.00	0.00	1.50	1.00	1.00	1.50	1.50	1.50	1.50	3.85	0.00	950.2	50.7	86.7
38.69	9.43	2.95	0.0	0.70	0.0	0.00	0.00	1.50	1.00	1.00	1.50	1.50	1.50	1.50	3.91	0.00	951.5	52.1	88.6
38.60	9.43	2.95	0.0	0.70	0.0	0.00	0.00	1.50	1.00	1.00	1.50	1.50	1.50	1.50	3.96	0.00	952.8	53.4	90.5
38.51	9.43	2.94	0.0	0.70	0.0	0.00	0.00	1.50	1.00	1.00	1.50	1.50	1.50	1.50	4.02	0.00	954.0	54.7	92.4
38.42	9.43	2.93	0.0	0.70	0.0	0.00	0.00	1.50	1.00	1.00	1.50	1.50	1.50	1.50	4.07	0.00	955.3	56.1	94.3
38.33	9.43	2.93	0.0	0.70	0.0	0.00	0.00	1.50	1.00	1.00	1.50	1.50	1.50	1.50	4.13	0.00	956.6	57.4	96.2
38.24	9.43	2.92	0.0	0.70	0.0	0.00	0.00	1.50	1.00	1.00	1.50	1.50	1.50	1.50	4.19	0.00	957.9	58.7	98.1
38.15	9.43	2.91	0.0	0.70	0.0	0.00	0.00	1.50	1.00	1.00	1.50	1.50	1.50	1.50	4.24	0.00	959.1	60.1	100.0
38.06	9.43	2.91	0.0	0.70	0.0	0.00	0.00	1.50	1.00	1.00	1.50	1.50	1.50	1.50	4.30	0.00	960.4	61.4	102.0
37.97	9.43	2.90	0.0	0.70	0.0	0.00	0.00	1.50	1.00	1.00	1.50	1.50	1.50	1.50	4.35	0.00	961.7	62.7	103.9
37.88	9.43	2.89	0.0	0.70	0.0	0.00	0.00	1.50	1.00	1.00	1.50	1.50	1.50	1.50	4.41	0.00	963.0	64.0	105.8
37.79	9.43	2.89	0.0	0.70	0.0	0.00	0.00	1.50	1.00	1.00	1.50	1.50	1.50	1.50	4.47	0.00	964.2	65.4	107.7
37.70	9.43	2.88	0.0	0.70	0.0	0.00	0.00	1.50	1.00	1.00	1.50	1.50	1.50	1.50	4.52	0.00	965.5	66.7	109.6
37.61	9.43	2.88	0.0	0.70	0.0	0.00	0.00	1.50	1.00	1.00	1.50	1.50	1.50	1.50	4.58	0.00	966.8	68.0	111.5
37.52	9.43	2.87	0.0	0.70	0.0	0.00	0.00	1.50	1.00	1.00	1.50	1.50	1.50	1.50	4.63	0.00	968.1	69.4	113.4
37.42	9.43	2.86	0.0	0.70	0.0	0.00	0.00	1.50	1.00	1.00	1.50	1.50	1.50	1.50	4.69	0.00	969.3	70.7	115.3
37.33	9.43	2.86	0.0	0.70	0.0	0.00	0.00	1.50	1.00	1.00	1.50	1.50	1.50	1.50	4.74	0.00	970.6	72.0	117.3
37.24	9.43	2.85	0.0	0.70	0.0	0.00	0.00	1.50	1.00	1.00	1.50	1.50	1.50	1.50	4.80	0.00	971.9	73.4	119.2
37.15	9.43	2.84	0.0	0.70	0.0	0.00	0.00	1.50	1.00	1.00	1.50	1.50	1.50	1.50	4.86	0.00	973.2	74.7	121.1
37.06	9.43	2.84	0.0	0.70	0.0	0.00	0.00	1.50	1.00	1.00	1.50	1.50	1.50	1.50	4.91	0.00	974.4	76.0	123.0
36.97	9.43	2.83	0.0	0.70	0.0	0.00	0.00	1.50	1.00	1.00	1.50	1.50	1.50	1.50	4.97	0.00	975.7	77.3	124.9
36.88	9.43	2.83	0.0	0.70	0.0	0.00	0.00	1.50	1.00	1.00	1.50	1.50	1.50	1.50	5.02	0.00	977.0	78.7	126.8
36.79	9.43	2.82	0.0	0.70	0.0	0.00	0.00	1.50	1.00	1.00	1.50	1.50	1.50	1.50	5.08	0.00	978.3	80.0	128.7
36.70	9.43	2.81	0.0	0.70	0.0	0.00	0.00	1.50	1.00	1.00	1.50	1.50	1.50	1.50	5.13	0.00	979.5	81.3	130.6
36.61	9.43	2.81	0.0	0.70	0.0	0.00	0.00	1.50	1.00	1.00	1.50	1.50	1.50	1.50	5.19	0.00	980.8	82.7	132.6
36.52	9.43	2.80	0.0	0.70	0.0	0.00	0.00	1.50	1.00	1.00	1.50	1.50	1.50	1.50	5.25	0.00	982.1	84.0	134.5
36.43	9.43	2.79	0.0	0.70	0.0	0.00	0.00	1.50	1.00	1.00	1.50	1.50	1.50	1.50	5.30	0.00	983.4	85.3	136.4
36.34	9.43	2.79	0.0	0.70	0.0	0.00	0.00	1.50	1.00	1.00	1.50	1.50	1.50	1.50	5.36	0.00	984.6	86.7	138.3
36.25	9.43	2.78	0.0	0.70	0.0	0.00	0.00	1.50	1.00	1.00	1.50	1.50	1.50	1.50	5.41	0.00	985.9	88.0	140.2
36.16	9.43	2.77	0.0	0.70	0.0	0.00	0.00	1.50	1.00	1.00	1.50	1.50	1.50	1.50	5.47	0.00	987.2	89.3	142.1
36.07	9.43	2.77	0.0	0.70	0.0	0.00	0.00	1.50	1.00	1.00	1.50	1.50	1.50	1.50	5.53	0.00	988.5	90.7	144.0
35.98	9.43	2.76	0.0	0.70	0.0	0.00	0.00	1.50	1.00	1.00	1.50	1.50	1.50	1.50	5.58	0.00	989.7	92.0	145.9
35.89	9.43	2.76	0.0	0.70	0.0	0.00	0.00	1.50	1.00	1.00	1.50	1.50	1.50	1.50	5.64	0.00	991.0	93.3	147.9

35.80	9.43	2.75	0.0	0.70	0.0	0.00	0.00	1.50	1.00	1.00	1.50	1.50	1.50	1.50	5.69	0.00	992.3	94.6	149.8
35.71	9.43	2.74	0.0	0.70	0.0	0.00	0.00	1.50	1.00	1.00	1.50	1.50	1.50	1.50	5.75	0.00	993.6	96.0	151.7
35.62	9.43	2.74	0.0	0.70	0.0	0.00	0.00	1.50	1.00	1.00	1.50	1.50	1.50	1.50	5.80	0.00	994.8	97.3	153.6
35.53	9.43	2.73	0.0	0.70	0.0	0.00	0.00	1.50	1.00	1.00	1.50	1.50	1.50	1.50	5.86	0.00	996.1	98.6	155.5
35.44	9.43	2.72	0.0	0.70	0.0	0.00	0.00	1.50	1.00	1.00	1.50	1.50	1.50	1.50	5.91	0.00	997.4	100.0	157.4
35.35	9.43	2.72	0.0	0.70	0.0	0.00	0.00	1.50	1.00	1.00	1.50	1.50	1.50	1.50	5.97	0.00	998.7	101.3	159.3
35.26	9.43	2.71	0.0	0.70	0.0	0.00	0.00	1.50	1.00	1.00	1.50	1.50	1.50	1.50	6.03	0.00	999.9	102.6	161.2
35.17	9.43	2.70	0.0	0.70	0.0	0.00	0.00	1.50	1.00	1.00	1.50	1.50	1.50	1.50	6.08	0.00	1001.2	104.0	163.2
35.08	9.43	2.70	0.0	0.70	0.0	0.00	0.00	1.50	1.00	1.00	1.50	1.50	1.50	1.50	6.14	0.00	1002.5	105.3	165.1
34.99	9.43	2.69	0.0	0.70	0.0	0.00	0.00	1.50	1.00	1.00	1.50	1.50	1.50	1.50	6.20	0.00	1003.8	106.6	167.0
34.90	9.43	2.69	0.0	0.70	0.0	0.00	0.00	1.50	1.00	1.00	1.50	1.50	1.50	1.50	6.25	0.00	1005.0	108.0	168.9
34.81	9.43	2.68	0.0	0.70	0.0	0.00	0.00	1.50	1.00	1.00	1.50	1.50	1.50	1.50	6.31	0.00	1006.3	109.3	170.8
34.72	9.43	2.67	0.0	0.70	0.0	0.00	0.00	1.50	1.00	1.00	1.50	1.50	1.50	1.50	6.36	0.00	1007.6	110.6	172.7
34.63	9.43	2.67	0.0	0.70	0.0	0.00	0.00	1.50	1.00	1.00	1.50	1.50	1.50	1.50	6.42	0.00	1008.9	111.9	174.6
34.54	9.43	2.66	0.0	0.70	0.0	0.00	0.00	1.50	1.00	1.00	1.50	1.50	1.50	1.50	6.47	0.00	1010.1	113.3	176.5
34.45	9.43	2.65	0.0	0.70	0.0	0.00	0.00	1.50	1.00	1.00	1.50	1.50	1.50	1.50	6.53	0.00	1011.4	114.6	178.5
34.36	9.43	2.65	0.0	0.70	0.0	0.00	0.00	1.50	1.00	1.00	1.50	1.50	1.50	1.50	6.59	0.00	1012.7	115.9	180.4
34.27	9.43	2.64	0.0	0.70	0.0	0.00	0.00	1.50	1.00	1.00	1.50	1.50	1.50	1.50	6.64	0.00	1014.0	117.3	182.3
34.18	9.43	2.64	0.0	0.70	0.0	0.00	0.00	1.50	1.00	1.00	1.50	1.50	1.50	1.50	6.70	0.00	1015.2	118.6	184.2
34.09	9.43	2.63	0.0	0.70	0.0	0.00	0.00	1.50	1.00	1.00	1.50	1.50	1.50	1.50	6.75	0.00	1016.5	119.9	186.1
34.00	9.43	2.62	0.0	0.70	0.0	0.00	0.00	1.50	1.00	1.00	1.50	1.50	1.50	1.50	6.81	0.00	1017.8	121.3	188.0
33.91	9.43	2.62	0.0	0.70	0.0	0.00	0.00	1.50	1.00	1.00	1.50	1.50	1.50	1.50	6.87	0.00	1019.1	122.6	189.9
33.82	9.43	2.61	0.0	0.70	0.0	0.00	0.00	1.50	1.00	1.00	1.50	1.50	1.50	1.50	6.92	0.00	1020.3	123.9	191.8
33.73	9.43	2.60	0.0	0.70	0.0	0.00	0.00	1.50	1.00	1.00	1.50	1.50	1.50	1.50	6.98	0.00	1021.6	125.3	193.8
33.64	9.43	2.60	0.0	0.70	0.0	0.00	0.00	1.50	1.00	1.00	1.50	1.50	1.50	1.50	7.03	0.00	1022.9	126.6	195.7
33.55	9.43	2.59	0.0	0.70	0.0	0.00	0.00	1.50	1.00	1.00	1.50	1.50	1.50	1.50	7.09	0.00	1024.1	127.9	197.6
33.46	9.43	2.58	0.0	0.70	0.0	0.00	0.00	1.50	1.00	1.00	1.50	1.50	1.50	1.50	7.14	0.00	1025.4	129.2	199.5
33.37	9.43	2.58	0.0	0.70	0.0	0.00	0.00	1.50	1.00	1.00	1.50	1.50	1.50	1.50	7.20	0.00	1026.7	130.6	201.4
33.28	9.43	2.57	0.0	0.70	0.0	0.00	0.00	1.50	1.00	1.00	1.50	1.50	1.50	1.50	7.26	0.00	1028.0	131.9	203.3
33.19	9.43	2.57	0.0	0.70	0.0	0.00	0.00	1.50	1.00	1.00	1.50	1.50	1.50	1.50	7.31	0.00	1029.2	133.2	205.2
33.10	9.43	2.56	0.0	0.70	0.0	0.00	0.00	1.50	1.00	1.00	1.50	1.50	1.50	1.50	7.37	0.00	1030.5	134.6	207.1
33.01	9.43	2.55	0.0	0.70	0.0	0.00	0.00	1.50	1.00	1.00	1.50	1.50	1.50	1.50	7.42	0.00	1031.8	135.9	209.1
32.92	9.43	2.55	0.0	0.70	0.0	0.00	0.00	1.50	1.00	1.00	1.50	1.50	1.50	1.50	7.48	0.00	1033.1	137.2	211.0
32.83	9.43	2.54	0.0	0.70	0.0	0.00	0.00	1.50	1.00	1.00	1.50	1.50	1.50	1.50	7.53	0.00	1034.3	138.6	212.9
32.74	9.43	2.53	0.0	0.70	0.0	0.00	0.00	1.50	1.00	1.00	1.50	1.50	1.50	1.50	7.59	0.00	1035.6	139.9	214.8
32.65	9.43	2.53	0.0	0.70	0.0	0.00	0.00	1.50	1.00	1.00	1.50	1.50	1.50	1.50	7.65	0.00	1036.9	141.2	216.7
32.56	9.43	2.52	0.0	0.70	0.0	0.00	0.00	1.50	1.00	1.00	1.50	1.50	1.50	1.50	7.70	0.00	1038.2	142.6	218.6
32.46	9.43	2.51	0.0	0.70	0.0	0.00	0.00	1.50	1.00	1.00	1.50	1.50	1.50	1.50	7.76	0.00	1039.4	143.9	220.5
32.37	9.43	2.51	0.0	0.70	0.0	0.00	0.00	1.50	1.00	1.00	1.50	1.50	1.50	1.50	7.81	0.00	1040.7	145.2	222.4
32.28	9.43	2.50	0.0	0.70	0.0	0.00	0.00	1.50	1.00	1.00	1.50	1.50	1.50	1.50	7.87	0.00	1042.0	146.5	224.4
32.19	9.43	2.50	0.0	0.70	0.0	0.00	0.00	1.50	1.00	1.00	1.50	1.50	1.50	1.50	7.93	0.00	1043.3	147.9	226.3
32.10	9.43	2.49	0.0	0.70	0.0	0.00	0.00	1.50	1.00	1.00	1.50	1.50	1.50	1.50	7.98	0.00	1044.5	149.2	228.2
32.01	9.43	2.48	0.0	0.70	0.0	0.00	0.00	1.50	1.00	1.00	1.50	1.50	1.50	1.50	8.04	0.00	1045.8	150.5	230.1
31.92	9.43	2.48	35.0	0.70	24.5	0.79	0.45	0.00	1.00	1.00	0.00	0.00	0.79	0.45	8.09	0.00	1046.5	151.0	230.9
31.83	9.43	2.47	35.0	0.70	24.5	0.79	0.45	0.00	1.00	1.00	0.00	0.00	0.79	0.45	8.15	0.00	1047.2	151.4	231.7
31.74	9.43	2.47	35.0	0.70	24.5	0.79	0.45	0.00	1.00	1.00	0.00	0.00	0.79	0.45	8.20	0.00	1047.8	151.9	232.5
31.65	9.43	2.46	35.0	0.70	24.5	0.79	0.45	0.00	1.00	1.00	0.00	0.00	0.79	0.45	8.26	0.00	1048.5	152.3	233.2
31.56	9.43	2.46	35.0	0.70	24.5	0.78	0.45	0.00	1.00	1.00	0.00	0.00	0.78	0.45	8.32	0.00	1049.2	152.7	234.0
31.47	9.43	2.45	35.0	0.70	24.5	0.78	0.45	0.00	1.00	1.00	0.00	0.00	0.78	0.45	8.37	0.00	1049.8	153.2	234.8
31.38	9.43	2.45	35.0	0.70	24.5	0.78	0.45	0.00	1.00	1.00	0.00	0.00	0.78	0.45	8.43	0.00	1050.5	153.6	235.6
31.29	9.43	2.44	35.0	0.70	24.5	0.78	0.44	0.00	1.00	1.00	0.00	0.00	0.78	0.44	8.48	0.00	1051.2	154.0	236.4
31.20	9.43	2.43	35.0	0.70	24.5	0.78	0.44	0.00	1.00	1.00	0.00	0.00	0.78	0.44	8.54	0.00	1051.8	154.5	237.2
31.11	9.43	2.43	35.0	0.70	24.5	0.77	0.44	0.00	1.00	1.00	0.00	0.00	0.77	0.44	8.60	0.00	1052.5	154.9	237.9
31.02	9.43	2.42	35.0	0.70	24.5	0.77	0.44	0.00	1.00	1.00	0.00	0.00	0.77	0.44	8.65	0.00	1053.1	155.3	238.7
30.93	9.43	2.42	35.0	0.70	24.5	0.77	0.44	0.00	1.00	1.00	0.00	0.00	0.77	0.44	8.71	0.00	1053.8	155.8	239.5
30.84	9.43	2.41	35.0	0.70	24.5	0.77	0.44	0.00	1.00	1.00	0.00	0.00	0.77	0.44	8.76	0.00	1054.4	156.2	240.3
30.75	9.43	2.41	35.0	0.70	24.5	0.77	0.44	0.00	1.00	1.00	0.00	0.00	0.77	0.44	8.82	0.00	1055.1	156.6	241.0
30.66	9.43	2.40	35.0	0.70	24.5	0.77	0.44	0.00	1.00	1.00	0.00	0.00	0.77	0.44	8.87	0.00	1055.7	157.0	241.8
30.57	9.43	2.40	35.0	0.70	24.5	0.76	0.44	0.00	1.00	1.00	0.00	0.00	0.76	0.44	8.93	0.00	1056.4	157.5	242.6
30.48	9.43	2.39	35.0	0.70	24.5	0.76	0.44	0.00	1.00	1.00	0.00	0.00	0.76	0.44	8.99	0.00	1057.0	157.9	243.3
30.39	9.43	2.39	35.0	0.70	24.5	0.76	0.43	0.00	1.00	1.00	0.00	0.00	0.76	0.43	9.04	0.00	1057.7	158.3	244.1
30.30	9.43	2.38	35.0	0.70	24.5	0.76	0.43	0.00	1.00	1.00	0.00	0.00	0.76	0.43	9.10	0.00	1058.3	158.8	244.8
30.21	9.43	2.37	35.0	0.70	24.5	0.76	0.43	0.00	1.00	1.00	0.00	0.00	0.76	0.43	9.15	0.00	1059.0	159.2	245.6
30.12	9.43	2.37	35.0	0.70	24.5	0.76	0.43	0.00	1.00	1.00	0.00	0.00	0.76	0.43	9.21	0.00	1059.6	159.6	246.4
30.03	9.43	2.36	35.0	0.70	24.5	0.75	0.43	0.00	1.00	1.00	0.00	0.00	0.75	0.43	9.27	0.00	1060.3	160.0	247.1
29.94	9.43	2.36	35.0	0.70	24.5	0.75	0.43	0.00	1.00	1.00	0.00	0.00	0.75	0.43	9.32	0.00	1060.9	160.4	247.9
29.85	9.43	2.35	35.0	0.70	24.5	0.75	0.43	0.00	1.00	1.00	0.00	0.00	0.75	0.43	9.38	0.00	1061.5	160.9	248.6
29.76	9.43	2.35	35.0	0.70	24.5	0.75	0.43	0.00	1.00	1.00	0.00	0.00	0.75	0.43	9.43	0.00	1062.2	161.3	249.4
29.67	9.43	2.34	35.0	0.70	24.5	0.75	0.43	0.00	1.00	1.00	0.00	0.00	0.75	0.43	9.49	0.00	1062.8	161.7	250.1
29.58	9.43	2.34	35.0	0.70	24.5	0.75	0.43	0.00	1.00	1.00	0.00	0.00	0.75	0.43	9.54	0.00	1063.4	162.1	250.9
29.49	9.43	2.33	35.0	0.70	24.5	0.74	0.42	0.00	1.00	1.00	0.00	0.00	0.74	0.42	9.60	0.00	1064.1	162.5	251.6
29.40	9.43	2.33	35.0	0.70	24.5	0.74	0.42	0.00	1.00	1.00	0.00	0.00	0.74	0.42	9.66	0.00	1064.7	162.9	252.3
29.31	9.43	2.32	35.0	0.70	24.5	0.74	0.42	0.00	1.00	1.00	0.00	0.00	0.74	0.42	9.71	0.00	1065.3	163.4	253.1
29.22	9.43	2.31	35.0	0.70	24.5	0.74	0.42	0.00	1.00	1.00	0.00	0.00	0.74	0.42	9.77	0.00	1066.0	163.8	253.8
29.13	9.43	2.31	35.0	0.70	24.5	0.74	0.42	0.00	1.00	1.00	0.00	0.00	0.74	0.42	9.82	0.00	1066.6	164.2	254.6
29.04	9.43	2.30	35.0	0.70	24.5	0.73	0.42	0.00	1.00	1.00	0.00	0.00	0.73	0.42	9.88	0.00	1067.2	164.6	255.3
28.95	9.43	2.30	35.0	0.70	24.5	0.73	0.42	0.00	1.00	1.00	0.00	0.00	0.73	0.42	9.93	0.00	1067.8	165.0	256.0
28.86	9.43	2.29	35.0	0.70	24.5	0.73	0.42	0.00	1.00	1.00	0.00	0.00	0.73	0.42	9.99	0.00	1068.5	165.4	256.8
28.77	9.43	2.29	35.0	0.70	24.5	0.73	0.42	0.00	1.00	1.00	0.00	0.00	0.73	0.42	10.05	0.00	1069.1	165.8	257.5
28.68	9.43	2.28	35.0	0.70	24.5	0.73	0.42	0.00	1.00	1.00	0.00	0.00	0.73	0.42	10.10	0.00	1069.7	166.2	258.2
28.59	9.43	2.28	35.0	0.70	24.5	0.73	0.41	0.00	1.00	1.00	0.00	0.00	0.73	0.41	10.16	0.00	1070.3	166.7	259.0
28.50	9.43	2.27	35.0	0.70	24.5	0.72	0.41	0.00	1.00	1.00	0.00	0.00	0.72	0.41	10.21	0.00	1070.9	167.1	259.7
28.41	9.43	2.27	35.0	0.70	24.5	0.72	0.41	0.00	1.00	1.00	0.00	0.00	0.72	0.41	10.27	0.00	1071.5	167.5	260.4
28.32	9.43	2.26	35.0	0.70	24.5	0.72	0.41	0.00	1.00	1.00	0.00	0.00	0.72	0.41	10.33	0.00	1072.2	167.9	261.1
28.23	9.43	2.25	35.0	0.70	24.5	0.72	0.41	0.00	1.00	1.00	0.00	0.00	0.72	0.41	10.38	0.00	1072.8	168.3	261.9
28.14	9.43	2.25	35.0	0.70	24.5	0.72	0.41	0.00	1.00	1.00	0.00	0.00	0.72	0.41	10.44	0.00	1073.4	168.7	262.6
28.05	9.43	2.24	35.0	0.70	24.5	0.72	0.41	0.00	1.00	1.00	0.00	0.00	0.72	0.41	10.49	0.00	1074.0	169.1	263.3
27.96	9.43	2.24	35.0	0.70	24.5	0.71	0.41	0.00	1.00	1.00	0.00	0.00	0.71	0.41	10.55	0.00	1074.6	169.5	264.0
27.87	9.43	2.23	35.0	0.70	24.5	0.71	0.41	0.00	1.00	1.00	0.00	0.00	0.71	0.41	10.60	0.00	1075.2	169.9	264.7
27.78	9.43	2.23	35.0	0.70	24.5	0.71	0.41	0.00	1.00	1.00	0.00	0.00	0.71	0.41	10.66	0.00	1075.8	170.3	265.4
27.69	9.43	2.22	35.0	0.70	24.5	0.71	0.41	0.00	1.00	1.00	0.00	0.00	0.71	0.41	10.72	0.00	1076.4	170.7	266.1
27.60	9.43	2.22	35.0	0.70	24.5	0.71	0.40	0.00	1.00	1.00	0.00	0.00	0.71	0.40	10.77	0.00	1077.0	171.1	266.8
27.51	9.43	2.21	35.0	0.70	24.5	0.71	0.40	0.00	1.00	1.00	0.00	0.00	0.71	0.40	10.83	0.00	1077.6	171.5	267.6
27.41	9.43	2.21	35.0	0.70	24.5	0.70	0.40	0.00	1.00	1.00	0.00	0.00	0.70	0.40	10.88	0.00	1078.2	171.9	268.3
27.32	9.43	2.20	35.0	0.70	24.5	0.70	0.40	0.00	1.00	1.00	0.00	0.00	0.70	0.40	10.94	0.00	1078.8	172.3	269.0
27.23	9.43	2.19	35.0	0.70	24.5	0.70	0.40	0.00	1.00	1.00	0.00	0.00	0.70	0.40	11.00	0.00	1079.4	172.7	269.7
27.14	9.43	2.19	35.0	0.70	24.5	0.70	0.40	0.00	1.00	1.00	0.00	0.00	0.70	0.40	11.05	0.00	1080.0	173.1	270.4
27.05	9.43	2.18	35.0	0.70	24.5	0.70	0.40	0.00	1.00	1.00	0.00	0.00	0.70	0.40	11.11	0.00	1080.6	173.5	271.1
26.96	9.43	2.18	32.0	0.70	22.4	0.63	0.36	0.50	1.00	1.00	0.50	0.50	1.13	0.86	11.16	0.00	1081.5	174.3	272.3
26.87	9.43	2.17	32.0	0.70	22.4	0.63	0.36	0.50	1.00	1.00	0.50	0.50	1.13	0.86	11.22	0.00	1082.5	175.0	273.6
26.78	9.43	2.16	32.0	0.70	22.4	0.62	0.36	0.50	1.00	1.00	0.50	0.50	1.12	0.86	11.27	0.00	1083.5	175.8	274.9
26.69	9.43	2.16	32.0	0.70	22.4	0.62	0.36	0.50	1.00	1.00	0.50	0.50	1.12	0.86	11.33	0.00	1084.4	176.6	276.1
26.60	9.43	2.15	32.0	0.70	22.4	0.62	0.35	0.50	1.00	1.00	0.50	0.50	1.12	0.85	11.39	0.00	1085.4	177.4	277.4
26.51	9.43	2.15	32.0	0.70	22.4	0.62	0.35	0.50	1.00	1.00	0.50	0.50	1.12	0.85	11.44	0.00	1086.3	178.2	278.6
26.42	9.43	2.14	32.0	0.70	22.4	0.62	0.35	0.50	1.00	1.00	0.50	0.50	1.12	0.85	11.50	0.00	1087.3	179.0	279.9
26.33	9.43	2.13	32.0	0.70	22.4	0.62	0.35	0.50	1.00	1.00	0.50	0.50	1.12	0.85	11.55	0.00	1088.2	179.7	281.1
26.24	9.43	2.13	32.0	0.70	22.4	0.61	0.35	0.50	1.00	1.00	0.50	0.50	1.11	0.85	11.61	0.00	1089.2	180.5	282.4
26.15	9.43	2.12	32.0	0.70	22.4	0.61	0.35	0.50	1.00	1.00	0.50	0.50	1.11	0.85	11.67	0.00	1090.1	181.3	283.6
26.06	9.43	2.11	32.0	0.70	22.4	0.61	0.35	0.50	1.00	1.00	0.50	0.50	1.11	0.85	11.72	0.00	1091.0	182.1	284.9
25.97	9.43	2.11	32.0	0.70	22.4	0.61	0.35	0.50	1.00	1.00	0.50	0.50	1.11	0.85	11.78	0.00	1092.0	182.8	286.1
25.88	9.43	2.10	32.0	0.70	22.4	0.61	0.35	0.50	1.00	1.00	0.50	0.50	1.11	0.85	11.83	0.00	1092.9	183.6	287.4
25.79	9.43	2.09	32.0	0.70	22.4	0.60	0.35	0.50	1.00	1.00	0.50	0.50	1.10	0.85	11.89	0.00	1093.9	184.4	288.6
25.70	9.43	2.09	32.0	0.70	22.4	0.60	0.34	0.50	1.00	1.00	0.50	0.50	1.10	0.84	11.94	0.00	1094.8	185.2	289.9
25.61	9.43	2.08	32.0	0.70	22.4	0.60	0.34	0.50	1.00	1.00	0.50	0.50	1.10	0.84	12.00	0.00	1095.7	185.9	291.1
25.52	9.43	2.08	32.0	0.70	22.4	0.60	0.34	0.50	1.00	1.00	0.50	0.50	1.10	0.84	12.06	0.00	1096.7	186.7	292.3
25.43	9.43	2.07	32.0	0.70	22.4	0.60	0.34	0.50	1.00	1.00	0.50	0.50	1.10	0.84	12.11	0.00	1097.6	187.5	293.6
25.34	9.43	2.06	32.0	0.70	22.4	0.60	0.34	0.50	1.00	1.00	0.50	0.50	1.10	0.84	12.17	0.00	1098.5	188.3	294.8

25.25	9.43	2.06	32.0	0.70	22.4	0.59	0.34	0.50	1.00	1.00	0.50	0.50	1.09	0.84	12.22	0.00	1099.5	189.0	296.0
25.16	9.43	2.05	32.0	0.70	22.4	0.59	0.34	0.50	1.00	1.00	0.50	0.50	1.09	0.84	12.28	0.00	1100.4	189.8	297.3
25.07	9.43	2.04	32.0	0.70	22.4	0.59	0.34	0.50	1.00	1.00	0.50	0.50	1.09	0.84	12.33	0.00	1101.3	190.6	298.5
24.98	9.43	2.04	32.0	0.70	22.4	0.59	0.34	0.50	1.00	1.00	0.50	0.50	1.09	0.84	12.39	0.00	1102.2	191.3	299.7
24.89	9.43	2.03	32.0	0.70	22.4	0.59	0.33	0.50	1.00	1.00	0.50	0.50	1.09	0.83	12.45	0.00	1103.2	192.1	301.0
24.80	9.43	2.02	32.0	0.70	22.4	0.58	0.33	0.50	1.00	1.00	0.50	0.50	1.08	0.83	12.50	0.00	1104.1	192.9	302.2
24.71	9.43	2.02	32.0	0.70	22.4	0.58	0.33	0.50	1.00	1.00	0.50	0.50	1.08	0.83	12.56	0.00	1105.0	193.6	303.4
24.62	9.43	2.01	32.0	0.70	22.4	0.58	0.33	0.50	1.00	1.00	0.50	0.50	1.08	0.83	12.61	0.00	1105.9	194.4	304.6
24.53	9.43	2.01	32.0	0.70	22.4	0.58	0.33	0.50	1.00	1.00	0.50	0.50	1.08	0.83	12.67	0.00	1106.8	195.1	305.8
24.44	9.43	2.00	32.0	0.70	22.4	0.58	0.33	0.50	1.00	1.00	0.50	0.50	1.08	0.83	12.73	0.00	1107.8	195.9	307.0
24.35	9.43	1.99	32.0	0.70	22.4	0.58	0.33	0.50	1.00	1.00	0.50	0.50	1.08	0.83	12.78	0.00	1108.7	196.7	308.3
24.26	9.43	1.99	32.0	0.70	22.4	0.57	0.33	0.50	1.00	1.00	0.50	0.50	1.07	0.83	12.84	0.00	1109.6	197.4	309.5
24.17	9.43	1.98	32.0	0.70	22.4	0.57	0.33	0.50	1.00	1.00	0.50	0.50	1.07	0.83	12.89	0.00	1110.5	198.2	310.7
24.08	9.43	1.97	32.0	0.70	22.4	0.57	0.33	0.50	1.00	1.00	0.50	0.50	1.07	0.83	12.95	0.00	1111.4	198.9	311.9
23.99	9.43	1.97	32.0	0.70	22.4	0.57	0.32	0.50	1.00	1.00	0.50	0.50	1.07	0.82	13.00	0.00	1112.3	199.7	313.1
23.90	9.43	1.96	32.0	0.70	22.4	0.57	0.32	0.50	1.00	1.00	0.50	0.50	1.07	0.82	13.06	0.00	1113.2	200.4	314.3
23.81	9.43	1.96	32.0	0.70	22.4	0.56	0.32	0.50	1.00	1.00	0.50	0.50	1.06	0.82	13.12	0.00	1114.1	201.2	315.5
23.72	9.43	1.95	32.0	0.70	22.4	0.56	0.32	0.50	1.00	1.00	0.50	0.50	1.06	0.82	13.17	0.00	1115.0	202.0	316.7
23.63	9.43	1.94	32.0	0.70	22.4	0.56	0.32	0.50	1.00	1.00	0.50	0.50	1.06	0.82	13.23	0.00	1115.9	202.7	317.9
23.54	9.43	1.94	32.0	0.70	22.4	0.56	0.32	0.50	1.00	1.00	0.50	0.50	1.06	0.82	13.28	0.00	1116.8	203.5	319.1
23.45	9.43	1.93	32.0	0.70	22.4	0.56	0.32	0.50	1.00	1.00	0.50	0.50	1.06	0.82	13.34	0.00	1117.7	204.2	320.3
23.36	9.43	1.92	32.0	0.70	22.4	0.55	0.32	0.50	1.00	1.00	0.50	0.50	1.05	0.82	13.40	0.00	1118.6	205.0	321.5
23.27	9.43	1.92	32.0	0.70	22.4	0.55	0.32	0.50	1.00	1.00	0.50	0.50	1.05	0.82	13.45	0.00	1119.5	205.7	322.7
23.18	9.43	1.91	32.0	0.70	22.4	0.55	0.32	0.50	1.00	1.00	0.50	0.50	1.05	0.82	13.51	0.00	1120.4	206.5	323.9
23.09	9.43	1.90	32.0	0.70	22.4	0.55	0.31	0.50	1.00	1.00	0.50	0.50	1.05	0.81	13.56	0.00	1121.3	207.2	325.1
23.00	9.43	1.90	32.0	0.70	22.4	0.55	0.31	0.50	1.00	1.00	0.50	0.50	1.05	0.81	13.62	0.00	1122.2	208.0	326.2
22.91	9.43	1.89	32.0	0.70	22.4	0.55	0.31	0.50	1.00	1.00	0.50	0.50	1.05	0.81	13.67	0.00	1123.1	208.7	327.4
22.82	9.43	1.89	32.0	0.70	22.4	0.54	0.31	0.50	1.00	1.00	0.50	0.50	1.04	0.81	13.73	0.00	1124.0	209.4	328.6
22.73	9.43	1.88	32.0	0.70	22.4	0.54	0.31	0.50	1.00	1.00	0.50	0.50	1.04	0.81	13.79	0.00	1124.9	210.2	329.8
22.64	9.43	1.87	32.0	0.70	22.4	0.54	0.31	0.50	1.00	1.00	0.50	0.50	1.04	0.81	13.84	0.00	1125.7	210.9	331.0
22.55	9.43	1.87	32.0	0.70	22.4	0.54	0.31	0.50	1.00	1.00	0.50	0.50	1.04	0.81	13.90	0.00	1126.6	211.7	332.1
22.45	9.43	1.86	32.0	0.70	22.4	0.54	0.31	0.50	1.00	1.00	0.50	0.50	1.04	0.81	13.95	0.00	1127.5	212.4	333.3
22.36	9.43	1.85	32.0	0.70	22.4	0.53	0.31	0.50	1.00	1.00	0.50	0.50	1.03	0.81	14.01	0.00	1128.4	213.2	334.5
22.27	9.43	1.85	32.0	0.70	22.4	0.53	0.30	0.50	1.00	1.00	0.50	0.50	1.03	0.80	14.07	0.00	1129.3	213.9	335.7
22.18	9.43	1.84	32.0	0.70	22.4	0.53	0.30	0.50	1.00	1.00	0.50	0.50	1.03	0.80	14.12	0.00	1130.1	214.6	336.8
22.09	9.43	1.83	32.0	0.70	22.4	0.53	0.30	0.50	1.00	1.00	0.50	0.50	1.03	0.80	14.18	0.00	1131.0	215.4	338.0
22.00	9.43	1.83	32.0	0.70	22.4	0.53	0.30	0.50	1.00	1.00	0.50	0.50	1.03	0.80	14.23	0.00	1131.9	216.1	339.2
21.91	9.43	1.82	32.0	0.70	22.4	0.53	0.30	0.00	1.00	1.00	0.00	0.00	0.53	0.30	14.29	0.00	1132.3	216.4	339.7
21.82	9.43	1.82	32.0	0.70	22.4	0.52	0.30	0.00	1.00	1.00	0.00	0.00	0.52	0.30	14.34	0.00	1132.8	216.7	340.2
21.73	9.43	1.81	32.0	0.70	22.4	0.52	0.30	0.00	1.00	1.00	0.00	0.00	0.52	0.30	14.40	0.00	1133.2	217.0	340.7
21.64	9.43	1.81	32.0	0.70	22.4	0.52	0.30	0.00	1.00	1.00	0.00	0.00	0.52	0.30	14.46	0.00	1133.7	217.4	341.3
21.55	9.43	1.80	32.0	0.70	22.4	0.52	0.30	0.00	1.00	1.00	0.00	0.00	0.52	0.30	14.51	0.00	1134.1	217.7	341.8
21.46	9.43	1.80	32.0	0.70	22.4	0.52	0.30	0.00	1.00	1.00	0.00	0.00	0.52	0.30	14.57	0.00	1134.5	218.0	342.3
21.37	9.43	1.79	32.0	0.70	22.4	0.52	0.30	0.00	1.00	1.00	0.00	0.00	0.52	0.30	14.62	0.00	1135.0	218.3	342.8
21.28	9.43	1.79	32.0	0.70	22.4	0.52	0.29	0.00	1.00	1.00	0.00	0.00	0.52	0.29	14.68	0.00	1135.4	218.6	343.3
21.19	9.43	1.78	32.0	0.70	22.4	0.51	0.29	0.00	1.00	1.00	0.00	0.00	0.51	0.29	14.73	0.00	1135.9	218.9	343.9
21.10	9.43	1.78	32.0	0.70	22.4	0.51	0.29	0.00	1.00	1.00	0.00	0.00	0.51	0.29	14.79	0.00	1136.3	219.2	344.4
21.01	9.43	1.77	32.0	0.70	22.4	0.51	0.29	0.00	1.00	1.00	0.00	0.00	0.51	0.29	14.85	0.00	1136.7	219.5	344.9
20.92	9.43	1.77	32.0	0.70	22.4	0.51	0.29	0.00	1.00	1.00	0.00	0.00	0.51	0.29	14.90	0.00	1137.2	219.8	345.4
20.83	9.43	1.76	32.0	0.70	22.4	0.51	0.29	0.00	1.00	1.00	0.00	0.00	0.51	0.29	14.96	0.00	1137.6	220.1	345.9
20.74	9.43	1.76	32.0	0.70	22.4	0.51	0.29	0.00	1.00	1.00	0.00	0.00	0.51	0.29	15.01	0.00	1138.0	220.4	346.4
20.65	9.43	1.75	32.0	0.70	22.4	0.51	0.29	0.00	1.00	1.00	0.00	0.00	0.51	0.29	15.07	0.00	1138.5	220.7	346.9
20.56	9.43	1.75	32.0	0.70	22.4	0.50	0.29	0.00	1.00	1.00	0.00	0.00	0.50	0.29	15.13	0.00	1138.9	221.0	347.4
20.47	9.43	1.74	32.0	0.70	22.4	0.50	0.29	0.00	1.00	1.00	0.00	0.00	0.50	0.29	15.18	0.00	1139.3	221.3	347.9
20.38	9.43	1.74	32.0	0.70	22.4	0.50	0.29	0.00	1.00	1.00	0.00	0.00	0.50	0.29	15.24	0.00	1139.7	221.6	348.4
20.29	9.43	1.73	32.0	0.70	22.4	0.50	0.29	0.00	1.00	1.00	0.00	0.00	0.50	0.29	15.29	0.00	1140.2	221.9	348.9
20.20	9.43	1.73	32.0	0.70	22.4	0.50	0.28	0.00	1.00	1.00	0.00	0.00	0.50	0.28	15.35	0.00	1140.6	222.2	349.4
20.11	9.43	1.72	32.0	0.70	22.4	0.50	0.28	0.00	1.00	1.00	0.00	0.00	0.50	0.28	15.40	0.00	1141.0	222.5	349.9
20.02	9.43	1.72	32.0	0.70	22.4	0.49	0.28	0.00	1.00	1.00	0.00	0.00	0.49	0.28	15.46	0.00	1141.4	222.8	350.4
19.93	9.43	1.71	32.0	0.70	22.4	0.49	0.28	0.00	1.00	1.00	0.00	0.00	0.49	0.28	15.52	0.00	1141.8	223.1	350.9
19.84	9.43	1.71	32.0	0.70	22.4	0.49	0.28	0.00	1.00	1.00	0.00	0.00	0.49	0.28	15.57	0.00	1142.3	223.4	351.4
19.75	9.43	1.70	32.0	0.70	22.4	0.49	0.28	0.00	1.00	1.00	0.00	0.00	0.49	0.28	15.63	0.00	1142.7	223.7	351.9
19.66	9.43	1.69	32.0	0.70	22.4	0.49	0.28	0.00	1.00	1.00	0.00	0.00	0.49	0.28	15.68	0.00	1143.1	224.0	352.4
19.57	9.43	1.69	32.0	0.70	22.4	0.49	0.28	0.00	1.00	1.00	0.00	0.00	0.49	0.28	15.74	0.00	1143.5	224.3	352.9
19.48	9.43	1.69	32.0	0.70	22.4	-0.49	0.28	0.00	1.00	1.00	0.00	0.00	-0.49	0.28	15.80	-0.41	1143.1	224.6	352.7
19.39	9.43	1.68	32.0	0.70	22.4	-0.48	0.28	0.00	1.00	1.00	0.00	0.00	-0.48	0.28	15.85	-0.83	1142.7	224.8	352.6
19.30	9.43	1.68	32.0	0.70	22.4	-0.48	0.28	0.00	1.00	1.00	0.00	0.00	-0.48	0.28	15.91	-1.24	1142.3	225.1	352.5
19.21	9.43	1.67	32.0	0.70	22.4	-0.48	0.28	0.00	1.00	1.00	0.00	0.00	-0.48	0.28	15.96	-1.65	1141.9	225.4	352.3
19.12	9.43	1.67	32.0	0.70	22.4	-0.48	0.27	0.00	1.00	1.00	0.00	0.00	-0.48	0.27	16.02	-2.05	1141.5	225.7	352.2
19.03	9.43	1.66	32.0	0.70	22.4	-0.48	0.27	0.00	1.00	1.00	0.00	0.00	-0.48	0.27	16.07	-2.46	1141.1	226.0	352.1
18.94	9.43	1.66	32.0	0.70	22.4	-0.48	0.27	0.00	1.00	1.00	0.00	0.00	-0.48	0.27	16.13	-2.87	1140.6	226.3	352.0
18.85	9.43	1.65	32.0	0.70	22.4	-0.48	0.27	0.00	1.00	1.00	0.00	0.00	-0.48	0.27	16.19	-3.27	1140.2	226.6	351.8
18.76	9.43	1.65	32.0	0.70	22.4	-0.48	0.27	0.00	1.00	1.00	0.00	0.00	-0.48	0.27	16.24	-3.68	1139.8	226.9	351.7
18.67	9.43	1.64	32.0	0.70	22.4	-0.47	0.27	0.00	1.00	1.00	0.00	0.00	-0.47	0.27	16.30	-4.08	1139.4	227.2	351.6
18.58	9.43	1.64	32.0	0.70	22.4	-0.47	0.27	0.00	1.00	1.00	0.00	0.00	-0.47	0.27	16.35	-4.48	1139.0	227.4	351.4
18.49	9.43	1.63	32.0	0.70	22.4	-0.47	0.27	0.00	1.00	1.00	0.00	0.00	-0.47	0.27	16.41	-4.88	1138.6	227.7	351.3
18.40	9.43	1.63	32.0	0.70	22.4	-0.47	0.27	0.00	1.00	1.00	0.00	0.00	-0.47	0.27	16.47	-5.28	1138.2	228.0	351.2
18.31	9.43	1.62	32.0	0.70	22.4	-0.47	0.27	0.00	1.00	1.00	0.00	0.00	-0.47	0.27	16.52	-5.68	1137.8	228.3	351.1
18.22	9.43	1.62	32.0	0.70	22.4	-0.47	0.27	0.00	1.00	1.00	0.00	0.00	-0.47	0.27	16.58	-6.08	1137.4	228.6	350.9
18.13	9.43	1.61	32.0	0.70	22.4	-0.47	0.27	0.00	1.00	1.00	0.00	0.00	-0.47	0.27	16.63	-6.47	1137.0	228.9	350.8
18.04	9.43	1.61	32.0	0.70	22.4	-0.46	0.27	0.00	1.00	1.00	0.00	0.00	-0.46	0.27	16.69	-6.87	1136.6	229.1	350.7
17.95	9.43	1.60	32.0	0.70	22.4	-0.46	0.26	0.00	1.00	1.00	0.00	0.00	-0.46	0.26	16.74	-7.26	1136.3	229.4	350.5
17.86	9.43	1.60	32.0	0.70	22.4	-0.46	0.26	0.00	1.00	1.00	0.00	0.00	-0.46	0.26	16.80	-7.65	1135.9	229.7	350.4
17.77	9.43	1.59	32.0	0.70	22.4	-0.46	0.26	0.00	1.00	1.00	0.00	0.00	-0.46	0.26	16.86	-8.04	1135.5	230.0	350.3
17.68	9.43	1.59	32.0	0.70	22.4	-0.46	0.26	0.00	1.00	1.00	0.00	0.00	-0.46	0.26	16.91	-8.43	1135.1	230.3	350.2
17.59	9.43	1.59	32.0	0.70	22.4	-0.46	0.26	0.00	1.00	1.00	0.00	0.00	-0.46	0.26	16.97	-8.82	1134.7	230.5	350.0
17.49	9.43	1.58	32.0	0.70	22.4	-0.46	0.26	0.00	1.00	1.00	0.00	0.00	-0.46	0.26	17.02	-9.21	1134.3	230.8	349.9
17.40	9.43	1.58	32.0	0.70	22.4	-0.45	0.26	0.00	1.00	1.00	0.00	0.00	-0.45	0.26	17.08	-9.60	1133.9	231.1	349.8
17.31	9.43	1.57	32.0	0.70	22.4	-0.45	0.26	0.00	1.00	1.00	0.00	0.00	-0.45	0.26	17.13	-9.98	1133.5	231.4	349.7
17.22	9.43	1.57	32.0	0.70	22.4	-0.45	0.26	0.00	1.00	1.00	0.00	0.00	-0.45	0.26	17.19	-10.37	1133.1	231.6	349.5
17.13	9.43	1.56	32.0	0.70	22.4	-0.45	0.26	0.00	1.00	1.00	0.00	0.00	-0.45	0.26	17.25	-10.75	1132.8	231.9	349.4
17.04	9.43	1.56	32.0	0.70	22.4	-0.45	0.26	0.00	1.00	1.00	0.00	0.00	-0.45	0.26	17.30	-11.13	1132.4	232.2	349.3
16.95	9.43	1.55	32.0	0.70	22.4	-0.45	0.26	0.00	1.00	1.00	0.00	0.00	-0.45	0.26	17.36	-11.51	1132.0	232.5	349.2
16.86	9.43	1.55	32.0	0.70	22.4	-0.45	0.26	0.00	1.00	1.00	0.00	0.00	-0.45	0.26	17.41	-11.89	1131.6	232.7	349.1
16.77	9.43	1.54	32.0	0.70	22.4	-0.45	0.25	0.00	1.00	1.00	0.00	0.00	-0.45	0.25	17.47	-12.27	1131.2	233.0	348.9
16.68	9.43	1.54	32.0	0.70	22.4	-0.44	0.25	0.00	1.00	1.00	0.00	0.00	-0.44	0.25	17.53	-12.65	1130.9	233.3	348.8
16.59	9.43	1.53	32.0	0.70	22.4	-0.44	0.25	0.00	1.00	1.00	0.00	0.00	-0.44	0.25	17.58	-13.02	1130.5	233.5	348.7
16.50	9.43	1.53	32.0	0.70	22.4	-0.44	0.25	0.00	1.00	1.00	0.00	0.00	-0.44	0.25	17.64	-13.40	1130.1	233.8	348.6
16.41	9.43	1.52	32.0	0.70	22.4	-0.44	0.25	0.00	1.00	1.00	0.00	0.00	-0.44	0.25	17.69	-13.77	1129.7	234.1	348.5
16.32	9.43	1.52	32.0	0.70	22.4	-0.44	0.25	0.00	1.00	1.00	0.00	0.00	-0.44	0.25	17.75	-14.14	1129.4	234.4	348.3
16.23	9.43	1.51	32.0	0.70	22.4	-0.44	0.25	0.00	1.00	1.00	0.00	0.00	-0.44	0.25	17.80	-14.52	1129.0	234.6	348.2
16.14	9.43	1.51	32.0	0.70	22.4	-0.44	0.25	0.00	1.00	1.00	0.00	0.00	-0.44	0.25	17.86	-14.89	1128.6	234.9	348.1
16.05	9.43	1.50	32.0	0.70	22.4	-0.43	0.25	0.00	1.00	1.00	0.00	0.00	-0.43	0.25	17.92	-15.25	1128.3	235.2	348.0
15.96	9.43	1.50	32.0	0.70	22.4	-0.43	0.25	0.00	1.00	1.00	0.00	0.00	-0.43	0.25	17.97	-15.62	1127.9	235.4	347.9
15.87	9.43	1.50	32.0	0.70	22.4	-0.43	0.25	0.00	1.00	1.00	0.00	0.00	-0.43	0.25	18.03	-15.99	1127.5	235.7	347.7
15.78	9.43	1.49	32.0	0.70	22.4	-0.43	0.25	0.00	1.00	1.00	0.00	0.00	-0.43	0.25	18.08	-16.35	1127.2	236.0	347.6
15.69	9.43	1.49	32.0	0.70	22.4	-0.43	0.24	0.00	1.00	1.00	0.00	0.00	-0.43	0.24	18.14	-16.72	1126.8	236.2	347.5
15.60	9.43	1.48	32.0	0.70	22.4	-0.43	0.24	0.00	1.00	1.00	0.00	0.00	-0.43	0.24	18.20	-17.08	1126.4	236.5	347.4
15.51	9.43	1.48	32.0	0.70	22.4	-0.43	0.24	0.00	1.00	1.00	0.00	0.00	-0.43	0.24	18.25	-17.44	1126.1	236.7	347.3
15.42	9.43	1.47	32.0	0.70	22.4	-0.42	0.24	0.00	1.00	1.00	0.00	0.00	-0.42	0.24	18.31	-17.81	1125.7	237.0	347.2
15.33	9.43	1.47	32.0	0.70	22.4	-0.42	0.24	0.00	1.00	1.00	0.00	0.00	-0.42	0.24	18.36	-18.16	1125.3	237.3	347.0
15.24	9.43	1.46	32.0	0.70	22.4	-0.42	0.24	0.00	1.00	1.00	0.00	0.00	-0.42	0.24	18.42	-18.52	1125.0	237.5	346.9
15.15	9.43	1.46	32.0	0.70	22.4	-0.42	0.24	0.00	1.00	1.00	0.00	0.00	-0.42	0.24	18.47	-18.88	1124.6	237.8	346.8
15.06	9.43	1.45	32.0	0.70	22.4	-0.42	0.24	0.00	1.00	1.00	0.00	0.00	-0.42	0.24	18.53	-19.24	1124.3	238.0	346.7
14.97	9.43	1.45	32.0	0.70	22.4	-0.42	0.24	0.00	1.00	1.00	0.00	0.00	-0.42	0.24	18.59	-19.59	1123.9	238.3	346.6
14.88	9.43	1.44	32.0	0.70	22.4	-0.42	0.24	0.00	1.00	1.00	0.00	0.00	-0.42	0.24	18.64	-19.95	1123.6	238.6	346.5
14.79	9.43	1.44	32.0	0.70	22.4	-0.42	0.24	0.00	1.00	1.00	0.00	0.00	-0.42	0.24	18.70	-20.30	1123.2	238.8	346.4

14.70	9.43	1.43	32.0	0.70	22.4	-0.41	0.24	0.00	1.00	1.00	0.00	0.00	-0.41	0.24	18.75	-20.65	1122.9	239.1	346.2
14.61	9.43	1.43	32.0	0.70	22.4	-0.41	0.24	0.00	1.00	1.00	0.00	0.00	-0.41	0.24	18.81	-21.00	1122.5	239.3	346.1
14.52	9.43	1.42	32.0	0.70	22.4	-0.41	0.23	0.00	1.00	1.00	0.00	0.00	-0.41	0.23	18.86	-21.35	1122.2	239.6	346.0
14.43	9.43	1.42	32.0	0.70	22.4	-0.41	0.23	0.00	1.00	1.00	0.00	0.00	-0.41	0.23	18.92	-21.70	1121.8	239.8	345.9
14.34	9.43	1.41	32.0	0.70	22.4	-0.41	0.23	0.00	1.00	1.00	0.00	0.00	-0.41	0.23	18.98	-22.04	1121.5	240.1	345.8
14.25	9.43	1.41	32.0	0.70	22.4	-0.41	0.23	0.00	1.00	1.00	0.00	0.00	-0.41	0.23	19.03	-22.39	1121.1	240.4	345.7
14.16	9.43	1.41	32.0	0.70	22.4	-0.41	0.23	0.00	1.00	1.00	0.00	0.00	-0.41	0.23	19.09	-22.74	1120.8	240.6	345.6
14.07	9.43	1.40	32.0	0.70	22.4	-0.40	0.23	0.00	1.00	1.00	0.00	0.00	-0.40	0.23	19.14	-23.08	1120.4	240.9	345.5
13.98	9.43	1.40	32.0	0.70	22.4	-0.40	0.23	0.00	1.00	1.00	0.00	0.00	-0.40	0.23	19.20	-23.42	1120.1	241.1	345.4
13.89	9.43	1.39	32.0	0.70	22.4	-0.40	0.23	0.00	1.00	1.00	0.00	0.00	-0.40	0.23	19.26	-23.76	1119.8	241.4	345.2
13.80	9.43	1.39	32.0	0.70	22.4	-0.40	0.23	0.00	1.00	1.00	0.00	0.00	-0.40	0.23	19.31	-24.10	1119.4	241.6	345.1
13.71	9.43	1.38	32.0	0.70	22.4	-0.40	0.23	0.00	1.00	1.00	0.00	0.00	-0.40	0.23	19.37	-24.44	1119.1	241.9	345.0
13.62	9.43	1.38	32.0	0.70	22.4	-0.40	0.23	0.00	1.00	1.00	0.00	0.00	-0.40	0.23	19.42	-24.78	1118.7	242.1	344.9
13.53	9.43	1.37	32.0	0.70	22.4	-0.40	0.23	0.00	1.00	1.00	0.00	0.00	-0.40	0.23	19.48	-25.12	1118.4	242.4	344.8
13.44	9.43	1.37	32.0	0.70	22.4	-0.39	0.23	0.00	1.00	1.00	0.00	0.00	-0.39	0.23	19.53	-25.45	1118.1	242.6	344.7
13.35	9.43	1.36	32.0	0.70	22.4	-0.39	0.22	0.00	1.00	1.00	0.00	0.00	-0.39	0.22	19.59	-25.78	1117.7	242.9	344.6
13.26	9.43	1.36	32.0	0.70	22.4	-0.39	0.22	0.00	1.00	1.00	0.00	0.00	-0.39	0.22	19.65	-26.12	1117.4	243.1	344.5
13.17	9.43	1.35	32.0	0.70	22.4	-0.39	0.22	0.00	1.00	1.00	0.00	0.00	-0.39	0.22	19.70	-26.45	1117.1	243.3	344.4
13.08	9.43	1.35	32.0	0.70	22.4	-0.39	0.22	0.00	1.00	1.00	0.00	0.00	-0.39	0.22	19.76	-26.78	1116.7	243.6	344.3
12.99	9.43	1.34	32.0	0.70	22.4	-0.39	0.22	0.00	1.00	1.00	0.00	0.00	-0.39	0.22	19.81	-27.11	1116.4	243.8	344.2
12.90	9.43	1.34	32.0	0.70	22.4	-0.39	0.22	0.00	1.00	1.00	0.00	0.00	-0.39	0.22	19.87	-27.44	1116.1	244.1	344.1
12.81	9.43	1.33	32.0	0.70	22.4	-0.38	0.22	0.00	1.00	1.00	0.00	0.00	-0.38	0.22	19.93	-27.76	1115.7	244.3	344.0
12.72	9.43	1.33	32.0	0.70	22.4	-0.38	0.22	0.00	1.00	1.00	0.00	0.00	-0.38	0.22	19.98	-28.09	1115.4	244.6	343.8
12.63	9.43	1.32	32.0	0.70	22.4	-0.38	0.22	0.00	1.00	1.00	0.00	0.00	-0.38	0.22	20.04	-28.42	1115.1	244.8	343.7
12.54	9.43	1.32	32.0	0.70	22.4	-0.38	0.22	0.00	1.00	1.00	0.00	0.00	-0.38	0.22	20.09	-28.74	1114.8	245.0	343.6
12.44	9.43	1.32	32.0	0.70	22.4	-0.38	0.22	0.00	1.00	1.00	0.00	0.00	-0.38	0.22	20.15	-29.06	1114.5	245.3	343.5
12.35	9.43	1.31	32.0	0.70	22.4	-0.38	0.22	0.00	1.00	1.00	0.00	0.00	-0.38	0.22	20.20	-29.38	1114.1	245.5	343.4
12.26	9.43	1.31	32.0	0.70	22.4	-0.38	0.22	0.00	1.00	1.00	0.00	0.00	-0.38	0.22	20.26	-29.70	1113.8	245.8	343.3
12.17	9.43	1.30	32.0	0.70	22.4	-0.38	0.21	0.00	1.00	1.00	0.00	0.00	-0.38	0.21	20.32	-30.02	1113.5	246.0	343.2
12.08	9.43	1.30	32.0	0.70	22.4	-0.37	0.21	0.00	1.00	1.00	0.00	0.00	-0.37	0.21	20.37	-30.34	1113.2	246.2	343.1
11.99	9.43	1.29	0.0	0.70	0.0	0.00	0.00	0.50	1.00	1.00	-0.50	0.50	-0.50	0.50	20.43	-30.77	1112.7	246.7	343.1
11.90	9.43	1.28	0.0	0.70	0.0	0.00	0.00	0.50	1.00	1.00	-0.50	0.50	-0.50	0.50	20.48	-31.19	1112.3	247.2	343.1
11.81	9.43	1.26	0.0	0.70	0.0	0.00	0.00	0.50	1.00	1.00	-0.50	0.50	-0.50	0.50	20.54	-31.62	1111.9	247.7	343.1
11.72	9.43	1.25	0.0	0.70	0.0	0.00	0.00	0.50	1.00	1.00	-0.50	0.50	-0.50	0.50	20.60	-32.04	1111.5	248.2	343.1
11.63	9.43	1.24	0.0	0.70	0.0	0.00	0.00	0.50	1.00	1.00	-0.50	0.50	-0.50	0.50	20.65	-32.47	1111.0	248.6	343.1
11.54	9.43	1.23	0.0	0.70	0.0	0.00	0.00	0.50	1.00	1.00	-0.50	0.50	-0.50	0.50	20.71	-32.89	1110.6	249.1	343.1
11.45	9.43	1.22	0.0	0.70	0.0	0.00	0.00	0.50	1.00	1.00	-0.50	0.50	-0.50	0.50	20.76	-33.32	1110.2	249.6	343.1
11.36	9.43	1.21	0.0	0.70	0.0	0.00	0.00	0.50	1.00	1.00	-0.50	0.50	-0.50	0.50	20.82	-33.74	1109.8	250.1	343.1
11.27	9.43	1.20	0.0	0.70	0.0	0.00	0.00	0.50	1.00	1.00	-0.50	0.50	-0.50	0.50	20.87	-34.17	1109.3	250.6	343.1
11.18	9.43	1.19	0.0	0.70	0.0	0.00	0.00	0.50	1.00	1.00	-0.50	0.50	-0.50	0.50	20.93	-34.59	1108.9	251.0	343.1
11.09	9.43	1.18	0.0	0.70	0.0	0.00	0.00	0.50	1.00	1.00	-0.50	0.50	-0.50	0.50	20.99	-35.02	1108.5	251.5	343.1
11.00	9.43	1.17	0.0	0.70	0.0	0.00	0.00	0.50	1.00	1.00	-0.50	0.50	-0.50	0.50	21.04	-35.44	1108.1	252.0	343.1
10.91	9.43	1.16	0.0	0.70	0.0	0.00	0.00	0.50	1.00	1.00	-0.50	0.50	-0.50	0.50	21.10	-35.86	1107.6	252.5	343.1
10.82	9.43	1.15	0.0	0.70	0.0	0.00	0.00	0.50	1.00	1.00	-0.50	0.50	-0.50	0.50	21.15	-36.29	1107.2	253.0	343.1
10.73	9.43	1.14	0.0	0.70	0.0	0.00	0.00	0.50	1.00	1.00	-0.50	0.50	-0.50	0.50	21.21	-36.71	1106.8	253.4	343.1
10.64	9.43	1.13	0.0	0.70	0.0	0.00	0.00	0.50	1.00	1.00	-0.50	0.50	-0.50	0.50	21.26	-37.14	1106.4	253.9	343.1
10.55	9.43	1.12	0.0	0.70	0.0	0.00	0.00	0.50	1.00	1.00	-0.50	0.50	-0.50	0.50	21.32	-37.56	1105.9	254.4	343.1
10.46	9.43	1.11	0.0	0.70	0.0	0.00	0.00	0.50	1.00	1.00	-0.50	0.50	-0.50	0.50	21.38	-37.99	1105.5	254.9	343.1
10.37	9.43	1.10	0.0	0.70	0.0	0.00	0.00	0.50	1.00	1.00	-0.50	0.50	-0.50	0.50	21.43	-38.41	1105.1	255.4	343.1
10.28	9.43	1.09	0.0	0.70	0.0	0.00	0.00	0.50	1.00	1.00	-0.50	0.50	-0.50	0.50	21.49	-38.84	1104.7	255.9	343.1
10.19	9.43	1.07	0.0	0.70	0.0	0.00	0.00	0.50	1.00	1.00	-0.50	0.50	-0.50	0.50	21.54	-39.26	1104.2	256.3	343.1
10.10	9.43	1.06	0.0	0.70	0.0	0.00	0.00	0.50	1.00	1.00	-0.50	0.50	-0.50	0.50	21.60	-39.69	1103.8	256.8	343.1
10.01	9.43	1.05	0.0	0.70	0.0	0.00	0.00	0.50	1.00	1.00	-0.50	0.50	-0.50	0.50	21.66	-40.11	1103.4	257.3	343.1
9.92	9.43	1.04	0.0	0.70	0.0	0.00	0.00	0.50	1.00	1.00	-0.50	0.50	-0.50	0.50	21.75	-40.54	1103.0	257.8	343.1
9.83	9.43	1.03	0.0	0.70	0.0	0.00	0.00	0.50	1.00	1.00	-0.50	0.50	-0.50	0.50	21.85	-40.96	1102.5	258.3	343.1
9.74	9.43	1.02	0.0	0.70	0.0	0.00	0.00	0.50	1.00	1.00	-0.50	0.50	-0.50	0.50	21.94	-41.39	1102.1	258.9	343.1
9.65	9.43	1.01	0.0	0.70	0.0	0.00	0.00	0.50	1.00	1.00	-0.50	0.50	-0.50	0.50	22.04	-41.81	1101.7	259.4	343.1
9.56	9.43	1.00	0.0	0.70	0.0	0.00	0.00	0.50	1.00	1.00	-0.50	0.50	-0.50	0.50	22.13	-42.24	1101.3	259.9	343.1
9.47	9.43	0.99	0.0	0.70	0.0	0.00	0.00	0.50	1.00	1.00	-0.50	0.50	-0.50	0.50	22.23	-42.66	1100.8	260.4	343.1
9.38	9.43	0.98	0.0	0.70	0.0	0.00	0.00	0.50	1.00	1.00	-0.50	0.50	-0.50	0.50	22.32	-43.09	1100.4	260.9	343.1
9.29	9.43	0.97	0.0	0.70	0.0	0.00	0.00	0.50	1.00	1.00	-0.50	0.50	-0.50	0.50	22.42	-43.51	1100.0	261.5	343.1
9.20	9.43	0.96	0.0	0.70	0.0	0.00	0.00	0.50	1.00	1.00	-0.50	0.50	-0.50	0.50	22.52	-43.94	1099.6	262.0	343.1
9.11	9.43	0.95	0.0	0.70	0.0	0.00	0.00	0.50	1.00	1.00	-0.50	0.50	-0.50	0.50	22.61	-44.36	1099.2	262.5	343.1
9.02	9.43	0.94	0.0	0.70	0.0	0.00	0.00	0.50	1.00	1.00	-0.50	0.50	-0.50	0.50	22.71	-44.79	1098.7	263.0	343.1
8.93	9.43	0.93	0.0	0.70	0.0	0.00	0.00	0.50	1.00	1.00	-0.50	0.50	-0.50	0.50	22.80	-45.21	1098.3	263.5	343.1
8.84	9.43	0.92	0.0	0.70	0.0	0.00	0.00	0.50	1.00	1.00	-0.50	0.50	-0.50	0.50	22.90	-45.64	1097.9	264.1	343.1
8.75	9.43	0.91	0.0	0.70	0.0	0.00	0.00	0.50	1.00	1.00	-0.50	0.50	-0.50	0.50	22.99	-46.06	1097.5	264.6	343.1
8.66	9.43	0.90	0.0	0.70	0.0	0.00	0.00	0.50	1.00	1.00	-0.50	0.50	-0.50	0.50	23.09	-46.49	1097.0	265.1	343.1
8.57	9.43	0.88	0.0	0.70	0.0	0.00	0.00	0.50	1.00	1.00	-0.50	0.50	-0.50	0.50	23.19	-46.91	1096.6	265.6	343.1
8.48	9.43	0.87	0.0	0.70	0.0	0.00	0.00	0.50	1.00	1.00	-0.50	0.50	-0.50	0.50	23.28	-47.34	1096.2	266.1	343.1
8.39	9.43	0.86	0.0	0.70	0.0	0.00	0.00	0.50	1.00	1.00	-0.50	0.50	-0.50	0.50	23.38	-47.76	1095.8	266.7	343.1
8.30	9.43	0.85	0.0	0.70	0.0	0.00	0.00	0.50	1.00	1.00	-0.50	0.50	-0.50	0.50	23.47	-48.19	1095.3	267.2	343.1
8.21	9.43	0.84	0.0	0.70	0.0	0.00	0.00	0.50	1.00	1.00	-0.50	0.50	-0.50	0.50	23.57	-48.61	1094.9	267.7	343.1
8.12	9.43	0.83	0.0	0.70	0.0	0.00	0.00	0.50	1.00	1.00	-0.50	0.50	-0.50	0.50	23.66	-49.04	1094.5	268.2	343.1
8.03	9.43	0.82	0.0	0.70	0.0	0.00	0.00	0.50	1.00	1.00	-0.50	0.50	-0.50	0.50	23.76	-49.46	1094.1	268.7	343.1
7.94	9.43	0.81	0.0	0.70	0.0	0.00	0.00	0.50	1.00	1.00	-0.50	0.50	-0.50	0.50	23.85	-49.89	1093.6	269.3	343.1
7.85	9.43	0.80	0.0	0.70	0.0	0.00	0.00	0.50	1.00	1.00	-0.50	0.50	-0.50	0.50	23.95	-50.31	1093.2	269.8	343.1
7.76	9.43	0.79	0.0	0.70	0.0	0.00	0.00	0.50	1.00	1.00	-0.50	0.50	-0.50	0.50	24.05	-50.74	1092.8	270.3	343.1
7.67	9.43	0.78	0.0	0.70	0.0	0.00	0.00	0.50	1.00	1.00	-0.50	0.50	-0.50	0.50	24.14	-51.16	1092.4	270.8	343.1
7.58	9.43	0.77	0.0	0.70	0.0	0.00	0.00	0.50	1.00	1.00	-0.50	0.50	-0.50	0.50	24.24	-51.59	1091.9	271.3	343.1
7.48	9.43	0.76	0.0	0.70	0.0	0.00	0.00	0.50	1.00	1.00	-0.50	0.50	-0.50	0.50	24.33	-52.01	1091.5	271.9	343.1
7.39	9.43	0.75	0.0	0.70	0.0	0.00	0.00	0.50	1.00	1.00	-0.50	0.50	-0.50	0.50	24.43	-52.44	1091.1	272.4	343.1
7.30	9.43	0.74	0.0	0.70	0.0	0.00	0.00	0.50	1.00	1.00	-0.50	0.50	-0.50	0.50	24.52	-52.86	1090.7	272.9	343.1
7.21	9.43	0.73	0.0	0.70	0.0	0.00	0.00	0.50	1.00	1.00	-0.50	0.50	-0.50	0.50	24.62	-53.29	1090.2	273.4	343.1
7.12	9.43	0.72	0.0	0.70	0.0	0.00	0.00	0.50	1.00	1.00	-0.50	0.50	-0.50	0.50	24.71	-53.71	1089.8	274.0	343.1
7.03	9.43	0.71	0.0	0.70	0.0	0.00	0.00	0.50	1.00	1.00	-0.50	0.50	-0.50	0.50	24.81	-54.14	1089.4	274.5	343.1
6.94	9.43	0.69	0.0	0.70	0.0	0.00	0.00	0.50	1.00	1.00	-0.50	0.50	-0.50	0.50	24.91	-54.56	1089.0	275.0	343.1
6.85	9.43	0.68	0.0	0.70	0.0	0.00	0.00	0.50	1.00	1.00	-0.50	0.50	-0.50	0.50	25.00	-54.99	1088.5	275.5	343.1
6.76	9.43	0.67	0.0	0.70	0.0	0.00	0.00	0.50	1.00	1.00	-0.50	0.50	-0.50	0.50	25.10	-55.41	1088.1	276.0	343.1
6.67	9.43	0.66	0.0	0.70	0.0	0.00	0.00	0.50	1.00	1.00	-0.50	0.50	-0.50	0.50	25.19	-55.84	1087.7	276.6	343.1
6.58	9.43	0.65	0.0	0.70	0.0	0.00	0.00	0.50	1.00	1.00	-0.50	0.50	-0.50	0.50	25.29	-56.26	1087.3	277.1	343.1
6.49	9.43	0.64	0.0	0.70	0.0	0.00	0.00	0.50	1.00	1.00	-0.50	0.50	-0.50	0.50	25.38	-56.69	1086.8	277.6	343.1
6.40	9.43	0.63	0.0	0.70	0.0	0.00	0.00	0.50	1.00	1.00	-0.50	0.50	-0.50	0.50	25.48	-57.11	1086.4	278.1	343.1
6.31	9.43	0.62	0.0	0.70	0.0	0.00	0.00	0.50	1.00	1.00	-0.50	0.50	-0.50	0.50	25.57	-57.54	1086.0	278.6	343.1
6.22	9.43	0.61	0.0	0.70	0.0	0.00	0.00	0.50	1.00	1.00	-0.50	0.50	-0.50	0.50	25.67	-57.96	1085.6	279.2	343.1
6.13	9.43	0.60	0.0	0.70	0.0	0.00	0.00	0.50	1.00	1.00	-0.50	0.50	-0.50	0.50	25.77	-58.39	1085.1	279.7	343.1
6.04	9.43	0.59	0.0	0.70	0.0	0.00	0.00	0.50	1.00	1.00	-0.50	0.50	-0.50	0.50	25.86	-58.81	1084.7	280.2	343.1
5.95	9.43	0.58	0.0	0.70	0.0	0.00	0.00	0.50	1.00	1.00	-0.50	0.50	-0.50	0.50	25.96	-59.24	1084.3	280.7	343.1
5.86	9.43	0.57	0.0	0.70	0.0	0.00	0.00	0.50	1.00	1.00	-0.50	0.50	-0.50	0.50	26.05	-59.66	1083.9	281.2	343.1
5.77	9.43	0.56	0.0	0.70	0.0	0.00	0.00	0.50	1.00	1.00	-0.50	0.50	-0.50	0.50	26.15	-60.09	1083.4	281.8	343.1
5.68	9.43	0.55	0.0	0.70	0.0	0.00	0.00	0.50	1.00	1.00	-0.50	0.50	-0.50	0.50	26.24	-60.51	1083.0	282.3	343.1
5.59	9.43	0.54	0.0	0.70	0.0	0.00	0.00	0.50	1.00	1.00	-0.50	0.50	-0.50	0.50	26.34	-60.94	1082.6	282.8	343.1
5.50	9.43	0.53	0.0	0.70	0.0	0.00	0.00	0.50	1.00	1.00	-0.50	0.50	-0.50	0.50	26.44	-61.36	1082.2	283.3	343.1
5.41	9.43	0.52	0.0	0.70	0.0	0.00	0.00	0.50	1.00	1.00	-0.50	0.50	-0.50	0.50	26.53	-61.79	1081.7	283.8	343.1
5.32	9.43	0.50	0.0	0.70	0.0	0.00	0.00	0.50	1.00	1.00	-0.50	0.50	-0.50	0.50	26.63	-62.21	1081.3	284.4	343.1
5.23	9.43	0.49	0.0	0.70	0.0	0.00	0.00	0.50	1.00	1.00	-0.50	0.50	-0.50	0.50	26.72	-62.64	1080.9	284.9	343.1
5.14	9.43	0.48	0.0	0.70	0.0	0.00	0.00	0.50	1.00	1.00	-0.50	0.50	-0.50	0.50	26.82	-63.06	1080.5	285.4	343.1
5.05	9.43	0.47	0.0	0.70	0.0	0.00	0.00	0.50	1.00	1.00	-0.50	0.50	-0.50	0.50	26.91	-63.49	1080.0	285.9	343.1
4.96	9.43	0.46	0.0	0.70	0.0	0.00	0.00	0.50	1.00	1.00	-0.50	0.50	-0.50	0.50	27.01	-63.91	1079.6	286.4	343.1
4.87	9.43	0.45	0.0	0.70	0.0	0.00	0.00	0.50	1.00	1.00	-0.50	0.50	-0.50	0.50	27.10	-64.34	1079.2	287.0	343.1
4.78	9.43	0.44	0.0	0.70	0.0	0.00	0.00	0.50	1.00	1.00	-0.50	0.50	-0.50	0.50	27.20	-64.76	1078.8	287.5	343.1
4.69	9.43	0.43	0.0	0.70	0.0	0.00	0.00	0.50	1.00	1.00	-0.50	0.50	-0.50	0.50	27.30	-65.19	1078.3	288.0	343.1
4.60	9.43	0.42	0.0	0.70	0.0	0.00	0.00	0.50	1.00	1.00	-0.50	0.50	-0.50	0.50	27.39	-65.61	1077.9	288.5	343.1
4.51	9.43	0.41	0.0	0.70	0.0	0.00	0.00	0.50	1.00	1.00	-0.50	0.50	-0.50	0.50	27.49	-66.04	1077.5	289.0	343.1
4.42	9.43	0.40	0.0	0.70	0.0	0.00	0.00	0.50	1.00	1.00	0.00	0.00	0.00	0.00	27.58	-66.04	1077.5	289.1	343.1
4.33	9.43	0.39	0.0	0.70	0.0	0.00	0.00	0.50	1.00	1.00	0.00	0.00	0.00	0.00	27.68	-66.04	1077.5	289.2	343.1
4.24	9.43	0.39	0.0	0.70	0.0	0.00	0.00	0.50	1.00	1.00	0.00	0.00	0.00	0.00	27.77	-66.04	1077.5	289.3	343.1

4.15	9.43	0.38	0.0	0.70	0.0	0.00	0.00	0.50	1.00	1.00	0.00	0.00	0.00	0.00	27.87	-66.04	1077.5	289.4	343.1
4.06	9.43	0.37	0.0	0.70	0.0	0.00	0.00	0.50	1.00	1.00	0.00	0.00	0.00	0.00	27.96	-66.04	1077.5	289.5	343.1
3.97	9.43	0.36	0.0	0.70	0.0	0.00	0.00	0.50	1.00	1.00	0.00	0.00	0.00	0.00	28.06	-66.04	1077.5	289.6	343.1
3.88	9.43	0.35	0.0	0.70	0.0	0.00	0.00	0.50	1.00	1.00	0.00	0.00	0.00	0.00	28.16	-66.04	1077.5	289.7	343.1
3.79	9.43	0.34	0.0	0.70	0.0	0.00	0.00	0.50	1.00	1.00	0.00	0.00	0.00	0.00	28.25	-66.04	1077.5	289.8	343.1
3.70	9.43	0.34	0.0	0.70	0.0	0.00	0.00	0.50	1.00	1.00	0.00	0.00	0.00	0.00	28.35	-66.04	1077.5	289.9	343.1
3.61	9.43	0.33	0.0	0.70	0.0	0.00	0.00	0.50	1.00	1.00	0.00	0.00	0.00	0.00	28.44	-66.04	1077.5	290.0	343.1
3.52	9.43	0.32	0.0	0.70	0.0	0.00	0.00	0.50	1.00	1.00	0.00	0.00	0.00	0.00	28.54	-66.04	1077.5	290.1	343.1
3.43	9.43	0.31	0.0	0.70	0.0	0.00	0.00	0.50	1.00	1.00	0.00	0.00	0.00	0.00	28.63	-66.04	1077.5	290.2	343.1
3.34	9.43	0.30	0.0	0.70	0.0	0.00	0.00	0.50	1.00	1.00	0.00	0.00	0.00	0.00	28.73	-66.04	1077.5	290.3	343.1
3.25	9.43	0.30	0.0	0.70	0.0	0.00	0.00	0.50	1.00	1.00	0.00	0.00	0.00	0.00	28.82	-66.04	1077.5	290.4	343.1
3.16	9.43	0.29	0.0	0.70	0.0	0.00	0.00	0.50	1.00	1.00	0.00	0.00	0.00	0.00	28.92	-66.04	1077.5	290.5	343.1
3.07	9.43	0.28	0.0	0.70	0.0	0.00	0.00	0.50	1.00	1.00	0.00	0.00	0.00	0.00	29.02	-66.04	1077.5	290.6	343.1
2.98	9.43	0.27	0.0	0.70	0.0	0.00	0.00	0.50	1.00	1.00	0.00	0.00	0.00	0.00	29.11	-66.04	1077.5	290.7	343.1
2.89	9.43	0.26	0.0	0.70	0.0	0.00	0.00	0.50	1.00	1.00	0.00	0.00	0.00	0.00	29.21	-66.04	1077.5	290.8	343.1
2.80	9.43	0.26	0.0	0.70	0.0	0.00	0.00	0.50	1.00	1.00	0.00	0.00	0.00	0.00	29.30	-66.04	1077.5	290.9	343.1
2.71	9.43	0.25	0.0	0.70	0.0	0.00	0.00	0.50	1.00	1.00	0.00	0.00	0.00	0.00	29.40	-66.04	1077.5	291.0	343.1
2.62	9.43	0.24	0.0	0.70	0.0	0.00	0.00	0.50	1.00	1.00	0.00	0.00	0.00	0.00	29.49	-66.04	1077.5	291.1	343.1
2.53	9.43	0.23	0.0	0.70	0.0	0.00	0.00	0.50	1.00	1.00	0.00	0.00	0.00	0.00	29.59	-66.04	1077.5	291.2	343.1
2.43	9.43	0.22	0.0	0.70	0.0	0.00	0.00	0.50	1.00	1.00	0.00	0.00	0.00	0.00	29.69	-66.04	1077.5	291.2	343.1
2.34	9.43	0.22	0.0	0.70	0.0	0.00	0.00	0.50	1.00	1.00	0.00	0.00	0.00	0.00	29.78	-66.04	1077.5	291.3	343.1
2.25	9.43	0.21	0.0	0.70	0.0	0.00	0.00	0.50	1.00	1.00	0.00	0.00	0.00	0.00	29.88	-66.04	1077.5	291.4	343.1
2.16	9.43	0.20	0.0	0.70	0.0	0.00	0.00	0.50	1.00	1.00	0.00	0.00	0.00	0.00	29.97	-66.04	1077.5	291.5	343.1
2.07	9.43	0.19	0.0	0.70	0.0	0.00	0.00	0.50	1.00	1.00	0.00	0.00	0.00	0.00	30.07	-66.04	1077.5	291.6	343.1
1.98	9.43	0.18	0.0	0.70	0.0	0.00	0.00	0.50	1.00	1.00	0.00	0.00	0.00	0.00	30.16	-66.04	1077.5	291.7	343.1
1.89	9.43	0.17	0.0	0.70	0.0	0.00	0.00	0.50	1.00	1.00	0.00	0.00	0.00	0.00	30.26	-66.04	1077.5	291.8	343.1
1.80	9.43	0.17	0.0	0.70	0.0	0.00	0.00	0.50	1.00	1.00	0.00	0.00	0.00	0.00	30.35	-66.04	1077.5	291.9	343.1
1.71	9.43	0.16	0.0	0.70	0.0	0.00	0.00	0.50	1.00	1.00	0.00	0.00	0.00	0.00	30.45	-66.04	1077.5	292.0	343.1
1.62	9.43	0.15	0.0	0.70	0.0	0.00	0.00	0.50	1.00	1.00	0.00	0.00	0.00	0.00	30.55	-66.04	1077.5	292.1	343.1
1.53	9.43	0.14	0.0	0.70	0.0	0.00	0.00	0.50	1.00	1.00	0.00	0.00	0.00	0.00	30.64	-66.04	1077.5	292.2	343.1
1.44	9.43	0.13	0.0	0.70	0.0	0.00	0.00	0.50	1.00	1.00	0.00	0.00	0.00	0.00	30.74	-66.04	1077.5	292.3	343.1
1.35	9.43	0.13	0.0	0.70	0.0	0.00	0.00	0.50	1.00	1.00	0.00	0.00	0.00	0.00	30.83	-66.04	1077.5	292.4	343.1
1.26	9.43	0.12	0.0	0.70	0.0	0.00	0.00	0.50	1.00	1.00	0.00	0.00	0.00	0.00	30.93	-66.04	1077.5	292.5	343.1
1.17	9.43	0.11	0.0	0.70	0.0	0.00	0.00	0.50	1.00	1.00	0.00	0.00	0.00	0.00	31.02	-66.04	1077.5	292.6	343.1
1.08	9.43	0.10	0.0	0.70	0.0	0.00	0.00	0.50	1.00	1.00	0.00	0.00	0.00	0.00	31.12	-66.04	1077.5	292.7	343.1
0.99	9.43	0.09	0.0	0.70	0.0	0.00	0.00	0.50	1.00	1.00	0.00	0.00	0.00	0.00	31.21	-66.04	1077.5	292.8	343.1
0.90	9.43	0.09	0.0	0.70	0.0	0.00	0.00	0.50	1.00	1.00	0.00	0.00	0.00	0.00	31.31	-66.04	1077.5	292.9	343.1
0.81	9.43	0.08	0.0	0.70	0.0	0.00	0.00	0.50	1.00	1.00	0.00	0.00	0.00	0.00	31.41	-66.04	1077.5	293.0	343.1
0.72	9.43	0.07	0.0	0.70	0.0	0.00	0.00	0.50	1.00	1.00	0.00	0.00	0.00	0.00	31.50	-66.04	1077.5	293.1	343.1
0.63	9.43	0.06	0.0	0.70	0.0	0.00	0.00	0.50	1.00	1.00	0.00	0.00	0.00	0.00	31.60	-66.04	1077.5	293.2	343.1
0.54	9.43	0.05	0.0	0.70	0.0	0.00	0.00	0.50	1.00	1.00	0.00	0.00	0.00	0.00	31.69	-66.04	1077.5	293.3	343.1
0.45	9.43	0.04	0.0	0.70	0.0	0.00	0.00	0.50	1.00	1.00	0.00	0.00	0.00	0.00	31.79	-66.04	1077.5	293.3	343.1
0.36	9.43	0.04	0.0	0.70	0.0	0.00	0.00	0.50	1.00	1.00	0.00	0.00	0.00	0.00	31.88	-66.04	1077.5	293.4	343.1
0.27	9.43	0.03	0.0	0.70	0.0	0.00	0.00	0.50	1.00	1.00	0.00	0.00	0.00	0.00	31.98	-66.04	1077.5	293.5	343.1
0.18	9.43	0.02	0.0	0.70	0.0	0.00	0.00	0.50	1.00	1.00	0.00	0.00	0.00	0.00	32.07	-66.04	1077.5	293.6	343.1
0.09	9.43	0.01	0.0	0.70	0.0	0.00	0.00	0.50	1.00	1.00	0.00	0.00	0.00	0.00	32.17	-66.04	1077.5	293.7	343.1
0.00	9.43	0.00	0.0	0.70	0.0	0.00	0.00	0.50	1.00	1.00	0.00	0.00	0.00	0.00	32.27	-66.04	1077.5	293.8	343.1

SETTLEMENT based on Ultimate Loading by Vesic Method (1977):
Ztip=45.00 Btip= 3.00 Cp= 0.135 Cs= 0.209
Xpp=3.817-in Xps= 0.088-in Xtip= 3.905-in
Cp & Cs are average value at bearing stratum from pile tip extend to 4 Btip

At loading: Qtip=881.5-kp Qtop= 1077.5-kp Qside= 195.9-kp
Xtip=3.905-in Xtop= 4.092-in Xshaft= 0.187-in

LOAD - TOTAL SETTLEMENT RELATION (from t-z, and q-w curves):
Based on Vesic Method (1977)

Xtop -in	Xshaft -in	Xtip -in	Qtip -kp	Qside -kp	Qtotal -kp
0.0002	0.0002	0.0000	1.2	0.4	1.6
0.0272	0.0054	0.0218	13.9	33.3	47.1
0.0537	0.0101	0.0435	26.6	61.4	88.0
0.0798	0.0145	0.0653	39.3	85.5	124.7
0.1056	0.0186	0.0871	52.0	105.9	157.9
0.1312	0.0223	0.1088	64.7	123.1	187.8
0.1564	0.0258	0.1306	77.4	137.5	214.9
0.1815	0.0291	0.1524	90.1	149.5	239.5
0.2064	0.0323	0.1741	102.7	159.4	262.1
0.2311	0.0352	0.1959	115.3	167.5	282.8
0.2557	0.0380	0.2177	127.8	174.1	301.9
0.2801	0.0407	0.2394	140.3	179.3	319.6
0.3044	0.0432	0.2612	152.6	183.6	336.2
0.3287	0.0457	0.2830	165.0	186.9	351.8
0.3528	0.0481	0.3047	177.2	189.4	366.6
0.3769	0.0504	0.3265	189.3	191.4	380.7
0.4009	0.0527	0.3483	201.3	192.9	394.2
0.4249	0.0549	0.3700	213.3	193.9	407.2
0.4488	0.0570	0.3918	225.1	194.7	419.8
0.4727	0.0591	0.4136	236.8	195.3	432.0
0.4966	0.0612	0.4353	248.4	195.6	444.0
0.5204	0.0633	0.4571	259.8	195.8	455.7
0.5441	0.0653	0.4789	271.2	195.9	467.1
0.5679	0.0673	0.5006	282.4	195.9	478.3
0.5916	0.0692	0.5224	293.5	195.9	489.3
0.6153	0.0711	0.5442	304.4	195.8	500.2
0.6390	0.0730	0.5659	315.2	195.6	510.8
0.6626	0.0749	0.5877	325.9	195.4	521.2
0.6862	0.0767	0.6095	336.4	195.1	531.5
0.7098	0.0785	0.6312	346.8	194.8	541.6
0.7333	0.0803	0.6530	357.0	194.4	551.4
0.7568	0.0821	0.6748	367.1	194.0	561.1
0.7803	0.0838	0.6965	377.1	193.5	570.6
0.8038	0.0855	0.7183	386.9	193.1	579.9
0.8272	0.0871	0.7401	396.5	192.6	589.1
0.8506	0.0888	0.7618	406.0	192.1	598.1
0.8740	0.0904	0.7836	415.3	191.7	607.0
0.8974	0.0920	0.8054	424.5	191.3	615.9
0.9207	0.0936	0.8271	433.6	191.4	625.0
0.9440	0.0951	0.8489	442.5	191.2	633.7
0.9673	0.0967	0.8707	451.2	191.0	642.2
0.9906	0.0982	0.8924	459.8	190.7	650.5
1.0138	0.0996	0.9142	468.2	190.4	658.7
1.0370	0.1011	0.9360	476.5	190.1	666.6
1.0602	0.1025	0.9577	484.7	189.7	674.4
1.0834	0.1039	0.9795	492.7	189.3	682.0
1.1065	0.1052	1.0013	500.6	188.8	689.4
1.1296	0.1065	1.0230	508.3	188.3	696.6
1.1526	0.1078	1.0448	515.9	187.8	703.6
1.1757	0.1091	1.0666	523.3	187.2	710.5
1.1987	0.1103	1.0883	530.6	186.6	717.2
1.2216	0.1115	1.1101	537.8	186.0	723.8
1.2446	0.1127	1.1319	544.8	185.4	730.2
1.2675	0.1139	1.1536	551.7	184.8	736.5
1.2904	0.1150	1.1754	558.5	184.2	742.6
1.3133	0.1162	1.1972	565.1	183.5	748.7

1.3362	0.1173	1.2189	571.7	182.9	754.6
1.3590	0.1183	1.2407	578.1	182.4	760.4
1.3819	0.1194	1.2625	584.3	181.8	766.1
1.4047	0.1204	1.2842	590.5	181.3	771.8
1.4275	0.1215	1.3060	596.5	180.8	777.3
1.4503	0.1225	1.3278	602.5	180.3	782.8
1.4730	0.1235	1.3495	608.3	179.9	788.2
1.4958	0.1245	1.3713	614.0	179.6	793.6
1.5185	0.1254	1.3931	619.6	179.2	798.8
1.5412	0.1264	1.4148	625.1	178.9	804.1
1.5639	0.1273	1.4366	630.5	178.7	809.2
1.5866	0.1282	1.4584	635.8	178.4	814.2
1.6092	0.1291	1.4801	641.0	178.1	819.2
1.6319	0.1300	1.5019	646.1	177.9	824.0
1.6545	0.1308	1.5237	651.2	177.5	828.7
1.6771	0.1317	1.5454	656.1	177.1	833.2
1.6997	0.1325	1.5672	660.9	176.5	837.5
1.7222	0.1333	1.5890	665.7	175.8	841.5
1.7447	0.1340	1.6107	670.4	174.9	845.3
1.7672	0.1347	1.6325	675.0	173.7	848.7
1.7899	0.1356	1.6543	679.5	174.5	854.0
1.8124	0.1364	1.6760	684.0	174.3	858.3
1.8349	0.1371	1.6978	688.3	174.2	862.5
1.8574	0.1379	1.7196	692.6	174.0	866.6
1.8799	0.1386	1.7413	696.9	173.8	870.7
1.9024	0.1393	1.7631	701.1	173.6	874.7
1.9249	0.1400	1.7849	705.2	173.4	878.6
1.9474	0.1407	1.8066	709.2	173.2	882.5
1.9698	0.1414	1.8284	713.2	173.1	886.3
1.9923	0.1421	1.8502	717.1	172.9	890.0
2.0147	0.1428	1.8719	721.0	172.7	893.7
2.0371	0.1434	1.8937	724.8	172.5	897.3
2.0596	0.1441	1.9155	728.6	172.3	900.9
2.0820	0.1447	1.9372	732.3	172.1	904.5
2.1044	0.1454	1.9590	736.0	171.9	908.0
2.1268	0.1460	1.9808	739.6	171.8	911.4
2.1491	0.1466	2.0025	743.2	171.6	914.8
2.1715	0.1472	2.0243	746.8	171.4	918.2
2.1939	0.1478	2.0461	750.3	171.2	921.5
2.6132	0.1579	2.4553	809.0	167.8	976.8
3.0302	0.1657	2.8645	854.9	164.3	1019.2
3.4438	0.1701	3.2737	881.5	160.8	1042.4
3.8521	0.1692	3.6829	877.9	157.4	1035.3
4.2540	0.1618	4.0921	838.3	153.9	992.2

At Qwork= 366.00-kp Settlement= 0.35184-in
At Qwork= 366.00-kp Secant Stiffness Kqx= 1040.25-kp/-in
At Xallow= 1.00-in Q= 653.80-kp
Note: If the program cannot find a result or the result exceeds the upper limit. The result will be displayed as 99999.

SUMMARY:

Total Ultimate Capacity (Down)= 1077.479-kp Total Ultimate Capacity (Up)= 293.827-kp
Total Allowable Capacity (Down)= 391.815-kp Total Allowable Capacity (Up)= 163.046-kp

Weight above Ground= 0.00 Total Pile Weight= 32.27-kp *Soil Weight is not included
Side Resistance (Down)= 195.933-kp Side Resistance (Up)= 261.560-kp
Tip Resistance (Down)= 881.546-kp Tip Resistance (Up)= 0.000-kp
Negative Friction, Qneg= -66.038-kp, which has been subtracted from Total Ultimate Capacity (Down)
Negative friction does not affect Total Uplift Ultimate Capacity (Up)

OK! Qallow > Q * Vertical Load, Q= 366.0 -kp

FACTOR OF SAFETY:

FSside	FStip	FSup	FSweight
2.0	3.0	2.0	1.0

* FStorsion = FSside

Notes:
* Settlement in the program is Elastic Settlement only. Consolidation Settlement is not calculatedl
Length - Pile length, distance from pile top to tip (not from ground surface)
Width or D - Width of pile shaft (pile diameter)
Ds and Dl - Short Side and Long Side of Footing
Area - Section area of pile shaft or tip area of pile
Sv - Vertical stress in soils (It may be limited based on critical depth, Z_lim or Z/D
qult - Ultimate tip resistance (pressure)
Qtip_dw - Ultimate downward tip resistance (Force or Capacity)
Qtip_up - Ultimate uplift tip resistance for belled pile or uplift plate (Force or Capacity)
Torsion - Ultimate torsion resistance for single pile (Capacity)
dz - Small Segment of Depth for Calculation
Zs - Soil Depth, Depth from ground surface
Zp - Pile Depth, Depth from pile top
Prem - Primer of pile shaft
Phi - Soil internal friction angle (between soils)
Kf - Friction factor to convert Phi to Delta
Delta - Ski friction between soil and pile (function of Phi. It is different from Phi)
f_dw - Downward Resistance between soil and pile from Delta
f_up - Uplift Resistance between soil and pile from Delta
C - Soil cohesion (between soils)
Ca - Adhesion between soil and pile (function of C. It is different from C) Ca=KaKcC
Ka - Adhesion ratio, C/Ca
Kc - Adhesion factor defended by users
Ca_dw - Downward adhesion between pile and soil
Ca_up - Uplift adhesion between pile and soil
Sf_dw - Downward side resistance (sum of friction and adhesion, f_dw + Ca_dw)
Sf_up - Uplift side resistance (sum of friction and adhesion, f_up + Ca_up)
Torsion side resistance = (Sf_dw+Sf_up)/2 * pile diameter/2
Weight - Weight of Pile shaft
Qneg - negative friction Resistance
Qside - Ultimate side resistance (Qside_dw or Qside_up)
Qtip - Ultimate tip resistance (Qtip_dw or Qtip_up for uplift plate)
Q_dw - Ultimate downward capacity (Qtip + Qside_dw)
Q_up - Ultimate uplift capacity (Weight + Qside_up)
E - Elastic modules
Xs - Settlement due to axial deformation of pile shaft
Xpp - Settlement due to point load from pile tip
Xps- Settlement due to load from pile shaft
Xtop - Total settlement, Xs + Xpp + Xps
Xtip - Tip settlement, Xpp + Xps
Xshaft - Shaft deformation, Xs
Xallow - Allowable settlement specified by users
Qwork - Vertical working load applied to pile
Qallow - Vertical allowable load, Qult/F.S.

VERTICAL ANALYSIS

Figure 1

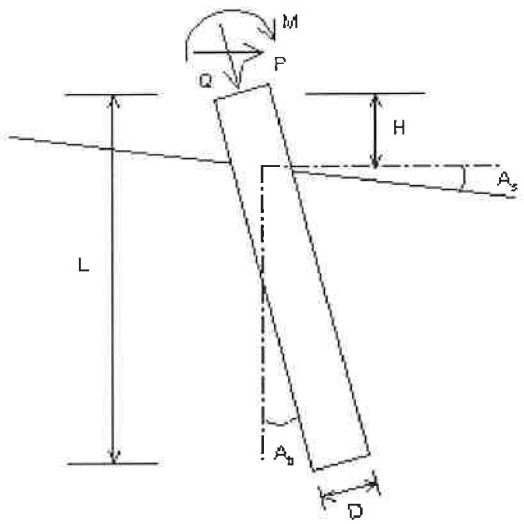

Drilled Shaft (dia >24 in. or 61 cm)

Loads:
Load Factor for Vertical Loads= 1.0
Load Factor for Lateral Loads= 1.0
Loads Supported by Pile Cap= 0 %
Shear Condition: Static

(with Load Factor)
Vertical Load, Q= 430.0 -kp

Profile:
Pile Length, L= 45.0 -ft
Top Height, H= 0 -ft
Slope Angle, As= 0
Batter Angle, Ab= 0

* Zero Friction *
Zero Friction Start: 0 -ft End: 4.5 -ft
* Negative Friction *
Negative Friction Start: 4.5 -ft End: 19.5 -ft with Factor: 1

Soil Data:

Depth -ft	Gamma -lb/f3	Phi	C -kp/f2	K -lb/i3	e50 or Dr %	Nspt
0	90.0	0.0	0.500	313.1	0.87	10
4.5	117.0	0.0	0.50	103.7	1.30	5
10	117.0	0.0	0.500	136.8	1.19	6
12	52.6	32.0	0.00	32.9	35.04	10
19.5	56.8	32.0	0.00	50.8	45.73	15
22	70.4	32.0	0.500	867.8	0.56	21
27	60.4	35.0	0.00	90.0	63.67	28
32	70.2	0.0	1.500	814.1	0.57	20
40	60.7	37.0	0.00	97.3	66.49	31
42.5	66.4	37.0	0.00	148.9	83.39	48

Pile Data:

Depth -ft	Width -in	Area -in2	Per. -in	I -in4	E -kp/i2	Weight -kp/f
0.0	42	1385.4	131.9	152745.0	3000	1.443
45.0						

Vertical Capacity:
Weight above Ground= 0.00 Total Weight= 43.93-kp *Soil Weight is not included
Side Resistance (Down)= 228.497-kp Side Resistance (Up)= 305.037-kp
Tip Resistance (Down)= 1199.816-kp Tip Resistance (Up)= 0.000-kp
Total Ultimate Capacity (Down) Qult= 1428.314-kp Total Ultimate Capacity (Up)= 348.966-kp
Total Allowable Capacity (Down) Qallow= 514.187-kp Total Allowable Capacity (Up) Qallow= 196.448-kp
OK! Qallow > Q

Settlement Calculation:
At Q= 430.00-kp Settlement= 0.35411-in
At Xallow= 1.00-in Q= 791.23682-kp

Note: If the program cannot find a result or the result exceeds the upper limit. The result will be displayed as 99999.

ALLOWABLE CAPACITY vs FOUNDATION DEPTH

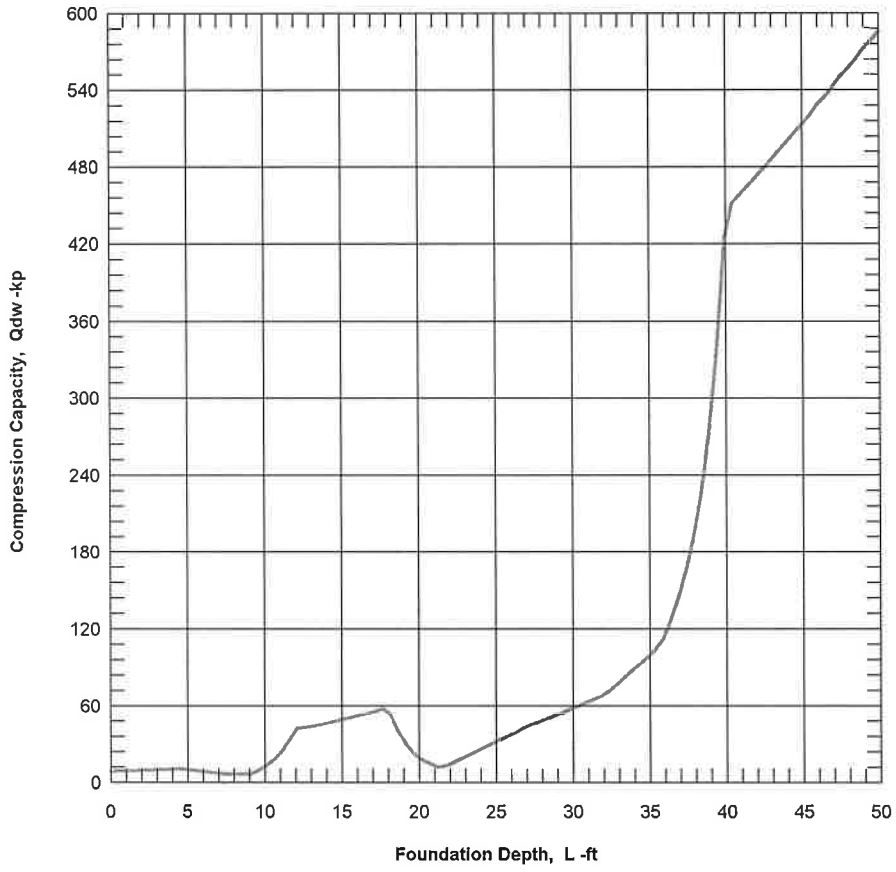

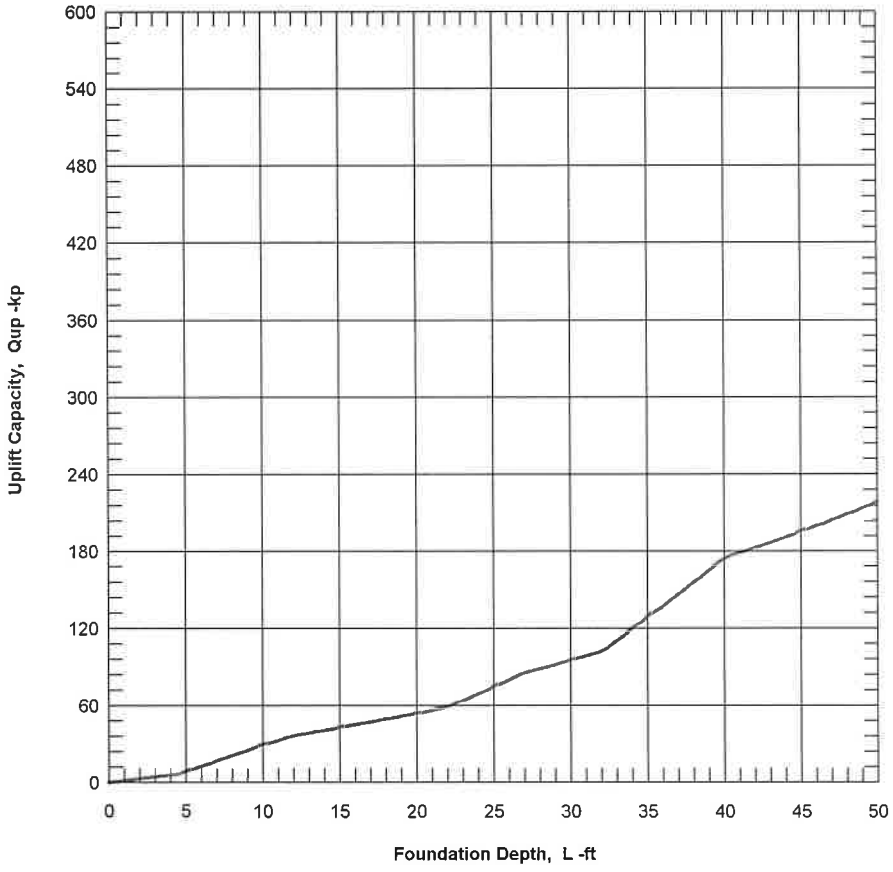

CivilTech Software

16G136 - 42-in-dia Drilled Pier
45-ft-deep; Using B-4 and B-3 data

Figure 1

```
*****************************************************************
                    ALLPILE 7
       VERTICAL ANALYSIS DETAILED OUTPUT
        Copyright by CivilTech Software
                www.civiltech.com
*****************************************************************
Licensed to
Date: 7/8/2019  File: P:\Geotechnical\2016 Geotechnical\16G136 Alston 2 CI Bldgs Long Beach\Deep Foundation Design\Apr 28 2016\Boring B-4 and B-3\42india_45ftdeep_drilled_01.alp
1.0

Title 1: 16G136 - 42-in-dia Drilled Pier
Title 2: 45-ft-deep; Using B-4 and B-3 data

ALLPILE INPUT DATA:
**_____________________________________________________**

* Pile Type Page *
Unit: English
Diameter more than 24in (61cm).  For bell section, select "Belled" in Diameter Variation of Pile Section Screen. Recommendation: 2 to 4 in Item 3 of Page F.
Pile Type: Drilled Shaft (dia >24 in. or 61 cm)

* Pile Profile *
Foundation Depth: 45.0 -ft
Top Height: 0 -ft
Slope Angle: 0
Pile Angle: 0

* Pile Properties *
Zs      Width   Area    Perim.     I       E      Weight  Mix     Out     In      Other.  Type
-ft     -in     -in2    -in     -in4    -kp/i2  -kp/f   %       Side    Side    Par.
_____________________________________________________________________________________________
0.0     42      1385.4  131.9   152745.0        3000    1.443   0.0     4       4       0       Concrete (smooth)
45.0                                                                                            Pile Tip
Note:  Mix = % of Inside material/Outside material

Group Type: 0
Top Type: 1

Water Table: 10 -ft
Ground Elevation: 0 -ft

* Soil Properties *
Zs      Gamma   Phi     C       K       E50/Dr  Nspt    Type    Soil
-ft     -lb/f3  o       -kp/f2  -lb/i3   - %
0.0     90.0    0.0     0.500   313.1   0.87    10      3       Fill
4.5     117.0   0.0     0.50    103.7   1.30    5       1       Alluvium
10.0    117.0   0.0     0.500   136.8   1.19    6       1       Alluvium
12.0    52.6    32.0    0.00    32.9    35.04   10      4       Alluvium
19.5    56.8    32.0    0.00    50.8    45.73   15      4       Alluvium
22.0    70.4    32.0    0.500   867.8   0.56    21      3       Alluvium
27.0    60.4    35.0    0.00    90.0    63.67   28      4       Alluvium
32.0    70.2    0.0     1.500   814.1   0.57    20      2       Alluvium
40.0    60.7    37.0    0.00    97.3    66.49   31      4       Alluvium
42.5    66.4    37.0    0.00    148.9   83.39   48      4       Alluvium

Surcharge Pressure on ground: 0 -kp/f2

* Zero Friction *
Zero Friction Start: 0 -ft      End: 4.5 -ft

* Negative Friction *
Negative Friction Start: 4.5 -ft        End: 19.5 -ft   with Factor: 1

ALLPILE ANALYSIS AND RESULTS:
**_____________________________________________________**

Pile Profile and Loading:
        Piletype: Drilled Shaft (dia >24 in. or 61 cm)
        Pile Length, L= 45.0 -ft
        Top Height, H= 0 -ft
        Slope Angle, As= 0
        Batter Angle, Ab= 0.00

        *To consider the influence of different soils below the pile tip, bearing stratum is defined
        from pile tip extending to 4 Diameter of pile, which is 14.0-ft (Input Page F, Item 3)

Single Pile, Vertical Analysis:
        Vertical Load with Load factor, Q= 430.0 -kp
        Vertical Load with Load factor and Pile Cap, Q= 430.0 -kp
          Load Factor for Vertical Loads= 1.0
          Vertical Loads Supported by Pile Cap: 0 %
          Kdown= 0.7      Kup= 0.4        Ka= 1.00


From Ztip=45.0 to 59.0-ft  Average Properties: Es= 767.92-kp/f2  C=0.00-kp/f2  Friction=37.00 Cp=0.14  Ksand=1.00
Limits of Max. tip resistance, q_lim= N/A
Batter Angle, Ab= 0.00     Batter Factor, Kbat= 1.00
Qtip_dw=1199.8-kp  based on qult=124.7-kp/f2  and Base Area=9.6-ft2
Qtip_up=0.0-kp  and Base Area=0.0-ft2


TIP RESISTANCE (Down) CALCULATION:
Tip Depth= 45.0-ft Critical Depth Ratio Z/D= 20 Critical Depth= 70.0-ft
Equivalent Width of Tip= 3.50-ft,   Tip Area= 9.62-ft2   Tip Diameter= 3.50-ft
Bearing stratum from pile tip extending to 4 Diameter of pile. Bearing stratum= 14.00-ft
Btip: width at pile tip= 3.50-ft (For group pile, it is equivalent width).
Phi & C are average value in bearing stratum.
Batter Angle= 0.00,     Batter Factor for Tip and Side= 1.00

Ztip    Z/D     Z_lim   q_lim   Width   Area'   Phi     C       Nq      Nc      Sv      qult    Qtip_dw
-ft             -ft     -kp/f2  -ft     -ft2    - o     -kp/f2                          -kp/f2  -kp/f2  -kp
_____________________________________________________________________________________________________
45.0    20.0    70.0    N/A     3.50    9.62    37.0    0.00    37.1    9.0     3.4     124.7   1199.8

 Ztip - Depth of pile tip from ground surface (Zs)
 D - Pile average diameter (below ground) for calculation of critical depth.  D=3.50-ft
 Z/D - Critical depth (for tip resistances) as ratio of depth/diameter. Vertical stress will be constant below critical depth
 Z_lim - Critical depth, calculated from Z/D (for tip resistances)
 q_lim -  Limit of Maximum tip resistance
 Btip: width or diameter at pile tip
 Bearing stratum: A stratum from  pile tip extending to some depth. Average soil properties in the stratum are used for bearing calculation


SIDE RESISTANCE (Uplift & Down) CALCULATION:
D       Z/D     Z_lim   Sf_lim  K_dw    K_up    d*
-ft             -ft     -kp/f2                  -ft
_____________________________________________
```

3.50 20.0 70.00 N/A 0.7 0.4 0.090

D - Pile average diameter for calculation of critical depth
Z/D - Critical depth (for side resistances) as ratio of depth/diameter. Vertical stress will be constant below critical depth
Z_lim - Critical depth calculated from Z/D (for side resistances)
Sf_lim - Limit of Maximum side resistance

Users Setting: Ka=1, which is constant. Ca=KcKaC=KcC

SIDE RESISTANCE (Up & Down) CALCULATION vs DEPTH:
Calculation is based on segment dZ= 0.09

Zs -ft	Prem -ft	Sv -kp/f2	Phi - o	Kf(<2) Delta	Delta - o	f_dw -kp/f2	f_up -kp/f2	C -kp/f2	Ka	Kc(<2) Ca	Ca_dw -kp/f2	Ca_up -kp/f2	Sf_dw -kp/f2	Sf_up -kp/f2	Weight -kp	Qneg -kp	Q_dw -kp	Q_up -kp	Torsion -kp-f
45.00	10.99	3.36	37.0	0.70	25.9	1.14	0.65	0.00	1.00	1.00	0.00	0.00	0.00	0.00	0.00	0.00	1199.8	0.0	0.0
44.91	10.99	3.36	37.0	0.70	25.9	1.14	0.65	0.00	1.00	1.00	0.00	0.00	1.14	0.65	0.08	0.00	1200.9	0.7	1.6
44.82	10.99	3.35	37.0	0.70	25.9	1.14	0.65	0.00	1.00	1.00	0.00	0.00	1.14	0.65	0.15	0.00	1202.1	1.4	3.1
44.73	10.99	3.34	37.0	0.70	25.9	1.14	0.65	0.00	1.00	1.00	0.00	0.00	1.14	0.65	0.23	0.00	1203.2	2.2	4.7
44.64	10.99	3.34	37.0	0.70	25.9	1.13	0.65	0.00	1.00	1.00	0.00	0.00	1.13	0.65	0.30	0.00	1204.3	2.9	6.2
44.55	10.99	3.33	37.0	0.70	25.9	1.13	0.65	0.00	1.00	1.00	0.00	0.00	1.13	0.65	0.38	0.00	1205.4	3.6	7.7
44.46	10.99	3.33	37.0	0.70	25.9	1.13	0.65	0.00	1.00	1.00	0.00	0.00	1.13	0.65	0.46	0.00	1206.6	4.3	9.3
44.37	10.99	3.32	37.0	0.70	25.9	1.13	0.64	0.00	1.00	1.00	0.00	0.00	1.13	0.64	0.53	0.00	1207.7	5.0	10.8
44.28	10.99	3.31	37.0	0.70	25.9	1.13	0.64	0.00	1.00	1.00	0.00	0.00	1.13	0.64	0.61	0.00	1208.8	5.7	12.4
44.19	10.99	3.31	37.0	0.70	25.9	1.12	0.64	0.00	1.00	1.00	0.00	0.00	1.12	0.64	0.68	0.00	1209.9	6.5	13.9
44.10	10.99	3.30	37.0	0.70	25.9	1.12	0.64	0.00	1.00	1.00	0.00	0.00	1.12	0.64	0.76	0.00	1211.0	7.2	15.4
44.01	10.99	3.30	37.0	0.70	25.9	1.12	0.64	0.00	1.00	1.00	0.00	0.00	1.12	0.64	0.84	0.00	1212.1	7.9	16.9
43.92	10.99	3.29	37.0	0.70	25.9	1.12	0.64	0.00	1.00	1.00	0.00	0.00	1.12	0.64	0.91	0.00	1213.3	8.6	18.5
43.83	10.99	3.28	37.0	0.70	25.9	1.12	0.64	0.00	1.00	1.00	0.00	0.00	1.12	0.64	0.99	0.00	1214.4	9.3	20.0
43.74	10.99	3.28	37.0	0.70	25.9	1.11	0.64	0.00	1.00	1.00	0.00	0.00	1.11	0.64	1.06	0.00	1215.5	10.0	21.5
43.65	10.99	3.27	37.0	0.70	25.9	1.11	0.64	0.00	1.00	1.00	0.00	0.00	1.11	0.64	1.14	0.00	1216.6	10.7	23.0
43.56	10.99	3.27	37.0	0.70	25.9	1.11	0.63	0.00	1.00	1.00	0.00	0.00	1.11	0.63	1.22	0.00	1217.7	11.4	24.5
43.47	10.99	3.26	37.0	0.70	25.9	1.11	0.63	0.00	1.00	1.00	0.00	0.00	1.11	0.63	1.29	0.00	1218.8	12.1	26.0
43.38	10.99	3.25	37.0	0.70	25.9	1.11	0.63	0.00	1.00	1.00	0.00	0.00	1.11	0.63	1.37	0.00	1219.9	12.8	27.5
43.29	10.99	3.25	37.0	0.70	25.9	1.10	0.63	0.00	1.00	1.00	0.00	0.00	1.10	0.63	1.44	0.00	1221.0	13.5	29.1
43.20	10.99	3.24	37.0	0.70	25.9	1.10	0.63	0.00	1.00	1.00	0.00	0.00	1.10	0.63	1.52	0.00	1222.0	14.2	30.6
43.11	10.99	3.24	37.0	0.70	25.9	1.10	0.63	0.00	1.00	1.00	0.00	0.00	1.10	0.63	1.60	0.00	1223.1	14.9	32.1
43.02	10.99	3.23	37.0	0.70	25.9	1.10	0.63	0.00	1.00	1.00	0.00	0.00	1.10	0.63	1.67	0.00	1224.2	15.6	33.5
42.93	10.99	3.22	37.0	0.70	25.9	1.10	0.63	0.00	1.00	1.00	0.00	0.00	1.10	0.63	1.75	0.00	1225.3	16.3	35.0
42.84	10.99	3.22	37.0	0.70	25.9	1.09	0.63	0.00	1.00	1.00	0.00	0.00	1.09	0.63	1.82	0.00	1226.4	17.0	36.5
42.75	10.99	3.21	37.0	0.70	25.9	1.09	0.62	0.00	1.00	1.00	0.00	0.00	1.09	0.62	1.90	0.00	1227.5	17.7	38.0
42.66	10.99	3.21	37.0	0.70	25.9	1.09	0.62	0.00	1.00	1.00	0.00	0.00	1.09	0.62	1.98	0.00	1228.6	18.4	39.5
42.57	10.99	3.20	37.0	0.70	25.9	1.09	0.62	0.00	1.00	1.00	0.00	0.00	1.09	0.62	2.05	0.00	1229.6	19.1	41.0
42.47	10.99	3.19	37.0	0.70	25.9	1.09	0.62	0.00	1.00	1.00	0.00	0.00	1.09	0.62	2.13	0.00	1230.7	19.8	42.5
42.38	10.99	3.19	37.0	0.70	25.9	1.08	0.62	0.00	1.00	1.00	0.00	0.00	1.08	0.62	2.20	0.00	1231.8	20.5	43.9
42.29	10.99	3.18	37.0	0.70	25.9	1.08	0.62	0.00	1.00	1.00	0.00	0.00	1.08	0.62	2.28	0.00	1232.9	21.2	45.4
42.20	10.99	3.18	37.0	0.70	25.9	1.08	0.62	0.00	1.00	1.00	0.00	0.00	1.08	0.62	2.36	0.00	1233.9	21.8	46.9
42.11	10.99	3.17	37.0	0.70	25.9	1.08	0.62	0.00	1.00	1.00	0.00	0.00	1.08	0.62	2.43	0.00	1235.0	22.5	48.4
42.02	10.99	3.17	37.0	0.70	25.9	1.08	0.62	0.00	1.00	1.00	0.00	0.00	1.08	0.62	2.51	0.00	1236.1	23.2	49.8
41.93	10.99	3.16	37.0	0.70	25.9	1.07	0.61	0.00	1.00	1.00	0.00	0.00	1.07	0.61	2.58	0.00	1237.1	23.9	51.3
41.84	10.99	3.16	37.0	0.70	25.9	1.07	0.61	0.00	1.00	1.00	0.00	0.00	1.07	0.61	2.66	0.00	1238.2	24.6	52.7
41.75	10.99	3.15	37.0	0.70	25.9	1.07	0.61	0.00	1.00	1.00	0.00	0.00	1.07	0.61	2.74	0.00	1239.3	25.3	54.2
41.66	10.99	3.15	37.0	0.70	25.9	1.07	0.61	0.00	1.00	1.00	0.00	0.00	1.07	0.61	2.81	0.00	1240.3	26.0	55.7
41.57	10.99	3.14	37.0	0.70	25.9	1.07	0.61	0.00	1.00	1.00	0.00	0.00	1.07	0.61	2.89	0.00	1241.4	26.6	57.1
41.48	10.99	3.13	37.0	0.70	25.9	1.07	0.61	0.00	1.00	1.00	0.00	0.00	1.07	0.61	2.96	0.00	1242.4	27.3	58.6
41.39	10.99	3.13	37.0	0.70	25.9	1.06	0.61	0.00	1.00	1.00	0.00	0.00	1.06	0.61	3.04	0.00	1243.5	28.0	60.0
41.30	10.99	3.12	37.0	0.70	25.9	1.06	0.61	0.00	1.00	1.00	0.00	0.00	1.06	0.61	3.12	0.00	1244.5	28.7	61.5
41.21	10.99	3.12	37.0	0.70	25.9	1.06	0.61	0.00	1.00	1.00	0.00	0.00	1.06	0.61	3.19	0.00	1245.6	29.3	62.9
41.12	10.99	3.11	37.0	0.70	25.9	1.06	0.60	0.00	1.00	1.00	0.00	0.00	1.06	0.60	3.27	0.00	1246.6	30.0	64.4
41.03	10.99	3.11	37.0	0.70	25.9	1.06	0.60	0.00	1.00	1.00	0.00	0.00	1.06	0.60	3.34	0.00	1247.7	30.7	65.8
40.94	10.99	3.10	37.0	0.70	25.9	1.05	0.60	0.00	1.00	1.00	0.00	0.00	1.05	0.60	3.42	0.00	1248.7	31.4	67.2
40.85	10.99	3.10	37.0	0.70	25.9	1.05	0.60	0.00	1.00	1.00	0.00	0.00	1.05	0.60	3.50	0.00	1249.8	32.0	68.7
40.76	10.99	3.09	37.0	0.70	25.9	1.05	0.60	0.00	1.00	1.00	0.00	0.00	1.05	0.60	3.57	0.00	1250.8	32.7	70.1
40.67	10.99	3.09	37.0	0.70	25.9	1.05	0.60	0.00	1.00	1.00	0.00	0.00	1.05	0.60	3.65	0.00	1251.8	33.4	71.5
40.58	10.99	3.08	37.0	0.70	25.9	1.05	0.60	0.00	1.00	1.00	0.00	0.00	1.05	0.60	3.72	0.00	1252.9	34.0	72.9
40.49	10.99	3.07	37.0	0.70	25.9	1.04	0.60	0.00	1.00	1.00	0.00	0.00	1.04	0.60	3.80	0.00	1253.9	34.7	74.4
40.40	10.99	3.07	37.0	0.70	25.9	1.04	0.60	0.00	1.00	1.00	0.00	0.00	1.04	0.60	3.88	0.00	1255.0	35.4	75.8
40.31	10.99	3.06	37.0	0.70	25.9	1.04	0.59	0.00	1.00	1.00	0.00	0.00	1.04	0.59	3.95	0.00	1256.0	36.0	77.2
40.22	10.99	3.06	37.0	0.70	25.9	1.04	0.59	0.00	1.00	1.00	0.00	0.00	1.04	0.59	4.03	0.00	1257.0	36.7	78.6
40.13	10.99	3.05	37.0	0.70	25.9	1.04	0.59	0.00	1.00	1.00	0.00	0.00	1.04	0.59	4.10	0.00	1258.0	37.4	80.0
40.04	10.99	3.05	37.0	0.70	25.9	1.04	0.59	0.00	1.00	1.00	0.00	0.00	1.04	0.59	4.18	0.00	1259.1	38.0	81.4
39.95	10.99	3.04	0.0	0.70	0.0	0.00	0.00	1.50	1.00	1.00	1.50	1.50	1.50	1.50	4.26	0.00	1260.6	39.6	84.1
39.86	10.99	3.03	0.0	0.70	0.0	0.00	0.00	1.50	1.00	1.00	1.50	1.50	1.50	1.50	4.33	0.00	1262.0	41.2	86.7
39.77	10.99	3.03	0.0	0.70	0.0	0.00	0.00	1.50	1.00	1.00	1.50	1.50	1.50	1.50	4.41	0.00	1263.5	42.7	89.3
39.68	10.99	3.02	0.0	0.70	0.0	0.00	0.00	1.50	1.00	1.00	1.50	1.50	1.50	1.50	4.48	0.00	1265.0	44.3	91.9
39.59	10.99	3.02	0.0	0.70	0.0	0.00	0.00	1.50	1.00	1.00	1.50	1.50	1.50	1.50	4.56	0.00	1266.5	45.9	94.5
39.50	10.99	3.01	0.0	0.70	0.0	0.00	0.00	1.50	1.00	1.00	1.50	1.50	1.50	1.50	4.64	0.00	1268.0	47.4	97.1
39.41	10.99	3.00	0.0	0.70	0.0	0.00	0.00	1.50	1.00	1.00	1.50	1.50	1.50	1.50	4.71	0.00	1269.5	49.0	99.7
39.32	10.99	3.00	0.0	0.70	0.0	0.00	0.00	1.50	1.00	1.00	1.50	1.50	1.50	1.50	4.79	0.00	1271.0	50.5	102.3
39.23	10.99	2.99	0.0	0.70	0.0	0.00	0.00	1.50	1.00	1.00	1.50	1.50	1.50	1.50	4.86	0.00	1272.5	52.1	104.9
39.14	10.99	2.98	0.0	0.70	0.0	0.00	0.00	1.50	1.00	1.00	1.50	1.50	1.50	1.50	4.94	0.00	1273.9	53.7	107.5
39.05	10.99	2.98	0.0	0.70	0.0	0.00	0.00	1.50	1.00	1.00	1.50	1.50	1.50	1.50	5.02	0.00	1275.4	55.2	110.1
38.96	10.99	2.97	0.0	0.70	0.0	0.00	0.00	1.50	1.00	1.00	1.50	1.50	1.50	1.50	5.09	0.00	1276.9	56.8	112.7
38.87	10.99	2.96	0.0	0.70	0.0	0.00	0.00	1.50	1.00	1.00	1.50	1.50	1.50	1.50	5.17	0.00	1278.4	58.4	115.3
38.78	10.99	2.96	0.0	0.70	0.0	0.00	0.00	1.50	1.00	1.00	1.50	1.50	1.50	1.50	5.24	0.00	1279.9	59.9	117.9
38.69	10.99	2.95	0.0	0.70	0.0	0.00	0.00	1.50	1.00	1.00	1.50	1.50	1.50	1.50	5.32	0.00	1281.4	61.5	120.5
38.60	10.99	2.95	0.0	0.70	0.0	0.00	0.00	1.50	1.00	1.00	1.50	1.50	1.50	1.50	5.40	0.00	1282.9	63.0	123.1
38.51	10.99	2.94	0.0	0.70	0.0	0.00	0.00	1.50	1.00	1.00	1.50	1.50	1.50	1.50	5.47	0.00	1284.3	64.6	125.7
38.42	10.99	2.93	0.0	0.70	0.0	0.00	0.00	1.50	1.00	1.00	1.50	1.50	1.50	1.50	5.55	0.00	1285.8	66.2	128.3
38.33	10.99	2.93	0.0	0.70	0.0	0.00	0.00	1.50	1.00	1.00	1.50	1.50	1.50	1.50	5.62	0.00	1287.3	67.7	130.9
38.24	10.99	2.92	0.0	0.70	0.0	0.00	0.00	1.50	1.00	1.00	1.50	1.50	1.50	1.50	5.70	0.00	1288.8	69.3	133.5
38.15	10.99	2.91	0.0	0.70	0.0	0.00	0.00	1.50	1.00	1.00	1.50	1.50	1.50	1.50	5.78	0.00	1290.3	70.9	136.1
38.06	10.99	2.91	0.0	0.70	0.0	0.00	0.00	1.50	1.00	1.00	1.50	1.50	1.50	1.50	5.85	0.00	1291.8	72.4	138.7
37.97	10.99	2.90	0.0	0.70	0.0	0.00	0.00	1.50	1.00	1.00	1.50	1.50	1.50	1.50	5.93	0.00	1293.3	74.0	141.3
37.88	10.99	2.89	0.0	0.70	0.0	0.00	0.00	1.50	1.00	1.00	1.50	1.50	1.50	1.50	6.00	0.00	1294.8	75.5	143.9
37.79	10.99	2.89	0.0	0.70	0.0	0.00	0.00	1.50	1.00	1.00	1.50	1.50	1.50	1.50	6.08	0.00	1296.2	77.1	146.5
37.70	10.99	2.88	0.0	0.70	0.0	0.00	0.00	1.50	1.00	1.00	1.50	1.50	1.50	1.50	6.16	0.00	1297.7	78.7	149.1
37.61	10.99	2.88	0.0	0.70	0.0	0.00	0.00	1.50	1.00	1.00	1.50	1.50	1.50	1.50	6.23	0.00	1299.2	80.2	151.7
37.52	10.99	2.87	0.0	0.70	0.0	0.00	0.00	1.50	1.00	1.00	1.50	1.50	1.50	1.50	6.31	0.00	1300.7	81.8	154.3
37.42	10.99	2.86	0.0	0.70	0.0	0.00	0.00	1.50	1.00	1.00	1.50	1.50	1.50	1.50	6.38	0.00	1302.2	83.4	156.9
37.33	10.99	2.86	0.0	0.70	0.0	0.00	0.00	1.50	1.00	1.00	1.50	1.50	1.50	1.50	6.46	0.00	1303.7	84.9	159.5
37.24	10.99	2.85	0.0	0.70	0.0	0.00	0.00	1.50	1.00	1.00	1.50	1.50	1.50	1.50	6.54	0.00	1305.2	86.5	162.1
37.15	10.99	2.84	0.0	0.70	0.0	0.00	0.00	1.50	1.00	1.00	1.50	1.50	1.50	1.50	6.61	0.00	1306.7	88.1	164.7
37.06	10.99	2.84	0.0	0.70	0.0	0.00	0.00	1.50	1.00	1.00	1.50	1.50	1.50	1.50	6.69	0.00	1308.1	89.6	167.3
36.97	10.99	2.83	0.0	0.70	0.0	0.00	0.00	1.50	1.00	1.00	1.50	1.50	1.50	1.50	6.76	0.00	1309.6	91.2	169.9
36.88	10.99	2.83	0.0	0.70	0.0	0.00	0.00	1.50	1.00	1.00	1.50	1.50	1.50	1.50	6.84	0.00	1311.1	92.7	172.5
36.79	10.99	2.82	0.0	0.70	0.0	0.00	0.00	1.50	1.00	1.00	1.50	1.50	1.50	1.50	6.92	0.00	1312.6	94.3	175.1
36.70	10.99	2.81	0.0	0.70	0.0	0.00	0.00	1.50	1.00	1.00	1.50	1.50	1.50	1.50	6.99	0.00	1314.1	95.9	177.7
36.61	10.99	2.81	0.0	0.70	0.0	0.00	0.00	1.50	1.00	1.00	1.50	1.50	1.50	1.50	7.07	0.00	1315.6	97.4	180.3
36.52	10.99	2.80	0.0	0.70	0.0	0.00	0.00	1.50	1.00	1.00	1.50	1.50	1.50	1.50	7.14	0.00	1317.1	99.0	182.9
36.43	10.99	2.79	0.0	0.70	0.0	0.00	0.00	1.50	1.00	1.00	1.50	1.50	1.50	1.50	7.22	0.00	1318.5	100.6	185.5
36.34	10.99	2.79	0.0	0.70	0.0	0.00	0.00	1.50	1.00	1.00	1.50	1.50	1.50	1.50	7.30	0.00	1320.0	102.1	188.1
36.25	10.99	2.78	0.0	0.70	0.0	0.00	0.00	1.50	1.00	1.00	1.50	1.50	1.50	1.50	7.37	0.00	1321.5	103.7	190.7
36.16	10.99	2.77	0.0	0.70	0.0	0.00	0.00	1.50	1.00	1.00	1.50	1.50	1.50	1.50	7.45	0.00	1323.0	105.2	193.3
36.07	10.99	2.77	0.0	0.70	0.0	0.00	0.00	1.50	1.00	1.00	1.50	1.50	1.50	1.50	7.52	0.00	1324.5	106.8	195.9
35.98	10.99	2.76	0.0	0.70	0.0	0.00	0.00	1.50	1.00	1.00	1.50	1.50	1.50	1.50	7.60	0.00	1326.0	108.4	198.5
35.89	10.99	2.76	0.0	0.70	0.0	0.00	0.00	1.50	1.00	1.00	1.50	1.50	1.50	1.50	7.68	0.00	1327.5	109.9	201.1

35.80	10.99	2.75	0.0	0.70	0.0	0.00	0.00	1.50	1.00	1.00	1.50	1.50	1.50	1.50	7.75	0.00	1329.0	111.5	203.7
35.71	10.99	2.74	0.0	0.70	0.0	0.00	0.00	1.50	1.00	1.00	1.50	1.50	1.50	1.50	7.83	0.00	1330.4	113.1	206.3
35.62	10.99	2.74	0.0	0.70	0.0	0.00	0.00	1.50	1.00	1.00	1.50	1.50	1.50	1.50	7.90	0.00	1331.9	114.6	208.9
35.53	10.99	2.73	0.0	0.70	0.0	0.00	0.00	1.50	1.00	1.00	1.50	1.50	1.50	1.50	7.98	0.00	1333.4	116.2	211.5
35.44	10.99	2.72	0.0	0.70	0.0	0.00	0.00	1.50	1.00	1.00	1.50	1.50	1.50	1.50	8.06	0.00	1334.9	117.7	214.1
35.35	10.99	2.72	0.0	0.70	0.0	0.00	0.00	1.50	1.00	1.00	1.50	1.50	1.50	1.50	8.13	0.00	1336.4	119.3	216.7
35.26	10.99	2.71	0.0	0.70	0.0	0.00	0.00	1.50	1.00	1.00	1.50	1.50	1.50	1.50	8.21	0.00	1337.9	120.9	219.3
35.17	10.99	2.70	0.0	0.70	0.0	0.00	0.00	1.50	1.00	1.00	1.50	1.50	1.50	1.50	8.28	0.00	1339.4	122.4	221.9
35.08	10.99	2.70	0.0	0.70	0.0	0.00	0.00	1.50	1.00	1.00	1.50	1.50	1.50	1.50	8.36	0.00	1340.8	124.0	224.5
34.99	10.99	2.69	0.0	0.70	0.0	0.00	0.00	1.50	1.00	1.00	1.50	1.50	1.50	1.50	8.44	0.00	1342.3	125.6	227.1
34.90	10.99	2.69	0.0	0.70	0.0	0.00	0.00	1.50	1.00	1.00	1.50	1.50	1.50	1.50	8.51	0.00	1343.8	127.1	229.7
34.81	10.99	2.68	0.0	0.70	0.0	0.00	0.00	1.50	1.00	1.00	1.50	1.50	1.50	1.50	8.59	0.00	1345.3	128.7	232.3
34.72	10.99	2.67	0.0	0.70	0.0	0.00	0.00	1.50	1.00	1.00	1.50	1.50	1.50	1.50	8.66	0.00	1346.8	130.2	234.9
34.63	10.99	2.67	0.0	0.70	0.0	0.00	0.00	1.50	1.00	1.00	1.50	1.50	1.50	1.50	8.74	0.00	1348.3	131.8	237.5
34.54	10.99	2.66	0.0	0.70	0.0	0.00	0.00	1.50	1.00	1.00	1.50	1.50	1.50	1.50	8.81	0.00	1349.8	133.4	240.1
34.45	10.99	2.65	0.0	0.70	0.0	0.00	0.00	1.50	1.00	1.00	1.50	1.50	1.50	1.50	8.89	0.00	1351.3	134.9	242.7
34.36	10.99	2.65	0.0	0.70	0.0	0.00	0.00	1.50	1.00	1.00	1.50	1.50	1.50	1.50	8.97	0.00	1352.7	136.5	245.3
34.27	10.99	2.64	0.0	0.70	0.0	0.00	0.00	1.50	1.00	1.00	1.50	1.50	1.50	1.50	9.04	0.00	1354.2	138.1	247.9
34.18	10.99	2.64	0.0	0.70	0.0	0.00	0.00	1.50	1.00	1.00	1.50	1.50	1.50	1.50	9.12	0.00	1355.7	139.6	250.5
34.09	10.99	2.63	0.0	0.70	0.0	0.00	0.00	1.50	1.00	1.00	1.50	1.50	1.50	1.50	9.19	0.00	1357.2	141.2	253.1
34.00	10.99	2.62	0.0	0.70	0.0	0.00	0.00	1.50	1.00	1.00	1.50	1.50	1.50	1.50	9.27	0.00	1358.7	142.8	255.7
33.91	10.99	2.62	0.0	0.70	0.0	0.00	0.00	1.50	1.00	1.00	1.50	1.50	1.50	1.50	9.35	0.00	1360.2	144.3	258.3
33.82	10.99	2.61	0.0	0.70	0.0	0.00	0.00	1.50	1.00	1.00	1.50	1.50	1.50	1.50	9.42	0.00	1361.7	145.9	260.9
33.73	10.99	2.60	0.0	0.70	0.0	0.00	0.00	1.50	1.00	1.00	1.50	1.50	1.50	1.50	9.50	0.00	1363.2	147.4	263.5
33.64	10.99	2.60	0.0	0.70	0.0	0.00	0.00	1.50	1.00	1.00	1.50	1.50	1.50	1.50	9.57	0.00	1364.6	149.0	266.1
33.55	10.99	2.59	0.0	0.70	0.0	0.00	0.00	1.50	1.00	1.00	1.50	1.50	1.50	1.50	9.65	0.00	1366.1	150.6	268.7
33.46	10.99	2.58	0.0	0.70	0.0	0.00	0.00	1.50	1.00	1.00	1.50	1.50	1.50	1.50	9.73	0.00	1367.6	152.1	271.3
33.37	10.99	2.58	0.0	0.70	0.0	0.00	0.00	1.50	1.00	1.00	1.50	1.50	1.50	1.50	9.80	0.00	1369.1	153.7	273.9
33.28	10.99	2.57	0.0	0.70	0.0	0.00	0.00	1.50	1.00	1.00	1.50	1.50	1.50	1.50	9.88	0.00	1370.6	155.3	276.5
33.19	10.99	2.57	0.0	0.70	0.0	0.00	0.00	1.50	1.00	1.00	1.50	1.50	1.50	1.50	9.95	0.00	1372.1	156.8	279.1
33.10	10.99	2.56	0.0	0.70	0.0	0.00	0.00	1.50	1.00	1.00	1.50	1.50	1.50	1.50	10.03	0.00	1373.6	158.4	281.7
33.01	10.99	2.55	0.0	0.70	0.0	0.00	0.00	1.50	1.00	1.00	1.50	1.50	1.50	1.50	10.11	0.00	1375.0	159.9	284.3
32.92	10.99	2.55	0.0	0.70	0.0	0.00	0.00	1.50	1.00	1.00	1.50	1.50	1.50	1.50	10.18	0.00	1376.5	161.5	286.9
32.83	10.99	2.54	0.0	0.70	0.0	0.00	0.00	1.50	1.00	1.00	1.50	1.50	1.50	1.50	10.26	0.00	1378.0	163.1	289.5
32.74	10.99	2.53	0.0	0.70	0.0	0.00	0.00	1.50	1.00	1.00	1.50	1.50	1.50	1.50	10.33	0.00	1379.5	164.6	292.1
32.65	10.99	2.53	0.0	0.70	0.0	0.00	0.00	1.50	1.00	1.00	1.50	1.50	1.50	1.50	10.41	0.00	1381.0	166.2	294.7
32.56	10.99	2.52	0.0	0.70	0.0	0.00	0.00	1.50	1.00	1.00	1.50	1.50	1.50	1.50	10.49	0.00	1382.5	167.8	297.3
32.46	10.99	2.51	0.0	0.70	0.0	0.00	0.00	1.50	1.00	1.00	1.50	1.50	1.50	1.50	10.56	0.00	1384.0	169.3	299.9
32.37	10.99	2.51	0.0	0.70	0.0	0.00	0.00	1.50	1.00	1.00	1.50	1.50	1.50	1.50	10.64	0.00	1385.5	170.9	302.5
32.28	10.99	2.50	0.0	0.70	0.0	0.00	0.00	1.50	1.00	1.00	1.50	1.50	1.50	1.50	10.71	0.00	1386.9	172.4	305.1
32.19	10.99	2.50	0.0	0.70	0.0	0.00	0.00	1.50	1.00	1.00	1.50	1.50	1.50	1.50	10.79	0.00	1388.4	174.0	307.7
32.10	10.99	2.49	0.0	0.70	0.0	0.00	0.00	1.50	1.00	1.00	1.50	1.50	1.50	1.50	10.87	0.00	1389.9	175.6	310.3
32.01	10.99	2.48	0.0	0.70	0.0	0.00	0.00	1.50	1.00	1.00	1.50	1.50	1.50	1.50	10.94	0.00	1391.4	177.1	312.9
31.92	10.99	2.48	35.0	0.70	24.5	0.79	0.45	0.00	1.00	1.00	0.00	0.00	0.79	0.45	11.02	0.00	1392.2	177.7	314.0
31.83	10.99	2.47	35.0	0.70	24.5	0.79	0.45	0.00	1.00	1.00	0.00	0.00	0.79	0.45	11.09	0.00	1393.0	178.2	315.1
31.74	10.99	2.47	35.0	0.70	24.5	0.79	0.45	0.00	1.00	1.00	0.00	0.00	0.79	0.45	11.17	0.00	1393.7	178.7	316.2
31.65	10.99	2.46	35.0	0.70	24.5	0.79	0.45	0.00	1.00	1.00	0.00	0.00	0.79	0.45	11.25	0.00	1394.5	179.2	317.2
31.56	10.99	2.46	35.0	0.70	24.5	0.78	0.45	0.00	1.00	1.00	0.00	0.00	0.78	0.45	11.32	0.00	1395.3	179.7	318.3
31.47	10.99	2.45	35.0	0.70	24.5	0.78	0.45	0.00	1.00	1.00	0.00	0.00	0.78	0.45	11.40	0.00	1396.1	180.3	319.4
31.38	10.99	2.45	35.0	0.70	24.5	0.78	0.45	0.00	1.00	1.00	0.00	0.00	0.78	0.45	11.47	0.00	1396.8	180.8	320.4
31.29	10.99	2.44	35.0	0.70	24.5	0.78	0.44	0.00	1.00	1.00	0.00	0.00	0.78	0.44	11.55	0.00	1397.6	181.3	321.5
31.20	10.99	2.43	35.0	0.70	24.5	0.78	0.44	0.00	1.00	1.00	0.00	0.00	0.78	0.44	11.63	0.00	1398.4	181.8	322.6
31.11	10.99	2.43	35.0	0.70	24.5	0.77	0.44	0.00	1.00	1.00	0.00	0.00	0.77	0.44	11.70	0.00	1399.2	182.3	323.6
31.02	10.99	2.42	35.0	0.70	24.5	0.77	0.44	0.00	1.00	1.00	0.00	0.00	0.77	0.44	11.78	0.00	1399.9	182.8	324.7
30.93	10.99	2.42	35.0	0.70	24.5	0.77	0.44	0.00	1.00	1.00	0.00	0.00	0.77	0.44	11.85	0.00	1400.7	183.4	325.7
30.84	10.99	2.41	35.0	0.70	24.5	0.77	0.44	0.00	1.00	1.00	0.00	0.00	0.77	0.44	11.93	0.00	1401.5	183.9	326.8
30.75	10.99	2.41	35.0	0.70	24.5	0.77	0.44	0.00	1.00	1.00	0.00	0.00	0.77	0.44	12.01	0.00	1402.2	184.4	327.8
30.66	10.99	2.40	35.0	0.70	24.5	0.77	0.44	0.00	1.00	1.00	0.00	0.00	0.77	0.44	12.08	0.00	1403.0	184.9	328.8
30.57	10.99	2.40	35.0	0.70	24.5	0.76	0.44	0.00	1.00	1.00	0.00	0.00	0.76	0.44	12.16	0.00	1403.7	185.4	329.9
30.48	10.99	2.39	35.0	0.70	24.5	0.76	0.44	0.00	1.00	1.00	0.00	0.00	0.76	0.44	12.23	0.00	1404.5	185.9	330.9
30.39	10.99	2.39	35.0	0.70	24.5	0.76	0.43	0.00	1.00	1.00	0.00	0.00	0.76	0.43	12.31	0.00	1405.2	186.4	332.0
30.30	10.99	2.38	35.0	0.70	24.5	0.76	0.43	0.00	1.00	1.00	0.00	0.00	0.76	0.43	12.39	0.00	1406.0	186.9	333.0
30.21	10.99	2.37	35.0	0.70	24.5	0.76	0.43	0.00	1.00	1.00	0.00	0.00	0.76	0.43	12.46	0.00	1406.7	187.4	334.0
30.12	10.99	2.37	35.0	0.70	24.5	0.76	0.43	0.00	1.00	1.00	0.00	0.00	0.76	0.43	12.54	0.00	1407.5	187.9	335.1
30.03	10.99	2.36	35.0	0.70	24.5	0.75	0.43	0.00	1.00	1.00	0.00	0.00	0.75	0.43	12.61	0.00	1408.2	188.4	336.1
29.94	10.99	2.36	35.0	0.70	24.5	0.75	0.43	0.00	1.00	1.00	0.00	0.00	0.75	0.43	12.69	0.00	1409.0	188.9	337.1
29.85	10.99	2.35	35.0	0.70	24.5	0.75	0.43	0.00	1.00	1.00	0.00	0.00	0.75	0.43	12.77	0.00	1409.7	189.4	338.1
29.76	10.99	2.35	35.0	0.70	24.5	0.75	0.43	0.00	1.00	1.00	0.00	0.00	0.75	0.43	12.84	0.00	1410.5	189.9	339.2
29.67	10.99	2.34	35.0	0.70	24.5	0.75	0.43	0.00	1.00	1.00	0.00	0.00	0.75	0.43	12.92	0.00	1411.2	190.4	340.2
29.58	10.99	2.34	35.0	0.70	24.5	0.75	0.43	0.00	1.00	1.00	0.00	0.00	0.75	0.43	12.99	0.00	1412.0	190.9	341.2
29.49	10.99	2.33	35.0	0.70	24.5	0.74	0.42	0.00	1.00	1.00	0.00	0.00	0.74	0.42	13.07	0.00	1412.7	191.4	342.2
29.40	10.99	2.33	35.0	0.70	24.5	0.74	0.42	0.00	1.00	1.00	0.00	0.00	0.74	0.42	13.15	0.00	1413.4	191.9	343.2
29.31	10.99	2.32	35.0	0.70	24.5	0.74	0.42	0.00	1.00	1.00	0.00	0.00	0.74	0.42	13.22	0.00	1414.2	192.4	344.2
29.22	10.99	2.31	35.0	0.70	24.5	0.74	0.42	0.00	1.00	1.00	0.00	0.00	0.74	0.42	13.30	0.00	1414.9	192.9	345.2
29.13	10.99	2.31	35.0	0.70	24.5	0.74	0.42	0.00	1.00	1.00	0.00	0.00	0.74	0.42	13.37	0.00	1415.6	193.4	346.2
29.04	10.99	2.30	35.0	0.70	24.5	0.73	0.42	0.00	1.00	1.00	0.00	0.00	0.73	0.42	13.45	0.00	1416.3	193.9	347.2
28.95	10.99	2.30	35.0	0.70	24.5	0.73	0.42	0.00	1.00	1.00	0.00	0.00	0.73	0.42	13.53	0.00	1417.1	194.4	348.2
28.86	10.99	2.29	35.0	0.70	24.5	0.73	0.42	0.00	1.00	1.00	0.00	0.00	0.73	0.42	13.60	0.00	1417.8	194.9	349.2
28.77	10.99	2.29	35.0	0.70	24.5	0.73	0.42	0.00	1.00	1.00	0.00	0.00	0.73	0.42	13.68	0.00	1418.5	195.4	350.2
28.68	10.99	2.28	35.0	0.70	24.5	0.73	0.42	0.00	1.00	1.00	0.00	0.00	0.73	0.42	13.75	0.00	1419.2	195.9	351.2
28.59	10.99	2.28	35.0	0.70	24.5	0.73	0.41	0.00	1.00	1.00	0.00	0.00	0.73	0.41	13.83	0.00	1420.0	196.3	352.2
28.50	10.99	2.27	35.0	0.70	24.5	0.72	0.41	0.00	1.00	1.00	0.00	0.00	0.72	0.41	13.91	0.00	1420.7	196.8	353.2
28.41	10.99	2.27	35.0	0.70	24.5	0.72	0.41	0.00	1.00	1.00	0.00	0.00	0.72	0.41	13.98	0.00	1421.4	197.3	354.2
28.32	10.99	2.26	35.0	0.70	24.5	0.72	0.41	0.00	1.00	1.00	0.00	0.00	0.72	0.41	14.06	0.00	1422.1	197.8	355.2
28.23	10.99	2.25	35.0	0.70	24.5	0.72	0.41	0.00	1.00	1.00	0.00	0.00	0.72	0.41	14.13	0.00	1422.8	198.3	356.1
28.14	10.99	2.25	35.0	0.70	24.5	0.72	0.41	0.00	1.00	1.00	0.00	0.00	0.72	0.41	14.21	0.00	1423.5	198.8	357.1
28.05	10.99	2.24	35.0	0.70	24.5	0.72	0.41	0.00	1.00	1.00	0.00	0.00	0.72	0.41	14.29	0.00	1424.2	199.2	358.1
27.96	10.99	2.24	35.0	0.70	24.5	0.71	0.41	0.00	1.00	1.00	0.00	0.00	0.71	0.41	14.36	0.00	1425.0	199.7	359.1
27.87	10.99	2.23	35.0	0.70	24.5	0.71	0.41	0.00	1.00	1.00	0.00	0.00	0.71	0.41	14.44	0.00	1425.7	200.2	360.0
27.78	10.99	2.23	35.0	0.70	24.5	0.71	0.41	0.00	1.00	1.00	0.00	0.00	0.71	0.41	14.51	0.00	1426.4	200.7	361.0
27.69	10.99	2.22	35.0	0.70	24.5	0.71	0.41	0.00	1.00	1.00	0.00	0.00	0.71	0.41	14.59	0.00	1427.1	201.2	362.0
27.60	10.99	2.22	35.0	0.70	24.5	0.71	0.40	0.00	1.00	1.00	0.00	0.00	0.71	0.40	14.67	0.00	1427.8	201.6	362.9
27.51	10.99	2.21	35.0	0.70	24.5	0.71	0.40	0.00	1.00	1.00	0.00	0.00	0.71	0.40	14.74	0.00	1428.5	202.1	363.9
27.41	10.99	2.21	35.0	0.70	24.5	0.70	0.40	0.00	1.00	1.00	0.00	0.00	0.70	0.40	14.82	0.00	1429.2	202.6	364.9
27.32	10.99	2.20	35.0	0.70	24.5	0.70	0.40	0.00	1.00	1.00	0.00	0.00	0.70	0.40	14.89	0.00	1429.9	203.1	365.8
27.23	10.99	2.19	35.0	0.70	24.5	0.70	0.40	0.00	1.00	1.00	0.00	0.00	0.70	0.40	14.97	0.00	1430.6	203.5	366.8
27.14	10.99	2.19	35.0	0.70	24.5	0.70	0.40	0.00	1.00	1.00	0.00	0.00	0.70	0.40	15.05	0.00	1431.2	204.0	367.7
27.05	10.99	2.18	35.0	0.70	24.5	0.70	0.40	0.00	1.00	1.00	0.00	0.00	0.70	0.40	15.12	0.00	1431.9	204.5	368.7
26.96	10.99	2.18	32.0	0.70	22.4	0.63	0.36	0.50	1.00	1.00	0.50	0.50	1.13	0.86	15.20	0.00	1433.1	205.4	370.4
26.87	10.99	2.17	32.0	0.70	22.4	0.63	0.36	0.50	1.00	1.00	0.50	0.50	1.13	0.86	15.27	0.00	1434.2	206.3	372.1
26.78	10.99	2.16	32.0	0.70	22.4	0.62	0.36	0.50	1.00	1.00	0.50	0.50	1.12	0.86	15.35	0.00	1435.3	207.3	373.8
26.69	10.99	2.16	32.0	0.70	22.4	0.62	0.36	0.50	1.00	1.00	0.50	0.50	1.12	0.86	15.43	0.00	1436.4	208.2	375.5
26.60	10.99	2.15	32.0	0.70	22.4	0.62	0.35	0.50	1.00	1.00	0.50	0.50	1.12	0.85	15.50	0.00	1437.5	209.1	377.3
26.51	10.99	2.15	32.0	0.70	22.4	0.62	0.35	0.50	1.00	1.00	0.50	0.50	1.12	0.85	15.58	0.00	1438.6	210.0	379.0
26.42	10.99	2.14	32.0	0.70	22.4	0.62	0.35	0.50	1.00	1.00	0.50	0.50	1.12	0.85	15.65	0.00	1439.7	210.9	380.7
26.33	10.99	2.13	32.0	0.70	22.4	0.62	0.35	0.50	1.00	1.00	0.50	0.50	1.12	0.85	15.73	0.00	1440.8	211.9	382.4
26.24	10.99	2.13	32.0	0.70	22.4	0.61	0.35	0.50	1.00	1.00	0.50	0.50	1.11	0.85	15.81	0.00	1441.9	212.8	384.1
26.15	10.99	2.12	32.0	0.70	22.4	0.61	0.35	0.50	1.00	1.00	0.50	0.50	1.11	0.85	15.88	0.00	1443.0	213.7	385.8
26.06	10.99	2.11	32.0	0.70	22.4	0.61	0.35	0.50	1.00	1.00	0.50	0.50	1.11	0.85	15.96	0.00	1444.1	214.6	387.5
25.97	10.99	2.11	32.0	0.70	22.4	0.61	0.35	0.50	1.00	1.00	0.50	0.50	1.11	0.85	16.03	0.00	1445.2	215.5	389.2
25.88	10.99	2.10	32.0	0.70	22.4	0.61	0.35	0.50	1.00	1.00	0.50	0.50	1.11	0.85	16.11	0.00	1446.3	216.5	390.9
25.79	10.99	2.09	32.0	0.70	22.4	0.60	0.35	0.50	1.00	1.00	0.50	0.50	1.10	0.85	16.19	0.00	1447.4	217.4	392.6
25.70	10.99	2.09	32.0	0.70	22.4	0.60	0.34	0.50	1.00	1.00	0.50	0.50	1.10	0.84	16.26	0.00	1448.5	218.3	394.2
25.61	10.99	2.08	32.0	0.70	22.4	0.60	0.34	0.50	1.00	1.00	0.50	0.50	1.10	0.84	16.34	0.00	1449.6	219.2	395.9
25.52	10.99	2.08	32.0	0.70	22.4	0.60	0.34	0.50	1.00	1.00	0.50	0.50	1.10	0.84	16.41	0.00	1450.7	220.1	397.6
25.43	10.99	2.07	32.0	0.70	22.4	0.60	0.34	0.50	1.00	1.00	0.50	0.50	1.10	0.84	16.49	0.00	1451.8	221.0	399.3
25.34	10.99	2.06	32.0	0.70	22.4	0.60	0.34	0.50	1.00	1.00	0.50	0.50	1.10	0.84	16.57	0.00	1452.9	221.9	401.0

25.25	10.99	2.06	32.0	0.70	22.4	0.59	0.34	0.50	1.00	1.00	0.50	0.50	1.09	0.84	16.64	0.00	1454.0	222.8	402.6
25.16	10.99	2.05	32.0	0.70	22.4	0.59	0.34	0.50	1.00	1.00	0.50	0.50	1.09	0.84	16.72	0.00	1455.0	223.7	404.3
25.07	10.99	2.04	32.0	0.70	22.4	0.59	0.34	0.50	1.00	1.00	0.50	0.50	1.09	0.84	16.79	0.00	1456.1	224.6	406.0
24.98	10.99	2.04	32.0	0.70	22.4	0.59	0.34	0.50	1.00	1.00	0.50	0.50	1.09	0.84	16.87	0.00	1457.2	225.5	407.7
24.89	10.99	2.03	32.0	0.70	22.4	0.59	0.33	0.50	1.00	1.00	0.50	0.50	1.09	0.83	16.95	0.00	1458.3	226.4	409.3
24.80	10.99	2.02	32.0	0.70	22.4	0.58	0.33	0.50	1.00	1.00	0.50	0.50	1.08	0.83	17.02	0.00	1459.3	227.4	411.0
24.71	10.99	2.02	32.0	0.70	22.4	0.58	0.33	0.50	1.00	1.00	0.50	0.50	1.08	0.83	17.10	0.00	1460.4	228.3	412.6
24.62	10.99	2.01	32.0	0.70	22.4	0.58	0.33	0.50	1.00	1.00	0.50	0.50	1.08	0.83	17.17	0.00	1461.5	229.2	414.3
24.53	10.99	2.01	32.0	0.70	22.4	0.58	0.33	0.50	1.00	1.00	0.50	0.50	1.08	0.83	17.25	0.00	1462.6	230.1	416.0
24.44	10.99	2.00	32.0	0.70	22.4	0.58	0.33	0.50	1.00	1.00	0.50	0.50	1.08	0.83	17.33	0.00	1463.6	231.0	417.6
24.35	10.99	1.99	32.0	0.70	22.4	0.58	0.33	0.50	1.00	1.00	0.50	0.50	1.08	0.83	17.40	0.00	1464.7	231.8	419.3
24.26	10.99	1.99	32.0	0.70	22.4	0.57	0.33	0.50	1.00	1.00	0.50	0.50	1.07	0.83	17.48	0.00	1465.8	232.7	420.9
24.17	10.99	1.98	32.0	0.70	22.4	0.57	0.33	0.50	1.00	1.00	0.50	0.50	1.07	0.83	17.55	0.00	1466.8	233.6	422.6
24.08	10.99	1.97	32.0	0.70	22.4	0.57	0.33	0.50	1.00	1.00	0.50	0.50	1.07	0.83	17.63	0.00	1467.9	234.5	424.2
23.99	10.99	1.97	32.0	0.70	22.4	0.57	0.32	0.50	1.00	1.00	0.50	0.50	1.07	0.82	17.71	0.00	1468.9	235.4	425.8
23.90	10.99	1.96	32.0	0.70	22.4	0.57	0.32	0.50	1.00	1.00	0.50	0.50	1.07	0.82	17.78	0.00	1470.0	236.3	427.5
23.81	10.99	1.96	32.0	0.70	22.4	0.56	0.32	0.50	1.00	1.00	0.50	0.50	1.06	0.82	17.86	0.00	1471.1	237.2	429.1
23.72	10.99	1.95	32.0	0.70	22.4	0.56	0.32	0.50	1.00	1.00	0.50	0.50	1.06	0.82	17.93	0.00	1472.1	238.1	430.7
23.63	10.99	1.94	32.0	0.70	22.4	0.56	0.32	0.50	1.00	1.00	0.50	0.50	1.06	0.82	18.01	0.00	1473.2	239.0	432.4
23.54	10.99	1.94	32.0	0.70	22.4	0.56	0.32	0.50	1.00	1.00	0.50	0.50	1.06	0.82	18.09	0.00	1474.2	239.9	434.0
23.45	10.99	1.93	32.0	0.70	22.4	0.56	0.32	0.50	1.00	1.00	0.50	0.50	1.06	0.82	18.16	0.00	1475.3	240.8	435.6
23.36	10.99	1.92	32.0	0.70	22.4	0.55	0.32	0.50	1.00	1.00	0.50	0.50	1.05	0.82	18.24	0.00	1476.3	241.7	437.3
23.27	10.99	1.92	32.0	0.70	22.4	0.55	0.32	0.50	1.00	1.00	0.50	0.50	1.05	0.82	18.31	0.00	1477.3	242.5	438.9
23.18	10.99	1.91	32.0	0.70	22.4	0.55	0.32	0.50	1.00	1.00	0.50	0.50	1.05	0.82	18.39	0.00	1478.4	243.4	440.5
23.09	10.99	1.90	32.0	0.70	22.4	0.55	0.31	0.50	1.00	1.00	0.50	0.50	1.05	0.81	18.47	0.00	1479.4	244.3	442.1
23.00	10.99	1.90	32.0	0.70	22.4	0.55	0.31	0.50	1.00	1.00	0.50	0.50	1.05	0.81	18.54	0.00	1480.5	245.2	443.7
22.91	10.99	1.89	32.0	0.70	22.4	0.55	0.31	0.50	1.00	1.00	0.50	0.50	1.05	0.81	18.62	0.00	1481.5	246.1	445.3
22.82	10.99	1.89	32.0	0.70	22.4	0.54	0.31	0.50	1.00	1.00	0.50	0.50	1.04	0.81	18.69	0.00	1482.5	246.9	446.9
22.73	10.99	1.88	32.0	0.70	22.4	0.54	0.31	0.50	1.00	1.00	0.50	0.50	1.04	0.81	18.77	0.00	1483.6	247.8	448.5
22.64	10.99	1.87	32.0	0.70	22.4	0.54	0.31	0.50	1.00	1.00	0.50	0.50	1.04	0.81	18.85	0.00	1484.6	248.7	450.1
22.55	10.99	1.87	32.0	0.70	22.4	0.54	0.31	0.50	1.00	1.00	0.50	0.50	1.04	0.81	18.92	0.00	1485.6	249.6	451.8
22.45	10.99	1.86	32.0	0.70	22.4	0.54	0.31	0.50	1.00	1.00	0.50	0.50	1.04	0.81	19.00	0.00	1486.7	250.5	453.3
22.36	10.99	1.85	32.0	0.70	22.4	0.53	0.31	0.50	1.00	1.00	0.50	0.50	1.03	0.81	19.07	0.00	1487.7	251.3	454.9
22.27	10.99	1.85	32.0	0.70	22.4	0.53	0.30	0.50	1.00	1.00	0.50	0.50	1.03	0.80	19.15	0.00	1488.7	252.2	456.5
22.18	10.99	1.84	32.0	0.70	22.4	0.53	0.30	0.50	1.00	1.00	0.50	0.50	1.03	0.80	19.23	0.00	1489.7	253.1	458.1
22.09	10.99	1.83	32.0	0.70	22.4	0.53	0.30	0.50	1.00	1.00	0.50	0.50	1.03	0.80	19.30	0.00	1490.7	253.9	459.7
22.00	10.99	1.83	32.0	0.70	22.4	0.53	0.30	0.50	1.00	1.00	0.50	0.50	1.03	0.80	19.38	0.00	1491.8	254.8	461.3
21.91	10.99	1.82	32.0	0.70	22.4	0.53	0.30	0.00	1.00	1.00	0.00	0.00	0.53	0.30	19.45	0.00	1492.3	255.2	462.0
21.82	10.99	1.82	32.0	0.70	22.4	0.52	0.30	0.00	1.00	1.00	0.00	0.00	0.52	0.30	19.53	0.00	1492.8	255.6	462.7
21.73	10.99	1.81	32.0	0.70	22.4	0.52	0.30	0.00	1.00	1.00	0.00	0.00	0.52	0.30	19.61	0.00	1493.3	255.9	463.4
21.64	10.99	1.81	32.0	0.70	22.4	0.52	0.30	0.00	1.00	1.00	0.00	0.00	0.52	0.30	19.68	0.00	1493.8	256.3	464.2
21.55	10.99	1.80	32.0	0.70	22.4	0.52	0.30	0.00	1.00	1.00	0.00	0.00	0.52	0.30	19.76	0.00	1494.4	256.7	464.9
21.46	10.99	1.80	32.0	0.70	22.4	0.52	0.30	0.00	1.00	1.00	0.00	0.00	0.52	0.30	19.83	0.00	1494.9	257.0	465.6
21.37	10.99	1.79	32.0	0.70	22.4	0.52	0.30	0.00	1.00	1.00	0.00	0.00	0.52	0.30	19.91	0.00	1495.4	257.4	466.3
21.28	10.99	1.79	32.0	0.70	22.4	0.52	0.29	0.00	1.00	1.00	0.00	0.00	0.52	0.29	19.99	0.00	1495.9	257.8	467.0
21.19	10.99	1.78	32.0	0.70	22.4	0.51	0.29	0.00	1.00	1.00	0.00	0.00	0.51	0.29	20.06	0.00	1496.4	258.2	467.7
21.10	10.99	1.78	32.0	0.70	22.4	0.51	0.29	0.00	1.00	1.00	0.00	0.00	0.51	0.29	20.14	0.00	1496.9	258.5	468.4
21.01	10.99	1.77	32.0	0.70	22.4	0.51	0.29	0.00	1.00	1.00	0.00	0.00	0.51	0.29	20.21	0.00	1497.4	258.9	469.1
20.92	10.99	1.77	32.0	0.70	22.4	0.51	0.29	0.00	1.00	1.00	0.00	0.00	0.51	0.29	20.29	0.00	1497.9	259.2	469.8
20.83	10.99	1.76	32.0	0.70	22.4	0.51	0.29	0.00	1.00	1.00	0.00	0.00	0.51	0.29	20.37	0.00	1498.4	259.6	470.5
20.74	10.99	1.76	32.0	0.70	22.4	0.51	0.29	0.00	1.00	1.00	0.00	0.00	0.51	0.29	20.44	0.00	1498.9	260.0	471.2
20.65	10.99	1.75	32.0	0.70	22.4	0.51	0.29	0.00	1.00	1.00	0.00	0.00	0.51	0.29	20.52	0.00	1499.4	260.3	471.8
20.56	10.99	1.75	32.0	0.70	22.4	0.50	0.29	0.00	1.00	1.00	0.00	0.00	0.50	0.29	20.59	0.00	1499.9	260.7	472.5
20.47	10.99	1.74	32.0	0.70	22.4	0.50	0.29	0.00	1.00	1.00	0.00	0.00	0.50	0.29	20.67	0.00	1500.4	261.1	473.2
20.38	10.99	1.74	32.0	0.70	22.4	0.50	0.29	0.00	1.00	1.00	0.00	0.00	0.50	0.29	20.75	0.00	1500.9	261.4	473.9
20.29	10.99	1.73	32.0	0.70	22.4	0.50	0.29	0.00	1.00	1.00	0.00	0.00	0.50	0.29	20.82	0.00	1501.4	261.8	474.6
20.20	10.99	1.73	32.0	0.70	22.4	0.50	0.28	0.00	1.00	1.00	0.00	0.00	0.50	0.28	20.90	0.00	1501.9	262.1	475.3
20.11	10.99	1.72	32.0	0.70	22.4	0.50	0.28	0.00	1.00	1.00	0.00	0.00	0.50	0.28	20.97	0.00	1502.4	262.5	475.9
20.02	10.99	1.72	32.0	0.70	22.4	0.49	0.28	0.00	1.00	1.00	0.00	0.00	0.49	0.28	21.05	0.00	1502.9	262.8	476.6
19.93	10.99	1.71	32.0	0.70	22.4	0.49	0.28	0.00	1.00	1.00	0.00	0.00	0.49	0.28	21.13	0.00	1503.4	263.2	477.3
19.84	10.99	1.71	32.0	0.70	22.4	0.49	0.28	0.00	1.00	1.00	0.00	0.00	0.49	0.28	21.20	0.00	1503.9	263.6	477.9
19.75	10.99	1.70	32.0	0.70	22.4	0.49	0.28	0.00	1.00	1.00	0.00	0.00	0.49	0.28	21.28	0.00	1504.4	263.9	478.6
19.66	10.99	1.69	32.0	0.70	22.4	0.49	0.28	0.00	1.00	1.00	0.00	0.00	0.49	0.28	21.35	0.00	1504.8	264.3	479.3
19.57	10.99	1.69	32.0	0.70	22.4	0.49	0.28	0.00	1.00	1.00	0.00	0.00	0.49	0.28	21.43	0.00	1505.3	264.6	479.9
19.48	10.99	1.69	32.0	0.70	22.4	-0.49	0.28	0.00	1.00	1.00	0.00	0.00	-0.49	0.28	21.51	-0.48	1504.8	265.0	479.8
19.39	10.99	1.68	32.0	0.70	22.4	-0.48	0.28	0.00	1.00	1.00	0.00	0.00	-0.48	0.28	21.58	-0.96	1504.4	265.3	479.6
19.30	10.99	1.68	32.0	0.70	22.4	-0.48	0.28	0.00	1.00	1.00	0.00	0.00	-0.48	0.28	21.66	-1.44	1503.9	265.7	479.4
19.21	10.99	1.67	32.0	0.70	22.4	-0.48	0.28	0.00	1.00	1.00	0.00	0.00	-0.48	0.28	21.73	-1.92	1503.4	266.0	479.2
19.12	10.99	1.67	32.0	0.70	22.4	-0.48	0.27	0.00	1.00	1.00	0.00	0.00	-0.48	0.27	21.81	-2.40	1502.9	266.4	479.0
19.03	10.99	1.66	32.0	0.70	22.4	-0.48	0.27	0.00	1.00	1.00	0.00	0.00	-0.48	0.27	21.89	-2.87	1502.5	266.7	478.9
18.94	10.99	1.66	32.0	0.70	22.4	-0.48	0.27	0.00	1.00	1.00	0.00	0.00	-0.48	0.27	21.96	-3.35	1502.0	267.1	478.7
18.85	10.99	1.65	32.0	0.70	22.4	-0.48	0.27	0.00	1.00	1.00	0.00	0.00	-0.48	0.27	22.04	-3.82	1501.5	267.4	478.5
18.76	10.99	1.65	32.0	0.70	22.4	-0.48	0.27	0.00	1.00	1.00	0.00	0.00	-0.48	0.27	22.11	-4.29	1501.0	267.8	478.3
18.67	10.99	1.64	32.0	0.70	22.4	-0.47	0.27	0.00	1.00	1.00	0.00	0.00	-0.47	0.27	22.19	-4.76	1500.6	268.1	478.2
18.58	10.99	1.64	32.0	0.70	22.4	-0.47	0.27	0.00	1.00	1.00	0.00	0.00	-0.47	0.27	22.27	-5.23	1500.1	268.4	478.0
18.49	10.99	1.63	32.0	0.70	22.4	-0.47	0.27	0.00	1.00	1.00	0.00	0.00	-0.47	0.27	22.34	-5.69	1499.6	268.8	477.8
18.40	10.99	1.63	32.0	0.70	22.4	-0.47	0.27	0.00	1.00	1.00	0.00	0.00	-0.47	0.27	22.42	-6.16	1499.2	269.1	477.6
18.31	10.99	1.62	32.0	0.70	22.4	-0.47	0.27	0.00	1.00	1.00	0.00	0.00	-0.47	0.27	22.49	-6.62	1498.7	269.5	477.5
18.22	10.99	1.62	32.0	0.70	22.4	-0.47	0.27	0.00	1.00	1.00	0.00	0.00	-0.47	0.27	22.57	-7.09	1498.2	269.8	477.3
18.13	10.99	1.61	32.0	0.70	22.4	-0.47	0.27	0.00	1.00	1.00	0.00	0.00	-0.47	0.27	22.65	-7.55	1497.8	270.1	477.1
18.04	10.99	1.61	32.0	0.70	22.4	-0.46	0.27	0.00	1.00	1.00	0.00	0.00	-0.46	0.27	22.72	-8.01	1497.3	270.5	476.9
17.95	10.99	1.60	32.0	0.70	22.4	-0.46	0.26	0.00	1.00	1.00	0.00	0.00	-0.46	0.26	22.80	-8.47	1496.9	270.8	476.8
17.86	10.99	1.60	32.0	0.70	22.4	-0.46	0.26	0.00	1.00	1.00	0.00	0.00	-0.46	0.26	22.87	-8.92	1496.4	271.2	476.6
17.77	10.99	1.59	32.0	0.70	22.4	-0.46	0.26	0.00	1.00	1.00	0.00	0.00	-0.46	0.26	22.95	-9.38	1495.9	271.5	476.4
17.68	10.99	1.59	32.0	0.70	22.4	-0.46	0.26	0.00	1.00	1.00	0.00	0.00	-0.46	0.26	23.03	-9.84	1495.5	271.8	476.3
17.59	10.99	1.59	32.0	0.70	22.4	-0.46	0.26	0.00	1.00	1.00	0.00	0.00	-0.46	0.26	23.10	-10.29	1495.0	272.2	476.1
17.49	10.99	1.58	32.0	0.70	22.4	-0.46	0.26	0.00	1.00	1.00	0.00	0.00	-0.46	0.26	23.18	-10.74	1494.6	272.5	475.9
17.40	10.99	1.58	32.0	0.70	22.4	-0.45	0.26	0.00	1.00	1.00	0.00	0.00	-0.45	0.26	23.25	-11.19	1494.1	272.8	475.7
17.31	10.99	1.57	32.0	0.70	22.4	-0.45	0.26	0.00	1.00	1.00	0.00	0.00	-0.45	0.26	23.33	-11.64	1493.7	273.2	475.6
17.22	10.99	1.57	32.0	0.70	22.4	-0.45	0.26	0.00	1.00	1.00	0.00	0.00	-0.45	0.26	23.41	-12.09	1493.2	273.5	475.4
17.13	10.99	1.56	32.0	0.70	22.4	-0.45	0.26	0.00	1.00	1.00	0.00	0.00	-0.45	0.26	23.48	-12.54	1492.8	273.8	475.2
17.04	10.99	1.56	32.0	0.70	22.4	-0.45	0.26	0.00	1.00	1.00	0.00	0.00	-0.45	0.26	23.56	-12.98	1492.3	274.2	475.1
16.95	10.99	1.55	32.0	0.70	22.4	-0.45	0.26	0.00	1.00	1.00	0.00	0.00	-0.45	0.26	23.63	-13.43	1491.9	274.5	474.9
16.86	10.99	1.55	32.0	0.70	22.4	-0.45	0.26	0.00	1.00	1.00	0.00	0.00	-0.45	0.26	23.71	-13.87	1491.5	274.8	474.7
16.77	10.99	1.54	32.0	0.70	22.4	-0.45	0.25	0.00	1.00	1.00	0.00	0.00	-0.45	0.25	23.79	-14.31	1491.0	275.1	474.6
16.68	10.99	1.54	32.0	0.70	22.4	-0.44	0.25	0.00	1.00	1.00	0.00	0.00	-0.44	0.25	23.86	-14.75	1490.6	275.5	474.4
16.59	10.99	1.53	32.0	0.70	22.4	-0.44	0.25	0.00	1.00	1.00	0.00	0.00	-0.44	0.25	23.94	-15.19	1490.1	275.8	474.3
16.50	10.99	1.53	32.0	0.70	22.4	-0.44	0.25	0.00	1.00	1.00	0.00	0.00	-0.44	0.25	24.01	-15.62	1489.7	276.1	474.1
16.41	10.99	1.52	32.0	0.70	22.4	-0.44	0.25	0.00	1.00	1.00	0.00	0.00	-0.44	0.25	24.09	-16.06	1489.3	276.5	473.9
16.32	10.99	1.52	32.0	0.70	22.4	-0.44	0.25	0.00	1.00	1.00	0.00	0.00	-0.44	0.25	24.17	-16.49	1488.8	276.8	473.8
16.23	10.99	1.51	32.0	0.70	22.4	-0.44	0.25	0.00	1.00	1.00	0.00	0.00	-0.44	0.25	24.24	-16.93	1488.4	277.1	473.6
16.14	10.99	1.51	32.0	0.70	22.4	-0.44	0.25	0.00	1.00	1.00	0.00	0.00	-0.44	0.25	24.32	-17.36	1488.0	277.4	473.4
16.05	10.99	1.50	32.0	0.70	22.4	-0.43	0.25	0.00	1.00	1.00	0.00	0.00	-0.43	0.25	24.39	-17.79	1487.5	277.7	473.3
15.96	10.99	1.50	32.0	0.70	22.4	-0.43	0.25	0.00	1.00	1.00	0.00	0.00	-0.43	0.25	24.47	-18.22	1487.1	278.1	473.1
15.87	10.99	1.50	32.0	0.70	22.4	-0.43	0.25	0.00	1.00	1.00	0.00	0.00	-0.43	0.25	24.55	-18.65	1486.7	278.4	473.0
15.78	10.99	1.49	32.0	0.70	22.4	-0.43	0.25	0.00	1.00	1.00	0.00	0.00	-0.43	0.25	24.62	-19.07	1486.3	278.7	472.8
15.69	10.99	1.49	32.0	0.70	22.4	-0.43	0.24	0.00	1.00	1.00	0.00	0.00	-0.43	0.24	24.70	-19.50	1485.8	279.0	472.6
15.60	10.99	1.48	32.0	0.70	22.4	-0.43	0.24	0.00	1.00	1.00	0.00	0.00	-0.43	0.24	24.77	-19.92	1485.4	279.3	472.5
15.51	10.99	1.48	32.0	0.70	22.4	-0.43	0.24	0.00	1.00	1.00	0.00	0.00	-0.43	0.24	24.85	-20.34	1485.0	279.7	472.3
15.42	10.99	1.47	32.0	0.70	22.4	-0.42	0.24	0.00	1.00	1.00	0.00	0.00	-0.42	0.24	24.93	-20.76	1484.6	280.0	472.2
15.33	10.99	1.47	32.0	0.70	22.4	-0.42	0.24	0.00	1.00	1.00	0.00	0.00	-0.42	0.24	25.00	-21.18	1484.1	280.3	472.0
15.24	10.99	1.46	32.0	0.70	22.4	-0.42	0.24	0.00	1.00	1.00	0.00	0.00	-0.42	0.24	25.08	-21.60	1483.7	280.6	471.8
15.15	10.99	1.46	32.0	0.70	22.4	-0.42	0.24	0.00	1.00	1.00	0.00	0.00	-0.42	0.24	25.15	-22.02	1483.3	280.9	471.7
15.06	10.99	1.45	32.0	0.70	22.4	-0.42	0.24	0.00	1.00	1.00	0.00	0.00	-0.42	0.24	25.23	-22.43	1482.9	281.2	471.5
14.97	10.99	1.45	32.0	0.70	22.4	-0.42	0.24	0.00	1.00	1.00	0.00	0.00	-0.42	0.24	25.31	-22.85	1482.5	281.5	471.4
14.88	10.99	1.44	32.0	0.70	22.4	-0.42	0.24	0.00	1.00	1.00	0.00	0.00	-0.42	0.24	25.38	-23.26	1482.1	281.9	471.2
14.79	10.99	1.44	32.0	0.70	22.4	-0.42	0.24	0.00	1.00	1.00	0.00	0.00	-0.42	0.24	25.46	-23.67	1481.7	282.2	471.1

14.70	10.99	1.43	32.0	0.70	22.4	-0.41	0.24	0.00	1.00	1.00	0.00	0.00	-0.41	0.24	25.53	-24.08	1481.2	282.5	470.9
14.61	10.99	1.43	32.0	0.70	22.4	-0.41	0.24	0.00	1.00	1.00	0.00	0.00	-0.41	0.24	25.61	-24.49	1480.8	282.8	470.8
14.52	10.99	1.42	32.0	0.70	22.4	-0.41	0.23	0.00	1.00	1.00	0.00	0.00	-0.41	0.23	25.69	-24.90	1480.4	283.1	470.6
14.43	10.99	1.42	32.0	0.70	22.4	-0.41	0.23	0.00	1.00	1.00	0.00	0.00	-0.41	0.23	25.76	-25.30	1480.0	283.4	470.5
14.34	10.99	1.41	32.0	0.70	22.4	-0.41	0.23	0.00	1.00	1.00	0.00	0.00	-0.41	0.23	25.84	-25.71	1479.6	283.7	470.3
14.25	10.99	1.41	32.0	0.70	22.4	-0.41	0.23	0.00	1.00	1.00	0.00	0.00	-0.41	0.23	25.91	-26.11	1479.2	284.0	470.2
14.16	10.99	1.41	32.0	0.70	22.4	-0.41	0.23	0.00	1.00	1.00	0.00	0.00	-0.41	0.23	25.99	-26.51	1478.8	284.3	470.0
14.07	10.99	1.40	32.0	0.70	22.4	-0.40	0.23	0.00	1.00	1.00	0.00	0.00	-0.40	0.23	26.06	-26.92	1478.4	284.6	469.9
13.98	10.99	1.40	32.0	0.70	22.4	-0.40	0.23	0.00	1.00	1.00	0.00	0.00	-0.40	0.23	26.14	-27.31	1478.0	284.9	469.7
13.89	10.99	1.39	32.0	0.70	22.4	-0.40	0.23	0.00	1.00	1.00	0.00	0.00	-0.40	0.23	26.22	-27.71	1477.6	285.2	469.6
13.80	10.99	1.39	32.0	0.70	22.4	-0.40	0.23	0.00	1.00	1.00	0.00	0.00	-0.40	0.23	26.29	-28.11	1477.2	285.5	469.4
13.71	10.99	1.38	32.0	0.70	22.4	-0.40	0.23	0.00	1.00	1.00	0.00	0.00	-0.40	0.23	26.37	-28.50	1476.8	285.8	469.3
13.62	10.99	1.38	32.0	0.70	22.4	-0.40	0.23	0.00	1.00	1.00	0.00	0.00	-0.40	0.23	26.44	-28.90	1476.4	286.1	469.1
13.53	10.99	1.37	32.0	0.70	22.4	-0.40	0.23	0.00	1.00	1.00	0.00	0.00	-0.40	0.23	26.52	-29.29	1476.0	286.4	469.0
13.44	10.99	1.37	32.0	0.70	22.4	-0.39	0.23	0.00	1.00	1.00	0.00	0.00	-0.39	0.23	26.60	-29.68	1475.6	286.7	468.8
13.35	10.99	1.36	32.0	0.70	22.4	-0.39	0.22	0.00	1.00	1.00	0.00	0.00	-0.39	0.22	26.67	-30.07	1475.3	287.0	468.7
13.26	10.99	1.36	32.0	0.70	22.4	-0.39	0.22	0.00	1.00	1.00	0.00	0.00	-0.39	0.22	26.75	-30.46	1474.9	287.3	468.5
13.17	10.99	1.35	32.0	0.70	22.4	-0.39	0.22	0.00	1.00	1.00	0.00	0.00	-0.39	0.22	26.82	-30.85	1474.5	287.6	468.4
13.08	10.99	1.35	32.0	0.70	22.4	-0.39	0.22	0.00	1.00	1.00	0.00	0.00	-0.39	0.22	26.90	-31.23	1474.1	287.9	468.2
12.99	10.99	1.34	32.0	0.70	22.4	-0.39	0.22	0.00	1.00	1.00	0.00	0.00	-0.39	0.22	26.98	-31.62	1473.7	288.2	468.1
12.90	10.99	1.34	32.0	0.70	22.4	-0.39	0.22	0.00	1.00	1.00	0.00	0.00	-0.39	0.22	27.05	-32.00	1473.3	288.5	467.9
12.81	10.99	1.33	32.0	0.70	22.4	-0.38	0.22	0.00	1.00	1.00	0.00	0.00	-0.38	0.22	27.13	-32.38	1472.9	288.8	467.8
12.72	10.99	1.33	32.0	0.70	22.4	-0.38	0.22	0.00	1.00	1.00	0.00	0.00	-0.38	0.22	27.20	-32.76	1472.6	289.1	467.7
12.63	10.99	1.32	32.0	0.70	22.4	-0.38	0.22	0.00	1.00	1.00	0.00	0.00	-0.38	0.22	27.28	-33.14	1472.2	289.4	467.5
12.54	10.99	1.32	32.0	0.70	22.4	-0.38	0.22	0.00	1.00	1.00	0.00	0.00	-0.38	0.22	27.36	-33.52	1471.8	289.7	467.4
12.44	10.99	1.32	32.0	0.70	22.4	-0.38	0.22	0.00	1.00	1.00	0.00	0.00	-0.38	0.22	27.43	-33.89	1471.4	290.0	467.2
12.35	10.99	1.31	32.0	0.70	22.4	-0.38	0.22	0.00	1.00	1.00	0.00	0.00	-0.38	0.22	27.51	-34.27	1471.1	290.3	467.1
12.26	10.99	1.31	32.0	0.70	22.4	-0.38	0.22	0.00	1.00	1.00	0.00	0.00	-0.38	0.22	27.58	-34.64	1470.7	290.6	467.0
12.17	10.99	1.30	32.0	0.70	22.4	-0.38	0.21	0.00	1.00	1.00	0.00	0.00	-0.38	0.21	27.66	-35.01	1470.3	290.9	466.8
12.08	10.99	1.30	32.0	0.70	22.4	-0.37	0.21	0.00	1.00	1.00	0.00	0.00	-0.37	0.21	27.74	-35.38	1469.9	291.1	466.7
11.99	10.99	1.29	0.0	0.70	0.0	0.00	0.00	0.50	1.00	1.00	-0.50	0.50	-0.50	0.50	27.81	-35.88	1469.4	291.7	466.7
11.90	10.99	1.28	0.0	0.70	0.0	0.00	0.00	0.50	1.00	1.00	-0.50	0.50	-0.50	0.50	27.89	-36.37	1469.0	292.3	466.7
11.81	10.99	1.26	0.0	0.70	0.0	0.00	0.00	0.50	1.00	1.00	-0.50	0.50	-0.50	0.50	27.96	-36.87	1468.5	292.9	466.7
11.72	10.99	1.25	0.0	0.70	0.0	0.00	0.00	0.50	1.00	1.00	-0.50	0.50	-0.50	0.50	28.04	-37.37	1468.0	293.4	466.7
11.63	10.99	1.24	0.0	0.70	0.0	0.00	0.00	0.50	1.00	1.00	-0.50	0.50	-0.50	0.50	28.12	-37.86	1467.5	294.0	466.7
11.54	10.99	1.23	0.0	0.70	0.0	0.00	0.00	0.50	1.00	1.00	-0.50	0.50	-0.50	0.50	28.19	-38.36	1467.0	294.6	466.7
11.45	10.99	1.22	0.0	0.70	0.0	0.00	0.00	0.50	1.00	1.00	-0.50	0.50	-0.50	0.50	28.27	-38.85	1466.5	295.1	466.7
11.36	10.99	1.21	0.0	0.70	0.0	0.00	0.00	0.50	1.00	1.00	-0.50	0.50	-0.50	0.50	28.34	-39.35	1466.0	295.7	466.7
11.27	10.99	1.20	0.0	0.70	0.0	0.00	0.00	0.50	1.00	1.00	-0.50	0.50	-0.50	0.50	28.42	-39.84	1465.5	296.3	466.7
11.18	10.99	1.19	0.0	0.70	0.0	0.00	0.00	0.50	1.00	1.00	-0.50	0.50	-0.50	0.50	28.50	-40.34	1465.0	296.9	466.7
11.09	10.99	1.18	0.0	0.70	0.0	0.00	0.00	0.50	1.00	1.00	-0.50	0.50	-0.50	0.50	28.57	-40.84	1464.5	297.4	466.7
11.00	10.99	1.17	0.0	0.70	0.0	0.00	0.00	0.50	1.00	1.00	-0.50	0.50	-0.50	0.50	28.65	-41.33	1464.0	298.0	466.7
10.91	10.99	1.16	0.0	0.70	0.0	0.00	0.00	0.50	1.00	1.00	-0.50	0.50	-0.50	0.50	28.72	-41.83	1463.5	298.6	466.7
10.82	10.99	1.15	0.0	0.70	0.0	0.00	0.00	0.50	1.00	1.00	-0.50	0.50	-0.50	0.50	28.80	-42.32	1463.0	299.1	466.7
10.73	10.99	1.14	0.0	0.70	0.0	0.00	0.00	0.50	1.00	1.00	-0.50	0.50	-0.50	0.50	28.88	-42.82	1462.5	299.7	466.7
10.64	10.99	1.13	0.0	0.70	0.0	0.00	0.00	0.50	1.00	1.00	-0.50	0.50	-0.50	0.50	28.95	-43.31	1462.0	300.3	466.7
10.55	10.99	1.12	0.0	0.70	0.0	0.00	0.00	0.50	1.00	1.00	-0.50	0.50	-0.50	0.50	29.03	-43.81	1461.5	300.9	466.7
10.46	10.99	1.11	0.0	0.70	0.0	0.00	0.00	0.50	1.00	1.00	-0.50	0.50	-0.50	0.50	29.10	-44.30	1461.0	301.4	466.7
10.37	10.99	1.10	0.0	0.70	0.0	0.00	0.00	0.50	1.00	1.00	-0.50	0.50	-0.50	0.50	29.18	-44.80	1460.5	302.0	466.7
10.28	10.99	1.09	0.0	0.70	0.0	0.00	0.00	0.50	1.00	1.00	-0.50	0.50	-0.50	0.50	29.26	-45.30	1460.0	302.6	466.7
10.19	10.99	1.07	0.0	0.70	0.0	0.00	0.00	0.50	1.00	1.00	-0.50	0.50	-0.50	0.50	29.33	-45.79	1459.5	303.1	466.7
10.10	10.99	1.06	0.0	0.70	0.0	0.00	0.00	0.50	1.00	1.00	-0.50	0.50	-0.50	0.50	29.41	-46.29	1459.0	303.7	466.7
10.01	10.99	1.05	0.0	0.70	0.0	0.00	0.00	0.50	1.00	1.00	-0.50	0.50	-0.50	0.50	29.48	-46.78	1458.5	304.3	466.7
9.92	10.99	1.04	0.0	0.70	0.0	0.00	0.00	0.50	1.00	1.00	-0.50	0.50	-0.50	0.50	29.61	-47.28	1458.1	304.9	466.7
9.83	10.99	1.03	0.0	0.70	0.0	0.00	0.00	0.50	1.00	1.00	-0.50	0.50	-0.50	0.50	29.74	-47.77	1457.6	305.5	466.7
9.74	10.99	1.02	0.0	0.70	0.0	0.00	0.00	0.50	1.00	1.00	-0.50	0.50	-0.50	0.50	29.87	-48.27	1457.1	306.2	466.7
9.65	10.99	1.01	0.0	0.70	0.0	0.00	0.00	0.50	1.00	1.00	-0.50	0.50	-0.50	0.50	30.01	-48.77	1456.6	306.8	466.7
9.56	10.99	1.00	0.0	0.70	0.0	0.00	0.00	0.50	1.00	1.00	-0.50	0.50	-0.50	0.50	30.14	-49.26	1456.1	307.4	466.7
9.47	10.99	0.99	0.0	0.70	0.0	0.00	0.00	0.50	1.00	1.00	-0.50	0.50	-0.50	0.50	30.27	-49.76	1455.6	308.0	466.7
9.38	10.99	0.98	0.0	0.70	0.0	0.00	0.00	0.50	1.00	1.00	-0.50	0.50	-0.50	0.50	30.40	-50.25	1455.1	308.7	466.7
9.29	10.99	0.97	0.0	0.70	0.0	0.00	0.00	0.50	1.00	1.00	-0.50	0.50	-0.50	0.50	30.53	-50.75	1454.6	309.3	466.7
9.20	10.99	0.96	0.0	0.70	0.0	0.00	0.00	0.50	1.00	1.00	-0.50	0.50	-0.50	0.50	30.66	-51.24	1454.1	309.9	466.7
9.11	10.99	0.95	0.0	0.70	0.0	0.00	0.00	0.50	1.00	1.00	-0.50	0.50	-0.50	0.50	30.79	-51.74	1453.6	310.5	466.7
9.02	10.99	0.94	0.0	0.70	0.0	0.00	0.00	0.50	1.00	1.00	-0.50	0.50	-0.50	0.50	30.92	-52.23	1453.1	311.2	466.7
8.93	10.99	0.93	0.0	0.70	0.0	0.00	0.00	0.50	1.00	1.00	-0.50	0.50	-0.50	0.50	31.05	-52.73	1452.6	311.8	466.7
8.84	10.99	0.92	0.0	0.70	0.0	0.00	0.00	0.50	1.00	1.00	-0.50	0.50	-0.50	0.50	31.18	-53.23	1452.1	312.4	466.7
8.75	10.99	0.91	0.0	0.70	0.0	0.00	0.00	0.50	1.00	1.00	-0.50	0.50	-0.50	0.50	31.31	-53.72	1451.6	313.1	466.7
8.66	10.99	0.90	0.0	0.70	0.0	0.00	0.00	0.50	1.00	1.00	-0.50	0.50	-0.50	0.50	31.44	-54.22	1451.1	313.7	466.7
8.57	10.99	0.88	0.0	0.70	0.0	0.00	0.00	0.50	1.00	1.00	-0.50	0.50	-0.50	0.50	31.57	-54.71	1450.6	314.3	466.7
8.48	10.99	0.87	0.0	0.70	0.0	0.00	0.00	0.50	1.00	1.00	-0.50	0.50	-0.50	0.50	31.70	-55.21	1450.1	314.9	466.7
8.39	10.99	0.86	0.0	0.70	0.0	0.00	0.00	0.50	1.00	1.00	-0.50	0.50	-0.50	0.50	31.83	-55.70	1449.6	315.6	466.7
8.30	10.99	0.85	0.0	0.70	0.0	0.00	0.00	0.50	1.00	1.00	-0.50	0.50	-0.50	0.50	31.96	-56.20	1449.1	316.2	466.7
8.21	10.99	0.84	0.0	0.70	0.0	0.00	0.00	0.50	1.00	1.00	-0.50	0.50	-0.50	0.50	32.09	-56.70	1448.6	316.8	466.7
8.12	10.99	0.83	0.0	0.70	0.0	0.00	0.00	0.50	1.00	1.00	-0.50	0.50	-0.50	0.50	32.22	-57.19	1448.1	317.4	466.7
8.03	10.99	0.82	0.0	0.70	0.0	0.00	0.00	0.50	1.00	1.00	-0.50	0.50	-0.50	0.50	32.35	-57.69	1447.6	318.1	466.7
7.94	10.99	0.81	0.0	0.70	0.0	0.00	0.00	0.50	1.00	1.00	-0.50	0.50	-0.50	0.50	32.48	-58.18	1447.1	318.7	466.7
7.85	10.99	0.80	0.0	0.70	0.0	0.00	0.00	0.50	1.00	1.00	-0.50	0.50	-0.50	0.50	32.61	-58.68	1446.7	319.3	466.7
7.76	10.99	0.79	0.0	0.70	0.0	0.00	0.00	0.50	1.00	1.00	-0.50	0.50	-0.50	0.50	32.74	-59.17	1446.2	319.9	466.7
7.67	10.99	0.78	0.0	0.70	0.0	0.00	0.00	0.50	1.00	1.00	-0.50	0.50	-0.50	0.50	32.87	-59.67	1445.7	320.6	466.7
7.58	10.99	0.77	0.0	0.70	0.0	0.00	0.00	0.50	1.00	1.00	-0.50	0.50	-0.50	0.50	33.00	-60.16	1445.2	321.2	466.7
7.48	10.99	0.76	0.0	0.70	0.0	0.00	0.00	0.50	1.00	1.00	-0.50	0.50	-0.50	0.50	33.13	-60.66	1444.7	321.8	466.7
7.39	10.99	0.75	0.0	0.70	0.0	0.00	0.00	0.50	1.00	1.00	-0.50	0.50	-0.50	0.50	33.26	-61.16	1444.2	322.4	466.7
7.30	10.99	0.74	0.0	0.70	0.0	0.00	0.00	0.50	1.00	1.00	-0.50	0.50	-0.50	0.50	33.39	-61.65	1443.7	323.1	466.7
7.21	10.99	0.73	0.0	0.70	0.0	0.00	0.00	0.50	1.00	1.00	-0.50	0.50	-0.50	0.50	33.52	-62.15	1443.2	323.7	466.7
7.12	10.99	0.72	0.0	0.70	0.0	0.00	0.00	0.50	1.00	1.00	-0.50	0.50	-0.50	0.50	33.65	-62.64	1442.7	324.3	466.7
7.03	10.99	0.71	0.0	0.70	0.0	0.00	0.00	0.50	1.00	1.00	-0.50	0.50	-0.50	0.50	33.78	-63.14	1442.2	324.9	466.7
6.94	10.99	0.69	0.0	0.70	0.0	0.00	0.00	0.50	1.00	1.00	-0.50	0.50	-0.50	0.50	33.91	-63.63	1441.7	325.6	466.7
6.85	10.99	0.68	0.0	0.70	0.0	0.00	0.00	0.50	1.00	1.00	-0.50	0.50	-0.50	0.50	34.04	-64.13	1441.2	326.2	466.7
6.76	10.99	0.67	0.0	0.70	0.0	0.00	0.00	0.50	1.00	1.00	-0.50	0.50	-0.50	0.50	34.17	-64.63	1440.7	326.8	466.7
6.67	10.99	0.66	0.0	0.70	0.0	0.00	0.00	0.50	1.00	1.00	-0.50	0.50	-0.50	0.50	34.30	-65.12	1440.2	327.4	466.7
6.58	10.99	0.65	0.0	0.70	0.0	0.00	0.00	0.50	1.00	1.00	-0.50	0.50	-0.50	0.50	34.43	-65.62	1439.7	328.1	466.7
6.49	10.99	0.64	0.0	0.70	0.0	0.00	0.00	0.50	1.00	1.00	-0.50	0.50	-0.50	0.50	34.56	-66.11	1439.2	328.7	466.7
6.40	10.99	0.63	0.0	0.70	0.0	0.00	0.00	0.50	1.00	1.00	-0.50	0.50	-0.50	0.50	34.69	-66.61	1438.7	329.3	466.7
6.31	10.99	0.62	0.0	0.70	0.0	0.00	0.00	0.50	1.00	1.00	-0.50	0.50	-0.50	0.50	34.82	-67.10	1438.2	329.9	466.7
6.22	10.99	0.61	0.0	0.70	0.0	0.00	0.00	0.50	1.00	1.00	-0.50	0.50	-0.50	0.50	34.95	-67.60	1437.7	330.6	466.7
6.13	10.99	0.60	0.0	0.70	0.0	0.00	0.00	0.50	1.00	1.00	-0.50	0.50	-0.50	0.50	35.08	-68.09	1437.2	331.2	466.7
6.04	10.99	0.59	0.0	0.70	0.0	0.00	0.00	0.50	1.00	1.00	-0.50	0.50	-0.50	0.50	35.21	-68.59	1436.7	331.8	466.7
5.95	10.99	0.58	0.0	0.70	0.0	0.00	0.00	0.50	1.00	1.00	-0.50	0.50	-0.50	0.50	35.34	-69.09	1436.2	332.4	466.7
5.86	10.99	0.57	0.0	0.70	0.0	0.00	0.00	0.50	1.00	1.00	-0.50	0.50	-0.50	0.50	35.47	-69.58	1435.7	333.1	466.7
5.77	10.99	0.56	0.0	0.70	0.0	0.00	0.00	0.50	1.00	1.00	-0.50	0.50	-0.50	0.50	35.60	-70.08	1435.3	333.7	466.7
5.68	10.99	0.55	0.0	0.70	0.0	0.00	0.00	0.50	1.00	1.00	-0.50	0.50	-0.50	0.50	35.73	-70.57	1434.8	334.3	466.7
5.59	10.99	0.54	0.0	0.70	0.0	0.00	0.00	0.50	1.00	1.00	-0.50	0.50	-0.50	0.50	35.86	-71.07	1434.3	335.0	466.7
5.50	10.99	0.53	0.0	0.70	0.0	0.00	0.00	0.50	1.00	1.00	-0.50	0.50	-0.50	0.50	35.99	-71.56	1433.8	335.6	466.7
5.41	10.99	0.52	0.0	0.70	0.0	0.00	0.00	0.50	1.00	1.00	-0.50	0.50	-0.50	0.50	36.12	-72.06	1433.3	336.2	466.7
5.32	10.99	0.50	0.0	0.70	0.0	0.00	0.00	0.50	1.00	1.00	-0.50	0.50	-0.50	0.50	36.25	-72.55	1432.8	336.8	466.7
5.23	10.99	0.49	0.0	0.70	0.0	0.00	0.00	0.50	1.00	1.00	-0.50	0.50	-0.50	0.50	36.38	-73.05	1432.3	337.5	466.7
5.14	10.99	0.48	0.0	0.70	0.0	0.00	0.00	0.50	1.00	1.00	-0.50	0.50	-0.50	0.50	36.51	-73.55	1431.8	338.1	466.7
5.05	10.99	0.47	0.0	0.70	0.0	0.00	0.00	0.50	1.00	1.00	-0.50	0.50	-0.50	0.50	36.64	-74.04	1431.3	338.7	466.7
4.96	10.99	0.46	0.0	0.70	0.0	0.00	0.00	0.50	1.00	1.00	-0.50	0.50	-0.50	0.50	36.77	-74.54	1430.8	339.3	466.7
4.87	10.99	0.45	0.0	0.70	0.0	0.00	0.00	0.50	1.00	1.00	-0.50	0.50	-0.50	0.50	36.90	-75.03	1430.3	340.0	466.7
4.78	10.99	0.44	0.0	0.70	0.0	0.00	0.00	0.50	1.00	1.00	-0.50	0.50	-0.50	0.50	37.03	-75.53	1429.8	340.6	466.7
4.69	10.99	0.43	0.0	0.70	0.0	0.00	0.00	0.50	1.00	1.00	-0.50	0.50	-0.50	0.50	37.16	-76.02	1429.3	341.2	466.7
4.60	10.99	0.42	0.0	0.70	0.0	0.00	0.00	0.50	1.00	1.00	-0.50	0.50	-0.50	0.50	37.29	-76.52	1428.8	341.8	466.7
4.51	10.99	0.41	0.0	0.70	0.0	0.00	0.00	0.50	1.00	1.00	-0.50	0.50	-0.50	0.50	37.42	-77.02	1428.3	342.5	466.7
4.42	10.99	0.40	0.0	0.70	0.0	0.00	0.00	0.50	1.00	1.00	0.00	0.00	0.00	0.00	37.55	-77.02	1428.3	342.6	466.7
4.33	10.99	0.39	0.0	0.70	0.0	0.00	0.00	0.50	1.00	1.00	0.00	0.00	0.00	0.00	37.68	-77.02	1428.3	342.7	466.7
4.24	10.99	0.39	0.0	0.70	0.0	0.00	0.00	0.50	1.00	1.00	0.00	0.00	0.00	0.00	37.81	-77.02	1428.3	342.9	466.7

4.15	10.99	0.38	0.0	0.70	0.0	0.00	0.00	0.50	1.00	1.00	0.00	0.00	0.00	0.00	37.94	-77.02	1428.3	343.0	466.7
4.06	10.99	0.37	0.0	0.70	0.0	0.00	0.00	0.50	1.00	1.00	0.00	0.00	0.00	0.00	38.07	-77.02	1428.3	343.1	466.7
3.97	10.99	0.36	0.0	0.70	0.0	0.00	0.00	0.50	1.00	1.00	0.00	0.00	0.00	0.00	38.20	-77.02	1428.3	343.2	466.7
3.88	10.99	0.35	0.0	0.70	0.0	0.00	0.00	0.50	1.00	1.00	0.00	0.00	0.00	0.00	38.33	-77.02	1428.3	343.4	466.7
3.79	10.99	0.34	0.0	0.70	0.0	0.00	0.00	0.50	1.00	1.00	0.00	0.00	0.00	0.00	38.46	-77.02	1428.3	343.5	466.7
3.70	10.99	0.34	0.0	0.70	0.0	0.00	0.00	0.50	1.00	1.00	0.00	0.00	0.00	0.00	38.59	-77.02	1428.3	343.6	466.7
3.61	10.99	0.33	0.0	0.70	0.0	0.00	0.00	0.50	1.00	1.00	0.00	0.00	0.00	0.00	38.72	-77.02	1428.3	343.8	466.7
3.52	10.99	0.32	0.0	0.70	0.0	0.00	0.00	0.50	1.00	1.00	0.00	0.00	0.00	0.00	38.85	-77.02	1428.3	343.9	466.7
3.43	10.99	0.31	0.0	0.70	0.0	0.00	0.00	0.50	1.00	1.00	0.00	0.00	0.00	0.00	38.98	-77.02	1428.3	344.0	466.7
3.34	10.99	0.30	0.0	0.70	0.0	0.00	0.00	0.50	1.00	1.00	0.00	0.00	0.00	0.00	39.11	-77.02	1428.3	344.2	466.7
3.25	10.99	0.30	0.0	0.70	0.0	0.00	0.00	0.50	1.00	1.00	0.00	0.00	0.00	0.00	39.24	-77.02	1428.3	344.3	466.7
3.16	10.99	0.29	0.0	0.70	0.0	0.00	0.00	0.50	1.00	1.00	0.00	0.00	0.00	0.00	39.37	-77.02	1428.3	344.4	466.7
3.07	10.99	0.28	0.0	0.70	0.0	0.00	0.00	0.50	1.00	1.00	0.00	0.00	0.00	0.00	39.50	-77.02	1428.3	344.5	466.7
2.98	10.99	0.27	0.0	0.70	0.0	0.00	0.00	0.50	1.00	1.00	0.00	0.00	0.00	0.00	39.63	-77.02	1428.3	344.7	466.7
2.89	10.99	0.26	0.0	0.70	0.0	0.00	0.00	0.50	1.00	1.00	0.00	0.00	0.00	0.00	39.76	-77.02	1428.3	344.8	466.7
2.80	10.99	0.26	0.0	0.70	0.0	0.00	0.00	0.50	1.00	1.00	0.00	0.00	0.00	0.00	39.90	-77.02	1428.3	344.9	466.7
2.71	10.99	0.25	0.0	0.70	0.0	0.00	0.00	0.50	1.00	1.00	0.00	0.00	0.00	0.00	40.03	-77.02	1428.3	345.1	466.7
2.62	10.99	0.24	0.0	0.70	0.0	0.00	0.00	0.50	1.00	1.00	0.00	0.00	0.00	0.00	40.16	-77.02	1428.3	345.2	466.7
2.53	10.99	0.23	0.0	0.70	0.0	0.00	0.00	0.50	1.00	1.00	0.00	0.00	0.00	0.00	40.29	-77.02	1428.3	345.3	466.7
2.43	10.99	0.22	0.0	0.70	0.0	0.00	0.00	0.50	1.00	1.00	0.00	0.00	0.00	0.00	40.42	-77.02	1428.3	345.5	466.7
2.34	10.99	0.22	0.0	0.70	0.0	0.00	0.00	0.50	1.00	1.00	0.00	0.00	0.00	0.00	40.55	-77.02	1428.3	345.6	466.7
2.25	10.99	0.21	0.0	0.70	0.0	0.00	0.00	0.50	1.00	1.00	0.00	0.00	0.00	0.00	40.68	-77.02	1428.3	345.7	466.7
2.16	10.99	0.20	0.0	0.70	0.0	0.00	0.00	0.50	1.00	1.00	0.00	0.00	0.00	0.00	40.81	-77.02	1428.3	345.8	466.7
2.07	10.99	0.19	0.0	0.70	0.0	0.00	0.00	0.50	1.00	1.00	0.00	0.00	0.00	0.00	40.94	-77.02	1428.3	346.0	466.7
1.98	10.99	0.18	0.0	0.70	0.0	0.00	0.00	0.50	1.00	1.00	0.00	0.00	0.00	0.00	41.07	-77.02	1428.3	346.1	466.7
1.89	10.99	0.17	0.0	0.70	0.0	0.00	0.00	0.50	1.00	1.00	0.00	0.00	0.00	0.00	41.20	-77.02	1428.3	346.2	466.7
1.80	10.99	0.17	0.0	0.70	0.0	0.00	0.00	0.50	1.00	1.00	0.00	0.00	0.00	0.00	41.33	-77.02	1428.3	346.4	466.7
1.71	10.99	0.16	0.0	0.70	0.0	0.00	0.00	0.50	1.00	1.00	0.00	0.00	0.00	0.00	41.46	-77.02	1428.3	346.5	466.7
1.62	10.99	0.15	0.0	0.70	0.0	0.00	0.00	0.50	1.00	1.00	0.00	0.00	0.00	0.00	41.59	-77.02	1428.3	346.6	466.7
1.53	10.99	0.14	0.0	0.70	0.0	0.00	0.00	0.50	1.00	1.00	0.00	0.00	0.00	0.00	41.72	-77.02	1428.3	346.8	466.7
1.44	10.99	0.13	0.0	0.70	0.0	0.00	0.00	0.50	1.00	1.00	0.00	0.00	0.00	0.00	41.85	-77.02	1428.3	346.9	466.7
1.35	10.99	0.13	0.0	0.70	0.0	0.00	0.00	0.50	1.00	1.00	0.00	0.00	0.00	0.00	41.98	-77.02	1428.3	347.0	466.7
1.26	10.99	0.12	0.0	0.70	0.0	0.00	0.00	0.50	1.00	1.00	0.00	0.00	0.00	0.00	42.11	-77.02	1428.3	347.1	466.7
1.17	10.99	0.11	0.0	0.70	0.0	0.00	0.00	0.50	1.00	1.00	0.00	0.00	0.00	0.00	42.24	-77.02	1428.3	347.3	466.7
1.08	10.99	0.10	0.0	0.70	0.0	0.00	0.00	0.50	1.00	1.00	0.00	0.00	0.00	0.00	42.37	-77.02	1428.3	347.4	466.7
0.99	10.99	0.09	0.0	0.70	0.0	0.00	0.00	0.50	1.00	1.00	0.00	0.00	0.00	0.00	42.50	-77.02	1428.3	347.5	466.7
0.90	10.99	0.09	0.0	0.70	0.0	0.00	0.00	0.50	1.00	1.00	0.00	0.00	0.00	0.00	42.63	-77.02	1428.3	347.7	466.7
0.81	10.99	0.08	0.0	0.70	0.0	0.00	0.00	0.50	1.00	1.00	0.00	0.00	0.00	0.00	42.76	-77.02	1428.3	347.8	466.7
0.72	10.99	0.07	0.0	0.70	0.0	0.00	0.00	0.50	1.00	1.00	0.00	0.00	0.00	0.00	42.89	-77.02	1428.3	347.9	466.7
0.63	10.99	0.06	0.0	0.70	0.0	0.00	0.00	0.50	1.00	1.00	0.00	0.00	0.00	0.00	43.02	-77.02	1428.3	348.1	466.7
0.54	10.99	0.05	0.0	0.70	0.0	0.00	0.00	0.50	1.00	1.00	0.00	0.00	0.00	0.00	43.15	-77.02	1428.3	348.2	466.7
0.45	10.99	0.04	0.0	0.70	0.0	0.00	0.00	0.50	1.00	1.00	0.00	0.00	0.00	0.00	43.28	-77.02	1428.3	348.3	466.7
0.36	10.99	0.04	0.0	0.70	0.0	0.00	0.00	0.50	1.00	1.00	0.00	0.00	0.00	0.00	43.41	-77.02	1428.3	348.4	466.7
0.27	10.99	0.03	0.0	0.70	0.0	0.00	0.00	0.50	1.00	1.00	0.00	0.00	0.00	0.00	43.54	-77.02	1428.3	348.6	466.7
0.18	10.99	0.02	0.0	0.70	0.0	0.00	0.00	0.50	1.00	1.00	0.00	0.00	0.00	0.00	43.67	-77.02	1428.3	348.7	466.7
0.09	10.99	0.01	0.0	0.70	0.0	0.00	0.00	0.50	1.00	1.00	0.00	0.00	0.00	0.00	43.80	-77.02	1428.3	348.8	466.7
0.00	10.99	0.00	0.0	0.70	0.0	0.00	0.00	0.50	1.00	1.00	0.00	0.00	0.00	0.00	43.93	-77.02	1428.3	349.0	466.7

SETTLEMENT based on Ultimate Loading by Vesic Method (1977):
Ztip=45.00 Btip= 3.50 Cp= 0.135 Cs= 0.203
Xpp=4.453-in Xps= 0.099-in Xtip= 4.552-in
Cp & Cs are average value at bearing stratum from pile tip extend to 4 Btip

At loading: Qtip=1199.8-kp Qtop= 1428.3-kp Qside= 228.5-kp
Xtip=4.552-in Xtop= 4.735-in Xshaft= 0.183-in

LOAD - TOTAL SETTLEMENT RELATION (from t-z, and q-w curves):
Based on Vesic Method (1977)

Xtop -in	Xshaft -in	Xtip -in	Qtip -kp	Qside -kp	Qtotal -kp
0.0002	0.0002	0.0000	1.6	0.5	2.1
0.0302	0.0050	0.0252	18.9	38.8	57.6
0.0597	0.0094	0.0504	36.2	71.6	107.8
0.0890	0.0134	0.0756	53.5	99.7	153.1
0.1180	0.0172	0.1007	70.8	123.5	194.2
0.1467	0.0208	0.1259	88.1	143.5	231.6
0.1752	0.0241	0.1511	105.4	160.3	265.7
0.2036	0.0273	0.1763	122.6	174.3	296.9
0.2317	0.0302	0.2015	139.8	185.8	325.6
0.2598	0.0331	0.2267	156.9	195.3	352.2
0.2877	0.0358	0.2519	173.9	203.0	376.9
0.3154	0.0384	0.2771	190.9	209.1	400.1
0.3431	0.0409	0.3022	207.8	214.1	421.8
0.3708	0.0433	0.3274	224.5	217.9	442.4
0.3983	0.0457	0.3526	241.1	220.9	462.0
0.4258	0.0480	0.3778	257.6	223.2	480.8
0.4532	0.0502	0.4030	274.0	224.9	498.9
0.4806	0.0524	0.4282	290.3	226.2	516.4
0.5079	0.0546	0.4534	306.3	227.1	533.4
0.5352	0.0567	0.4785	322.3	227.7	550.0
0.5625	0.0587	0.5037	338.0	228.1	566.2
0.5897	0.0608	0.5289	353.6	228.4	582.0
0.6169	0.0628	0.5541	369.1	228.5	597.6
0.6441	0.0648	0.5793	384.3	228.5	612.8
0.6712	0.0667	0.6045	399.4	228.4	627.8
0.6983	0.0687	0.6297	414.3	228.3	642.6
0.7254	0.0706	0.6549	429.0	228.1	657.1
0.7525	0.0724	0.6800	443.5	227.8	671.4
0.7795	0.0743	0.7052	457.9	227.5	685.4
0.8065	0.0761	0.7304	472.0	227.1	699.1
0.8335	0.0779	0.7556	485.9	226.7	712.6
0.8604	0.0796	0.7808	499.7	226.2	725.9
0.8873	0.0813	0.8060	513.2	225.7	738.9
0.9142	0.0830	0.8312	526.5	225.2	751.7
0.9411	0.0847	0.8564	539.6	224.6	764.3
0.9679	0.0863	0.8815	552.6	224.1	776.6
0.9947	0.0880	0.9067	565.3	223.6	788.8
1.0215	0.0896	0.9319	577.8	223.1	800.9
1.0483	0.0912	0.9571	590.1	223.2	813.3
1.0750	0.0927	0.9823	602.2	223.0	825.2
1.1017	0.0943	1.0075	614.1	222.7	836.8
1.1284	0.0958	1.0327	625.8	222.4	848.2
1.1551	0.0972	1.0578	637.3	222.1	859.3
1.1817	0.0987	1.0830	648.6	221.7	870.2
1.2083	0.1001	1.1082	659.7	221.2	880.9
1.2349	0.1015	1.1334	670.6	220.7	891.3
1.2614	0.1028	1.1586	681.3	220.2	901.5
1.2879	0.1041	1.1838	691.8	219.6	911.4
1.3144	0.1054	1.2090	702.1	219.0	921.1
1.3409	0.1067	1.2342	712.2	218.3	930.6
1.3673	0.1080	1.2593	722.2	217.6	939.8
1.3937	0.1092	1.2845	731.9	216.9	948.9
1.4201	0.1104	1.3097	741.5	216.2	957.7
1.4465	0.1116	1.3349	750.9	215.5	966.4
1.4728	0.1127	1.3601	760.1	214.8	974.9
1.4991	0.1138	1.3853	769.2	214.0	983.2

1.5254	0.1149	1.4105	778.1	213.3	991.4
1.5517	0.1160	1.4356	786.8	212.7	999.4
1.5779	0.1171	1.4608	795.3	212.0	1007.3
1.6042	0.1182	1.4860	803.7	211.4	1015.1
1.6304	0.1192	1.5112	811.9	210.8	1022.7
1.6566	0.1202	1.5364	820.0	210.3	1030.3
1.6828	0.1212	1.5616	827.9	209.8	1037.7
1.7089	0.1222	1.5868	835.7	209.4	1045.1
1.7351	0.1231	1.6120	843.3	209.0	1052.3
1.7612	0.1241	1.6371	850.8	208.7	1059.5
1.7874	0.1250	1.6623	858.2	208.4	1066.5
1.8135	0.1260	1.6875	865.4	208.1	1073.4
1.8396	0.1269	1.7127	872.5	207.8	1080.2
1.8656	0.1277	1.7379	879.4	207.4	1086.8
1.8917	0.1286	1.7631	886.2	207.0	1093.3
1.9177	0.1294	1.7883	893.0	206.5	1099.5
1.9437	0.1303	1.8134	899.6	205.9	1105.4
1.9697	0.1310	1.8386	906.0	205.1	1111.1
1.9956	0.1318	1.8638	912.4	204.0	1116.4
2.0215	0.1325	1.8890	918.7	202.6	1121.2
2.0476	0.1334	1.9142	924.8	203.5	1128.4
2.0735	0.1342	1.9394	930.9	203.3	1134.2
2.0995	0.1349	1.9646	936.8	203.1	1139.9
2.1254	0.1357	1.9898	942.7	202.9	1145.6
2.1513	0.1364	2.0149	948.5	202.7	1151.2
2.1773	0.1371	2.0401	954.2	202.5	1156.6
2.2032	0.1378	2.0653	959.8	202.2	1162.0
2.2290	0.1385	2.0905	965.3	202.0	1167.3
2.2549	0.1392	2.1157	970.7	201.8	1172.5
2.2808	0.1399	2.1409	976.1	201.6	1177.7
2.3066	0.1406	2.1661	981.3	201.4	1182.7
2.3325	0.1412	2.1912	986.5	201.2	1187.7
2.3583	0.1419	2.2164	991.7	201.0	1192.6
2.3842	0.1425	2.2416	996.7	200.7	1197.5
2.4100	0.1432	2.2668	1001.7	200.5	1202.3
2.4358	0.1438	2.2920	1006.7	200.3	1207.0
2.4616	0.1444	2.3172	1011.6	200.1	1211.7
2.4874	0.1450	2.3424	1016.4	199.9	1216.3
2.5132	0.1456	2.3676	1021.1	199.7	1220.8
2.9968	0.1558	2.8411	1101.1	195.6	1296.7
3.4782	0.1636	3.3146	1163.6	191.6	1355.2
3.9562	0.1681	3.7881	1199.8	187.6	1387.4
4.4288	0.1672	4.2616	1194.8	183.5	1378.4
4.8950	0.1599	4.7351	1140.9	179.5	1320.5

At Qwork= 430.00-kp Settlement= 0.35411-in
At Qwork= 430.00-kp Secant Stiffness Kqx= 1214.31-kp/-in
At Xallow= 1.00-in Q= 791.24-kp
Note: If the program cannot find a result or the result exceeds the upper limit. The result will be displayed as 99999.

SUMMARY:

Total Ultimate Capacity (Down)= 1428.314-kp Total Ultimate Capacity (Up)= 348.966-kp
Total Allowable Capacity (Down)= 514.187-kp Total Allowable Capacity (Up)= 196.448-kp

Weight above Ground= 0.00 Total Pile Weight= 43.93-kp *Soil Weight is not included
Side Resistance (Down)= 228.497-kp Side Resistance (Up)= 305.037-kp
Tip Resistance (Down)= 1199.816-kp Tip Resistance (Up)= 0.000-kp
Negative Friction, Qneg= -77.015-kp, which has been subtracted from Total Ultimate Capacity (Down)
Negative friction does not affect Total Uplift Ultimate Capacity (Up)

OK! Qallow > Q * Vertical Load, Q= 430.0 -kp

FACTOR OF SAFETY:

FSside	FStip	FSup	FSweight
2.0	3.0	2.0	1.0

* FStorsion = FSside

Notes:
* Settlement in the program is Elastic Settlement only. Consolidation Settlement is not calculated!
Length - Pile length, distance from pile top to tip (not from ground surface)
Width or D - Width of pile shaft (pile diameter)
Ds and Dl - Short Side and Long Side of Footing
Area - Section area of pile shaft or tip area of pile
Sv - Vertical stress in soils (It may be limited based on critical depth, Z_lim or Z/D
qult - Ultimate tip resistance (pressure)
Qtip_dw - Ultimate downward tip resistance (Force or Capacity)
Qtip_up - Ultimate uplift tip resistance for belled pile or uplift plate (Force or Capacity)
Torsion - Ultimate torsion resistance for single pile (Capacity)
dz - Small Segment of Depth for Calculation
Zs - Soil Depth, Depth from ground surface
Zp - Pile Depth, Depth from pile top
Prem - Primer of pile shaft
Phi - Soil internal friction angle (between soils)
Kf - Friction factor to convert Phi to Delta
Delta - Ski friction between soil and pile (function of Phi. It is different from Phi)
f_dw - Downward Resistance between soil and pile from Delta
f_up - Uplift Resistance between soil and pile from Delta
C - Soil cohesion (between soils)
Ca - Adhesion between soil and pile (function of C. It is different from C) Ca=KaKcC
Ka - Adhesion ratio, C/Ca
Kc - Adhesion factor defended by users
Ca_dw - Downward adhesion between pile and soil
Ca_up - Uplift adhesion between pile and soil
Sf_dw - Downward side resistance (sum of friction and adhesion, f_dw + Ca_dw)
Sf_up - Uplift side resistance (sum of friction and adhesion, f_up + Ca_up)
Torsion side resistance = (Sf_dw+Sf_up)/2 * pile diameter/2
Weight - Weight of Pile shaft
Qneg - negative friction Resistance
Qside - Ultimate side resistance (Qside_dw or Qside_up)
Qtip - Ultimate tip resistance (Qtip_dw or Qtip_up for uplift plate)
Q_dw - Ultimate downward capacity (Qtip + Qside_dw)
Q_up - Ultimate uplift capacity (Weight + Qside_up)
E - Elastic modules
Xs - Settlement due to axial deformation of pile shaft
Xpp - Settlement due to point load from pile tip
Xps- Settlement due to load from pile shaft
Xtop - Total settlement, Xs + Xpp + Xps
Xtip - Tip settlement, Xpp + Xps
Xshaft - Shaft deformation, Xs
Xallow - Allowable settlement specified by users
Qwork - Vertical working load applied to pile
Qallow - Vertical allowable load, Qult/F.S.

VERTICAL ANALYSIS

Figure 1

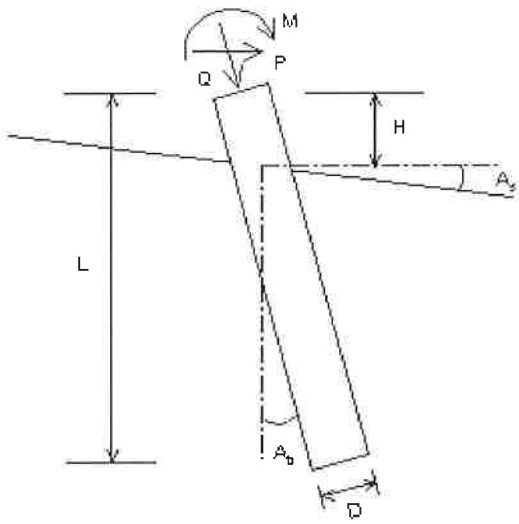

Drilled Shaft (dia >24 in. or 61 cm)

Loads:
Load Factor for Vertical Loads= 1.0
Load Factor for Lateral Loads= 1.0
Loads Supported by Pile Cap= 0 %
Shear Condition: Static

(with Load Factor)
Vertical Load, Q= 512.0 -kp

Profile:
Pile Length, L= 50.0 -ft
Top Height, H= 0 -ft
Slope Angle, As= 0
Batter Angle, Ab= 0

* Zero Friction *
Zero Friction Start: 0 -ft End: 4.5 -ft
* Negative Friction *
Negative Friction Start: 4.5 -ft End: 19.5 -ft with Factor: 1

Soil Data:

Depth -ft	Gamma -lb/f3	Phi	C -kp/f2	K -lb/i3	e50 or Dr %	Nspt
0	90.0	0.0	0.500	313.1	0.87	10
4.5	117.0	0.0	0.50	103.7	1.30	5
10	117.0	0.0	0.500	136.8	1.19	6
12	52.6	32.0	0.00	32.9	35.04	10
19.5	56.8	32.0	0.00	50.8	45.73	15
22	70.4	32.0	0.500	867.8	0.56	21
27	60.4	35.0	0.00	90.0	63.67	28
32	70.2	0.0	1.500	814.1	0.57	20
40	60.7	37.0	0.00	97.3	66.49	31
42.5	66.4	37.0	0.00	148.9	83.39	48

Pile Data:

Depth -ft	Width -in	Area -in2	Per. -in	I -in4	E -kp/i2	Weight -kp/f
0.0	42	1385.4	131.9	152745.0	3000	1.443
50.0						

Vertical Capacity:
Weight above Ground= 0.00 Total Weight= 48.15-kp *Soil Weight is not included
Side Resistance (Down)= 294.106-kp Side Resistance (Up)= 341.839-kp
Tip Resistance (Down)= 1316.860-kp Tip Resistance (Up)= 0.000-kp
Total Ultimate Capacity (Down) Qult= 1610.966-kp Total Ultimate Capacity (Up)= 389.987-kp
Total Allowable Capacity (Down) Qallow= 586.006-kp Total Allowable Capacity (Up) Qallow= 219.068-kp
OK! Qallow > Q

Settlement Calculation:
At Q= 512.00-kp Settlement= 0.36585-in
At Xallow= 1.00-in Q= 892.96033-kp

Note: If the program cannot find a result or the result exceeds the upper limit. The result will be displayed as 99999.

ALLOWABLE CAPACITY vs FOUNDATION DEPTH

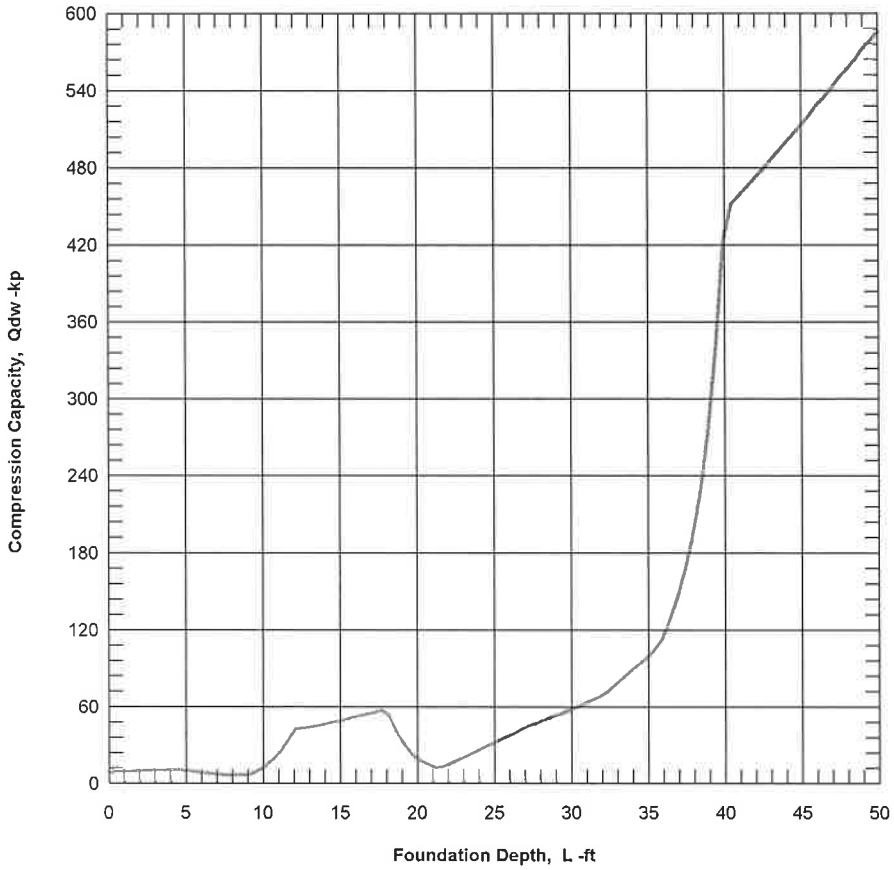

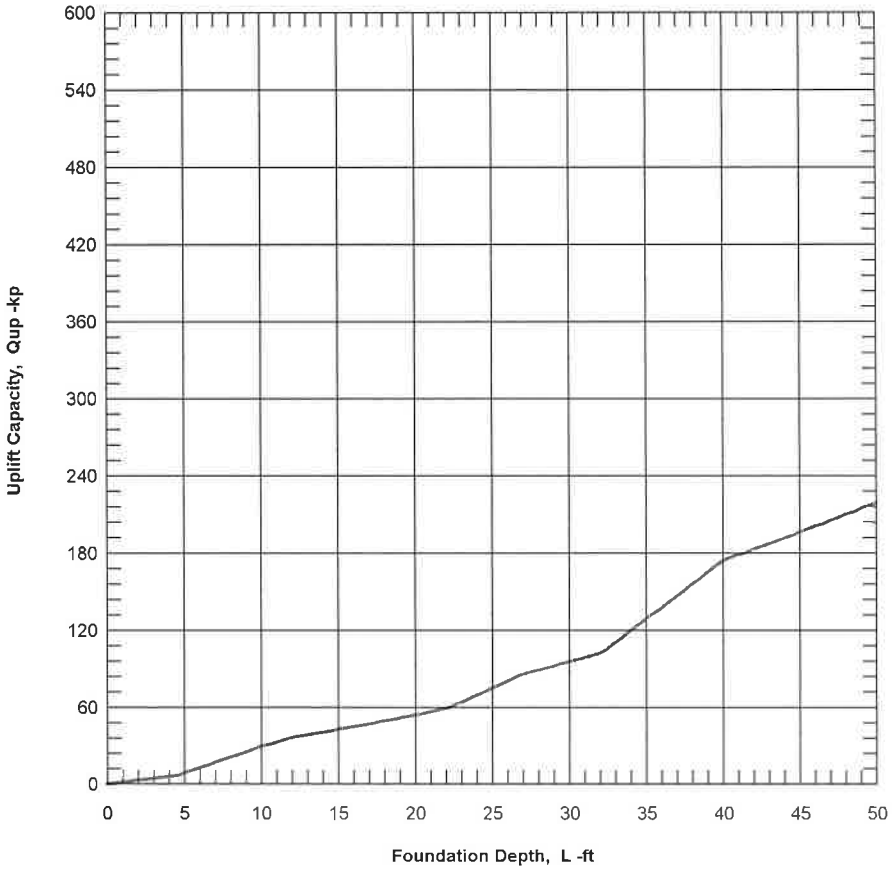

CivilTech Software

16G136 - 42-in-dia Drilled Pier
50-ft-deep; Using B-4 and B-3 data

Figure 1

```
*************************************************************
                ALLPILE 7
      VERTICAL ANALYSIS DETAILED OUTPUT
       Copyright by CivilTech Software
              www.civiltech.com
*************************************************************
Licensed to
Date: 7/8/2019  File: P:\Geotechnical\2016 Geotechnical\16G136 Alston 2 CI Bldgs Long Beach\Deep Foundation Design\Apr 28 2016\Boring B-4 and B-3\42india_50ftdeep_drilled_01.alp
1.0

Title 1: 16G136 - 42-in-dia Drilled Pier
Title 2: 50-ft-deep; Using B-4 and B-3 data

ALLPILE INPUT DATA:
**_____________________________________________________**

* Pile Type Page *
Unit: English
Diameter more than 24in (61cm).  For bell section, select "Belled" in Diameter Variation of Pile Section Screen. Recommendation: 2 to 4 in Item 3 of Page F.
Pile Type: Drilled Shaft (dia >24 in. or 61 cm)

* Pile Profile *
Foundation Depth: 50.0 -ft
Top Height: 0 -ft
Slope Angle: 0
Pile Angle: 0

* Pile Properties *
Zs      Width   Area    Perim.     I       E      Weight  Mix     Out     In      Other.  Type
-ft     -in     -in2    -in      -in4    -kp/i2   -kp/f   %       Side    Side    Par.
_____________________________________________________________________________________________
0.0     42      1385.4  131.9   152745.0         3000    1.443   0.0     4       4       0       Concrete (smooth)
50.0                                                                                             Pile Tip
Note:  Mix = % of Inside material/Outside material

Group Type: 0
Top Type: 1

Water Table: 10 -ft
Ground Elevation: 0 -ft

* Soil Properties *
Zs      Gamma   Phi     C       K       E50/Dr  Nspt    Type    Soil
-ft     -lb/f3  o       -kp/f2  -lb/i3   - %
0.0     90.0    0.0     0.500   313.1   0.87    10      3       Fill
4.5     117.0   0.0     0.50    103.7   1.30    5       1       Alluvium
10.0    117.0   0.0     0.500   136.8   1.19    6       1       Alluvium
12.0    52.6    32.0    0.00    32.9    35.04   10      4       Alluvium
19.5    56.8    32.0    0.00    50.8    45.73   15      4       Alluvium
22.0    70.4    32.0    0.500   867.8   0.56    21      3       Alluvium
27.0    60.4    35.0    0.00    90.0    63.67   28      4       Alluvium
32.0    70.2    0.0     1.500   814.1   0.57    20      2       Alluvium
40.0    60.7    37.0    0.00    97.3    66.49   31      4       Alluvium
42.5    66.4    37.0    0.00    148.9   83.39   48      4       Alluvium

Surcharge Pressure on ground: 0 -kp/f2

* Zero Friction *
Zero Friction Start: 0 -ft      End: 4.5 -ft

* Negative Friction *
Negative Friction Start: 4.5 -ft        End: 19.5 -ft   with Factor: 1

ALLPILE ANALYSIS AND RESULTS:
**_____________________________________________________**

Pile Profile and Loading:
        Piletype: Drilled Shaft (dia >24 in. or 61 cm)
        Pile Length, L= 50.0 -ft
        Top Height, H= 0 -ft
        Slope Angle, As= 0
        Batter Angle, Ab= 0.00

        *To consider the influence of different soils below the pile tip, bearing stratum is defined
        from pile tip extending to 4 Diameter of pile, which is 14.0-ft (Input Page F, Item 3)

Single Pile, Vertical Analysis:
        Vertical Load with Load factor, Q= 512.0 -kp
        Vertical Load with Load factor and Pile Cap, Q= 512.0 -kp
          Load Factor for Vertical Loads= 1.0
          Vertical Loads Supported by Pile Cap: 0 %
          Kdown= 0.7      Kup= 0.4        Ka= 1.00


From Ztip=50.0 to 64.0-ft  Average Properties: Es= 767.92-kp/f2  C=0.00-kp/f2  Friction=37.00 Cp=0.14  Ksand=1.00
Limits of Max. tip resistance, q_lim= N/A
Batter Angle, Ab= 0.00    Batter Factor, Kbat= 1.00
Qtip_dw=1316.9-kp  based on qult=136.9-kp/f2  and Base Area=9.6-ft2
Qtip_up=0.0-kp  and Base Area=0.0-ft2


TIP RESISTANCE (Down) CALCULATION:
Tip Depth= 50.0-ft Critical Depth Ratio Z/D= 20 Critical Depth= 70.0-ft
Equivalent Width of Tip= 3.50-ft,   Tip Area= 9.62-ft2   Tip Diameter= 3.50-ft
Bearing stratum from pile tip extending to 4 Diameter of pile. Bearing stratum= 14.00-ft
Btip: width at pile tip= 3.50-ft (For group pile, it is equivalent width).
Phi & C are average value in bearing stratum.
Batter Angle= 0.00,    Batter Factor for Tip and Side= 1.00

Ztip    Z/D     Z_lim   q_lim   Width   Area'   Phi     C       Nq      Nc      Sv      qult    Qtip_dw
-ft             -ft     -kp/f2  -ft     -ft2    - o     -kp/f2                  -kp/f2  -kp/f2  -kp
_____________________________________________________________________________________________
50.0    20.0    70.0    N/A     3.50    9.62    37.0    0.00    37.1    9.0     3.7     136.9   1316.9

 Ztip - Depth of pile tip from ground surface (Zs)
 D - Pile average diameter (below ground) for calculation of critical depth.  D=3.50-ft
 Z/D - Critical depth (for tip resistances) as ratio of depth/diameter. Vertical stress will be constant below critical depth
 Z_lim - Critical depth, calculated from Z/D (for tip resistances)
 q_lim -  Limit of Maximum tip resistance
 Btip: width or diameter at pile tip
 Bearing stratum: A stratum from  pile tip extending to some depth. Average soil properties in the stratum are used for bearing calculation


SIDE RESISTANCE (Uplift & Down) CALCULATION:
D       Z/D     Z_lim   Sf_lim  K_dw    K_up    dz
-ft             -ft     -kp/f2                  -ft
_____________________________________________
```

3.50 20.0 70.00 N/A 0.7 0.4 0.100

D - Pile average diameter for calculation of critical depth
Z/D - Critical depth (for side resistances) as ratio of depth/diameter. Vertical stress will be constant below critical depth
Z_lim - Critical depth calculated from Z/D (for side resistances)
Sf_lim - Limit of Maximum side resistance

Users Setting: Ka=1, which is constant. Ca=KcKaC=KcC

SIDE RESISTANCE (Up & Down) CALCULATION vs DEPTH:
Calculation is based on segment dZ= 0.10

Zs -ft	Prem -ft	Sv -kp/f2	Phi - o	Kf(<2) Delta	Delta - o	f_dw -kp/f2	f_up -kp/f2	C -kp/f2	Ka	Kc(<2) Ca	Ca_dw -kp/f2	Ca_up -kp/f2	Sf_dw -kp/f2	Sf_up -kp/f2	Weight -kp	Qneg -kp	Q_dw -kp	Q_up -kp	Torsion -kp-f
50.00	10.99	3.69	37.0	0.70	25.9	1.25	0.72	0.00	1.00	1.00	0.00	0.00	0.00	0.00	0.00	0.00	1316.9	0.0	0.0
49.90	10.99	3.68	37.0	0.70	25.9	1.25	0.72	0.00	1.00	1.00	0.00	0.00	1.25	0.72	0.08	0.00	1318.2	0.9	1.9
49.80	10.99	3.68	37.0	0.70	25.9	1.25	0.71	0.00	1.00	1.00	0.00	0.00	1.25	0.71	0.17	0.00	1319.6	1.7	3.8
49.70	10.99	3.67	37.0	0.70	25.9	1.25	0.71	0.00	1.00	1.00	0.00	0.00	1.25	0.71	0.25	0.00	1321.0	2.6	5.7
49.60	10.99	3.66	37.0	0.70	25.9	1.25	0.71	0.00	1.00	1.00	0.00	0.00	1.25	0.71	0.34	0.00	1322.4	3.5	7.6
49.50	10.99	3.66	37.0	0.70	25.9	1.24	0.71	0.00	1.00	1.00	0.00	0.00	1.24	0.71	0.42	0.00	1323.7	4.3	9.4
49.40	10.99	3.65	37.0	0.70	25.9	1.24	0.71	0.00	1.00	1.00	0.00	0.00	1.24	0.71	0.51	0.00	1325.1	5.2	11.3
49.30	10.99	3.64	37.0	0.70	25.9	1.24	0.71	0.00	1.00	1.00	0.00	0.00	1.24	0.71	0.59	0.00	1326.5	6.1	13.2
49.20	10.99	3.64	37.0	0.70	25.9	1.24	0.71	0.00	1.00	1.00	0.00	0.00	1.24	0.71	0.68	0.00	1327.8	6.9	15.1
49.10	10.99	3.63	37.0	0.70	25.9	1.23	0.70	0.00	1.00	1.00	0.00	0.00	1.23	0.70	0.76	0.00	1329.2	7.8	16.9
49.00	10.99	3.62	37.0	0.70	25.9	1.23	0.70	0.00	1.00	1.00	0.00	0.00	1.23	0.70	0.84	0.00	1330.5	8.7	18.8
48.90	10.99	3.62	37.0	0.70	25.9	1.23	0.70	0.00	1.00	1.00	0.00	0.00	1.23	0.70	0.93	0.00	1331.9	9.5	20.7
48.80	10.99	3.61	37.0	0.70	25.9	1.23	0.70	0.00	1.00	1.00	0.00	0.00	1.23	0.70	1.01	0.00	1333.2	10.4	22.5
48.70	10.99	3.60	37.0	0.70	25.9	1.22	0.70	0.00	1.00	1.00	0.00	0.00	1.22	0.70	1.10	0.00	1334.6	11.2	24.4
48.60	10.99	3.60	37.0	0.70	25.9	1.22	0.70	0.00	1.00	1.00	0.00	0.00	1.22	0.70	1.18	0.00	1335.9	12.1	26.2
48.50	10.99	3.59	37.0	0.70	25.9	1.22	0.70	0.00	1.00	1.00	0.00	0.00	1.22	0.70	1.27	0.00	1337.3	12.9	28.1
48.40	10.99	3.58	37.0	0.70	25.9	1.22	0.70	0.00	1.00	1.00	0.00	0.00	1.22	0.70	1.35	0.00	1338.6	13.8	29.9
48.30	10.99	3.58	37.0	0.70	25.9	1.22	0.69	0.00	1.00	1.00	0.00	0.00	1.22	0.69	1.44	0.00	1340.0	14.6	31.8
48.20	10.99	3.57	37.0	0.70	25.9	1.21	0.69	0.00	1.00	1.00	0.00	0.00	1.21	0.69	1.52	0.00	1341.3	15.5	33.6
48.10	10.99	3.56	37.0	0.70	25.9	1.21	0.69	0.00	1.00	1.00	0.00	0.00	1.21	0.69	1.60	0.00	1342.6	16.3	35.4
48.00	10.99	3.56	37.0	0.70	25.9	1.21	0.69	0.00	1.00	1.00	0.00	0.00	1.21	0.69	1.69	0.00	1344.0	17.2	37.3
47.90	10.99	3.55	37.0	0.70	25.9	1.21	0.69	0.00	1.00	1.00	0.00	0.00	1.21	0.69	1.77	0.00	1345.3	18.0	39.1
47.80	10.99	3.54	37.0	0.70	25.9	1.20	0.69	0.00	1.00	1.00	0.00	0.00	1.20	0.69	1.86	0.00	1346.6	18.9	40.9
47.70	10.99	3.54	37.0	0.70	25.9	1.20	0.69	0.00	1.00	1.00	0.00	0.00	1.20	0.69	1.94	0.00	1347.9	19.7	42.7
47.60	10.99	3.53	37.0	0.70	25.9	1.20	0.69	0.00	1.00	1.00	0.00	0.00	1.20	0.69	2.03	0.00	1349.3	20.5	44.5
47.49	10.99	3.52	37.0	0.70	25.9	1.20	0.68	0.00	1.00	1.00	0.00	0.00	1.20	0.68	2.11	0.00	1350.6	21.4	46.4
47.39	10.99	3.52	37.0	0.70	25.9	1.20	0.68	0.00	1.00	1.00	0.00	0.00	1.20	0.68	2.20	0.00	1351.9	22.2	48.2
47.29	10.99	3.51	37.0	0.70	25.9	1.19	0.68	0.00	1.00	1.00	0.00	0.00	1.19	0.68	2.28	0.00	1353.2	23.1	50.0
47.19	10.99	3.50	37.0	0.70	25.9	1.19	0.68	0.00	1.00	1.00	0.00	0.00	1.19	0.68	2.36	0.00	1354.5	23.9	51.8
47.09	10.99	3.50	37.0	0.70	25.9	1.19	0.68	0.00	1.00	1.00	0.00	0.00	1.19	0.68	2.45	0.00	1355.8	24.7	53.6
46.99	10.99	3.49	37.0	0.70	25.9	1.19	0.68	0.00	1.00	1.00	0.00	0.00	1.19	0.68	2.53	0.00	1357.1	25.5	55.4
46.89	10.99	3.48	37.0	0.70	25.9	1.18	0.68	0.00	1.00	1.00	0.00	0.00	1.18	0.68	2.62	0.00	1358.4	26.4	57.2
46.79	10.99	3.48	37.0	0.70	25.9	1.18	0.68	0.00	1.00	1.00	0.00	0.00	1.18	0.68	2.70	0.00	1359.7	27.2	58.9
46.69	10.99	3.47	37.0	0.70	25.9	1.18	0.67	0.00	1.00	1.00	0.00	0.00	1.18	0.67	2.79	0.00	1361.0	28.0	60.7
46.59	10.99	3.46	37.0	0.70	25.9	1.18	0.67	0.00	1.00	1.00	0.00	0.00	1.18	0.67	2.87	0.00	1362.3	28.9	62.5
46.49	10.99	3.46	37.0	0.70	25.9	1.17	0.67	0.00	1.00	1.00	0.00	0.00	1.17	0.67	2.96	0.00	1363.6	29.7	64.3
46.39	10.99	3.45	37.0	0.70	25.9	1.17	0.67	0.00	1.00	1.00	0.00	0.00	1.17	0.67	3.04	0.00	1364.9	30.5	66.1
46.29	10.99	3.44	37.0	0.70	25.9	1.17	0.67	0.00	1.00	1.00	0.00	0.00	1.17	0.67	3.12	0.00	1366.2	31.3	67.8
46.19	10.99	3.44	37.0	0.70	25.9	1.17	0.67	0.00	1.00	1.00	0.00	0.00	1.17	0.67	3.21	0.00	1367.5	32.1	69.6
46.09	10.99	3.43	37.0	0.70	25.9	1.17	0.67	0.00	1.00	1.00	0.00	0.00	1.17	0.67	3.29	0.00	1368.8	33.0	71.4
45.99	10.99	3.42	37.0	0.70	25.9	1.16	0.66	0.00	1.00	1.00	0.00	0.00	1.16	0.66	3.38	0.00	1370.1	33.8	73.1
45.89	10.99	3.42	37.0	0.70	25.9	1.16	0.66	0.00	1.00	1.00	0.00	0.00	1.16	0.66	3.46	0.00	1371.3	34.6	74.9
45.79	10.99	3.41	37.0	0.70	25.9	1.16	0.66	0.00	1.00	1.00	0.00	0.00	1.16	0.66	3.55	0.00	1372.6	35.4	76.6
45.69	10.99	3.40	37.0	0.70	25.9	1.16	0.66	0.00	1.00	1.00	0.00	0.00	1.16	0.66	3.63	0.00	1373.9	36.2	78.4
45.59	10.99	3.40	37.0	0.70	25.9	1.15	0.66	0.00	1.00	1.00	0.00	0.00	1.15	0.66	3.72	0.00	1375.2	37.0	80.1
45.49	10.99	3.39	37.0	0.70	25.9	1.15	0.66	0.00	1.00	1.00	0.00	0.00	1.15	0.66	3.80	0.00	1376.4	37.8	81.9
45.39	10.99	3.38	37.0	0.70	25.9	1.15	0.66	0.00	1.00	1.00	0.00	0.00	1.15	0.66	3.88	0.00	1377.7	38.7	83.6
45.29	10.99	3.38	37.0	0.70	25.9	1.15	0.66	0.00	1.00	1.00	0.00	0.00	1.15	0.66	3.97	0.00	1379.0	39.5	85.4
45.19	10.99	3.37	37.0	0.70	25.9	1.15	0.65	0.00	1.00	1.00	0.00	0.00	1.15	0.65	4.05	0.00	1380.2	40.3	87.1
45.09	10.99	3.36	37.0	0.70	25.9	1.14	0.65	0.00	1.00	1.00	0.00	0.00	1.14	0.65	4.14	0.00	1381.5	41.1	88.8
44.99	10.99	3.36	37.0	0.70	25.9	1.14	0.65	0.00	1.00	1.00	0.00	0.00	1.14	0.65	4.22	0.00	1382.7	41.9	90.6
44.89	10.99	3.35	37.0	0.70	25.9	1.14	0.65	0.00	1.00	1.00	0.00	0.00	1.14	0.65	4.31	0.00	1384.0	42.7	92.3
44.79	10.99	3.34	37.0	0.70	25.9	1.14	0.65	0.00	1.00	1.00	0.00	0.00	1.14	0.65	4.39	0.00	1385.3	43.5	94.0
44.69	10.99	3.34	37.0	0.70	25.9	1.13	0.65	0.00	1.00	1.00	0.00	0.00	1.13	0.65	4.48	0.00	1386.5	44.3	95.7
44.59	10.99	3.33	37.0	0.70	25.9	1.13	0.65	0.00	1.00	1.00	0.00	0.00	1.13	0.65	4.56	0.00	1387.7	45.1	97.4
44.49	10.99	3.32	37.0	0.70	25.9	1.13	0.65	0.00	1.00	1.00	0.00	0.00	1.13	0.65	4.64	0.00	1389.0	45.9	99.1
44.39	10.99	3.32	37.0	0.70	25.9	1.13	0.64	0.00	1.00	1.00	0.00	0.00	1.13	0.64	4.73	0.00	1390.2	46.7	100.9
44.29	10.99	3.31	37.0	0.70	25.9	1.13	0.64	0.00	1.00	1.00	0.00	0.00	1.13	0.64	4.81	0.00	1391.5	47.4	102.6
44.19	10.99	3.30	37.0	0.70	25.9	1.12	0.64	0.00	1.00	1.00	0.00	0.00	1.12	0.64	4.90	0.00	1392.7	48.2	104.3
44.09	10.99	3.30	37.0	0.70	25.9	1.12	0.64	0.00	1.00	1.00	0.00	0.00	1.12	0.64	4.98	0.00	1393.9	49.0	106.0
43.99	10.99	3.29	37.0	0.70	25.9	1.12	0.64	0.00	1.00	1.00	0.00	0.00	1.12	0.64	5.07	0.00	1395.2	49.8	107.6
43.89	10.99	3.28	37.0	0.70	25.9	1.12	0.64	0.00	1.00	1.00	0.00	0.00	1.12	0.64	5.15	0.00	1396.4	50.6	109.3
43.79	10.99	3.28	37.0	0.70	25.9	1.11	0.64	0.00	1.00	1.00	0.00	0.00	1.11	0.64	5.23	0.00	1397.6	51.4	111.0
43.69	10.99	3.27	37.0	0.70	25.9	1.11	0.64	0.00	1.00	1.00	0.00	0.00	1.11	0.64	5.32	0.00	1398.9	52.2	112.7
43.59	10.99	3.26	37.0	0.70	25.9	1.11	0.63	0.00	1.00	1.00	0.00	0.00	1.11	0.63	5.40	0.00	1400.1	53.0	114.4
43.49	10.99	3.26	37.0	0.70	25.9	1.11	0.63	0.00	1.00	1.00	0.00	0.00	1.11	0.63	5.49	0.00	1401.3	53.7	116.1
43.39	10.99	3.25	37.0	0.70	25.9	1.10	0.63	0.00	1.00	1.00	0.00	0.00	1.10	0.63	5.57	0.00	1402.5	54.5	117.7
43.29	10.99	3.24	37.0	0.70	25.9	1.10	0.63	0.00	1.00	1.00	0.00	0.00	1.10	0.63	5.66	0.00	1403.7	55.3	119.4
43.19	10.99	3.24	37.0	0.70	25.9	1.10	0.63	0.00	1.00	1.00	0.00	0.00	1.10	0.63	5.74	0.00	1404.9	56.1	121.1
43.09	10.99	3.23	37.0	0.70	25.9	1.10	0.63	0.00	1.00	1.00	0.00	0.00	1.10	0.63	5.83	0.00	1406.1	56.8	122.7
42.99	10.99	3.22	37.0	0.70	25.9	1.10	0.63	0.00	1.00	1.00	0.00	0.00	1.10	0.63	5.91	0.00	1407.4	57.6	124.4
42.89	10.99	3.22	37.0	0.70	25.9	1.09	0.62	0.00	1.00	1.00	0.00	0.00	1.09	0.62	5.99	0.00	1408.6	58.4	126.0
42.79	10.99	3.21	37.0	0.70	25.9	1.09	0.62	0.00	1.00	1.00	0.00	0.00	1.09	0.62	6.08	0.00	1409.8	59.2	127.7
42.69	10.99	3.20	37.0	0.70	25.9	1.09	0.62	0.00	1.00	1.00	0.00	0.00	1.09	0.62	6.16	0.00	1411.0	59.9	129.3
42.59	10.99	3.20	37.0	0.70	25.9	1.09	0.62	0.00	1.00	1.00	0.00	0.00	1.09	0.62	6.25	0.00	1412.2	60.7	131.0
42.48	10.99	3.19	37.0	0.70	25.9	1.08	0.62	0.00	1.00	1.00	0.00	0.00	1.08	0.62	6.33	0.00	1413.4	61.5	132.6
42.38	10.99	3.19	37.0	0.70	25.9	1.08	0.62	0.00	1.00	1.00	0.00	0.00	1.08	0.62	6.42	0.00	1414.5	62.2	134.3
42.28	10.99	3.18	37.0	0.70	25.9	1.08	0.62	0.00	1.00	1.00	0.00	0.00	1.08	0.62	6.50	0.00	1415.7	63.0	135.9
42.18	10.99	3.17	37.0	0.70	25.9	1.08	0.62	0.00	1.00	1.00	0.00	0.00	1.08	0.62	6.59	0.00	1416.9	63.8	137.5
42.08	10.99	3.17	37.0	0.70	25.9	1.08	0.62	0.00	1.00	1.00	0.00	0.00	1.08	0.62	6.67	0.00	1418.1	64.5	139.2
41.98	10.99	3.16	37.0	0.70	25.9	1.07	0.61	0.00	1.00	1.00	0.00	0.00	1.07	0.61	6.75	0.00	1419.3	65.3	140.8
41.88	10.99	3.15	37.0	0.70	25.9	1.07	0.61	0.00	1.00	1.00	0.00	0.00	1.07	0.61	6.84	0.00	1420.5	66.0	142.4
41.78	10.99	3.15	37.0	0.70	25.9	1.07	0.61	0.00	1.00	1.00	0.00	0.00	1.07	0.61	6.92	0.00	1421.7	66.8	144.0
41.68	10.99	3.14	37.0	0.70	25.9	1.07	0.61	0.00	1.00	1.00	0.00	0.00	1.07	0.61	7.01	0.00	1422.8	67.6	145.7
41.58	10.99	3.14	37.0	0.70	25.9	1.07	0.61	0.00	1.00	1.00	0.00	0.00	1.07	0.61	7.09	0.00	1424.0	68.3	147.3
41.48	10.99	3.13	37.0	0.70	25.9	1.06	0.61	0.00	1.00	1.00	0.00	0.00	1.06	0.61	7.18	0.00	1425.2	69.1	148.9
41.38	10.99	3.12	37.0	0.70	25.9	1.06	0.61	0.00	1.00	1.00	0.00	0.00	1.06	0.61	7.26	0.00	1426.3	69.8	150.5
41.28	10.99	3.12	37.0	0.70	25.9	1.06	0.61	0.00	1.00	1.00	0.00	0.00	1.06	0.61	7.35	0.00	1427.5	70.6	152.1
41.18	10.99	3.11	37.0	0.70	25.9	1.06	0.60	0.00	1.00	1.00	0.00	0.00	1.06	0.60	7.43	0.00	1428.7	71.3	153.7
41.08	10.99	3.11	37.0	0.70	25.9	1.06	0.60	0.00	1.00	1.00	0.00	0.00	1.06	0.60	7.51	0.00	1429.8	72.1	155.3
40.98	10.99	3.10	37.0	0.70	25.9	1.05	0.60	0.00	1.00	1.00	0.00	0.00	1.05	0.60	7.60	0.00	1431.0	72.8	156.9
40.88	10.99	3.09	37.0	0.70	25.9	1.05	0.60	0.00	1.00	1.00	0.00	0.00	1.05	0.60	7.68	0.00	1432.2	73.6	158.5
40.78	10.99	3.09	37.0	0.70	25.9	1.05	0.60	0.00	1.00	1.00	0.00	0.00	1.05	0.60	7.77	0.00	1433.3	74.3	160.1
40.68	10.99	3.08	37.0	0.70	25.9	1.05	0.60	0.00	1.00	1.00	0.00	0.00	1.05	0.60	7.85	0.00	1434.5	75.1	161.7
40.58	10.99	3.08	37.0	0.70	25.9	1.05	0.60	0.00	1.00	1.00	0.00	0.00	1.05	0.60	7.94	0.00	1435.6	75.8	163.2
40.48	10.99	3.07	37.0	0.70	25.9	1.04	0.60	0.00	1.00	1.00	0.00	0.00	1.04	0.60	8.02	0.00	1436.8	76.5	164.8
40.38	10.99	3.06	37.0	0.70	25.9	1.04	0.60	0.00	1.00	1.00	0.00	0.00	1.04	0.60	8.11	0.00	1437.9	77.3	166.4
40.28	10.99	3.06	37.0	0.70	25.9	1.04	0.59	0.00	1.00	1.00	0.00	0.00	1.04	0.59	8.19	0.00	1439.1	78.0	168.0
40.18	10.99	3.05	37.0	0.70	25.9	1.04	0.59	0.00	1.00	1.00	0.00	0.00	1.04	0.59	8.27	0.00	1440.2	78.8	169.5
40.08	10.99	3.05	37.0	0.70	25.9	1.04	0.59	0.00	1.00	1.00	0.00	0.00	1.04	0.59	8.36	0.00	1441.3	79.5	171.1
39.98	10.99	3.04	0.0	0.70	0.0	0.00	0.00	1.50	1.00	1.00	1.50	1.50	1.50	1.50	8.44	0.00	1443.0	81.2	174.0
39.88	10.99	3.03	0.0	0.70	0.0	0.00	0.00	1.50	1.00	1.00	1.50	1.50	1.50	1.50	8.53	0.00	1444.6	83.0	176.9

39.78	10.99	3.02	0.0	0.70	0.0	0.00	0.00	1.50	1.00	1.00	1.50	1.50	1.50	1.50	8.61	0.00	1446.3	84.7	179.8
39.68	10.99	3.02	0.0	0.70	0.0	0.00	0.00	1.50	1.00	1.00	1.50	1.50	1.50	1.50	8.70	0.00	1448.0	86.4	182.7
39.58	10.99	3.01	0.0	0.70	0.0	0.00	0.00	1.50	1.00	1.00	1.50	1.50	1.50	1.50	8.78	0.00	1449.6	88.2	185.6
39.48	10.99	3.00	0.0	0.70	0.0	0.00	0.00	1.50	1.00	1.00	1.50	1.50	1.50	1.50	8.87	0.00	1451.3	89.9	188.4
39.38	10.99	3.00	0.0	0.70	0.0	0.00	0.00	1.50	1.00	1.00	1.50	1.50	1.50	1.50	8.95	0.00	1452.9	91.6	191.3
39.28	10.99	2.99	0.0	0.70	0.0	0.00	0.00	1.50	1.00	1.00	1.50	1.50	1.50	1.50	9.03	0.00	1454.6	93.4	194.2
39.18	10.99	2.98	0.0	0.70	0.0	0.00	0.00	1.50	1.00	1.00	1.50	1.50	1.50	1.50	9.12	0.00	1456.2	95.1	197.1
39.08	10.99	2.97	0.0	0.70	0.0	0.00	0.00	1.50	1.00	1.00	1.50	1.50	1.50	1.50	9.20	0.00	1457.9	96.9	200.0
38.98	10.99	2.97	0.0	0.70	0.0	0.00	0.00	1.50	1.00	1.00	1.50	1.50	1.50	1.50	9.29	0.00	1459.5	98.6	202.9
38.88	10.99	2.96	0.0	0.70	0.0	0.00	0.00	1.50	1.00	1.00	1.50	1.50	1.50	1.50	9.37	0.00	1461.2	100.3	205.8
38.78	10.99	2.95	0.0	0.70	0.0	0.00	0.00	1.50	1.00	1.00	1.50	1.50	1.50	1.50	9.46	0.00	1462.8	102.1	208.7
38.68	10.99	2.95	0.0	0.70	0.0	0.00	0.00	1.50	1.00	1.00	1.50	1.50	1.50	1.50	9.54	0.00	1464.5	103.8	211.6
38.58	10.99	2.94	0.0	0.70	0.0	0.00	0.00	1.50	1.00	1.00	1.50	1.50	1.50	1.50	9.63	0.00	1466.1	105.5	214.5
38.48	10.99	2.93	0.0	0.70	0.0	0.00	0.00	1.50	1.00	1.00	1.50	1.50	1.50	1.50	9.71	0.00	1467.8	107.3	217.3
38.38	10.99	2.93	0.0	0.70	0.0	0.00	0.00	1.50	1.00	1.00	1.50	1.50	1.50	1.50	9.79	0.00	1469.4	109.0	220.2
38.28	10.99	2.92	0.0	0.70	0.0	0.00	0.00	1.50	1.00	1.00	1.50	1.50	1.50	1.50	9.88	0.00	1471.1	110.7	223.1
38.18	10.99	2.91	0.0	0.70	0.0	0.00	0.00	1.50	1.00	1.00	1.50	1.50	1.50	1.50	9.96	0.00	1472.7	112.5	226.0
38.08	10.99	2.90	0.0	0.70	0.0	0.00	0.00	1.50	1.00	1.00	1.50	1.50	1.50	1.50	10.05	0.00	1474.4	114.2	228.9
37.98	10.99	2.90	0.0	0.70	0.0	0.00	0.00	1.50	1.00	1.00	1.50	1.50	1.50	1.50	10.13	0.00	1476.0	116.0	231.8
37.88	10.99	2.89	0.0	0.70	0.0	0.00	0.00	1.50	1.00	1.00	1.50	1.50	1.50	1.50	10.22	0.00	1477.7	117.7	234.7
37.78	10.99	2.88	0.0	0.70	0.0	0.00	0.00	1.50	1.00	1.00	1.50	1.50	1.50	1.50	10.30	0.00	1479.3	119.4	237.6
37.68	10.99	2.88	0.0	0.70	0.0	0.00	0.00	1.50	1.00	1.00	1.50	1.50	1.50	1.50	10.39	0.00	1481.0	121.2	240.5
37.58	10.99	2.87	0.0	0.70	0.0	0.00	0.00	1.50	1.00	1.00	1.50	1.50	1.50	1.50	10.47	0.00	1482.6	122.9	243.4
37.47	10.99	2.86	0.0	0.70	0.0	0.00	0.00	1.50	1.00	1.00	1.50	1.50	1.50	1.50	10.55	0.00	1484.1	124.6	246.2
37.37	10.99	2.86	0.0	0.70	0.0	0.00	0.00	1.50	1.00	1.00	1.50	1.50	1.50	1.50	10.64	0.00	1485.9	126.4	249.1
37.27	10.99	2.85	0.0	0.70	0.0	0.00	0.00	1.50	1.00	1.00	1.50	1.50	1.50	1.50	10.72	0.00	1487.6	128.1	252.0
37.17	10.99	2.84	0.0	0.70	0.0	0.00	0.00	1.50	1.00	1.00	1.50	1.50	1.50	1.50	10.81	0.00	1489.3	129.8	254.9
37.07	10.99	2.83	0.0	0.70	0.0	0.00	0.00	1.50	1.00	1.00	1.50	1.50	1.50	1.50	10.89	0.00	1490.9	131.6	257.8
36.97	10.99	2.83	0.0	0.70	0.0	0.00	0.00	1.50	1.00	1.00	1.50	1.50	1.50	1.50	10.98	0.00	1492.6	133.3	260.7
36.87	10.99	2.82	0.0	0.70	0.0	0.00	0.00	1.50	1.00	1.00	1.50	1.50	1.50	1.50	11.06	0.00	1494.2	135.1	263.6
36.77	10.99	2.81	0.0	0.70	0.0	0.00	0.00	1.50	1.00	1.00	1.50	1.50	1.50	1.50	11.15	0.00	1495.9	136.8	266.5
36.67	10.99	2.81	0.0	0.70	0.0	0.00	0.00	1.50	1.00	1.00	1.50	1.50	1.50	1.50	11.23	0.00	1497.5	138.5	269.4
36.57	10.99	2.80	0.0	0.70	0.0	0.00	0.00	1.50	1.00	1.00	1.50	1.50	1.50	1.50	11.31	0.00	1499.2	140.3	272.3
36.47	10.99	2.79	0.0	0.70	0.0	0.00	0.00	1.50	1.00	1.00	1.50	1.50	1.50	1.50	11.40	0.00	1500.8	142.0	275.1
36.37	10.99	2.78	0.0	0.70	0.0	0.00	0.00	1.50	1.00	1.00	1.50	1.50	1.50	1.50	11.48	0.00	1502.5	143.7	278.0
36.27	10.99	2.78	0.0	0.70	0.0	0.00	0.00	1.50	1.00	1.00	1.50	1.50	1.50	1.50	11.57	0.00	1504.1	145.5	280.9
36.17	10.99	2.77	0.0	0.70	0.0	0.00	0.00	1.50	1.00	1.00	1.50	1.50	1.50	1.50	11.65	0.00	1505.8	147.2	283.8
36.07	10.99	2.76	0.0	0.70	0.0	0.00	0.00	1.50	1.00	1.00	1.50	1.50	1.50	1.50	11.74	0.00	1507.4	149.0	286.7
35.97	10.99	2.76	0.0	0.70	0.0	0.00	0.00	1.50	1.00	1.00	1.50	1.50	1.50	1.50	11.82	0.00	1509.1	150.7	289.6
35.87	10.99	2.75	0.0	0.70	0.0	0.00	0.00	1.50	1.00	1.00	1.50	1.50	1.50	1.50	11.91	0.00	1510.7	152.4	292.5
35.77	10.99	2.74	0.0	0.70	0.0	0.00	0.00	1.50	1.00	1.00	1.50	1.50	1.50	1.50	11.99	0.00	1512.4	154.2	295.4
35.67	10.99	2.74	0.0	0.70	0.0	0.00	0.00	1.50	1.00	1.00	1.50	1.50	1.50	1.50	12.07	0.00	1514.0	155.9	298.3
35.57	10.99	2.73	0.0	0.70	0.0	0.00	0.00	1.50	1.00	1.00	1.50	1.50	1.50	1.50	12.16	0.00	1515.7	157.6	301.2
35.47	10.99	2.72	0.0	0.70	0.0	0.00	0.00	1.50	1.00	1.00	1.50	1.50	1.50	1.50	12.24	0.00	1517.3	159.4	304.0
35.37	10.99	2.71	0.0	0.70	0.0	0.00	0.00	1.50	1.00	1.00	1.50	1.50	1.50	1.50	12.33	0.00	1519.0	161.1	306.9
35.27	10.99	2.71	0.0	0.70	0.0	0.00	0.00	1.50	1.00	1.00	1.50	1.50	1.50	1.50	12.41	0.00	1520.6	162.8	309.8
35.17	10.99	2.70	0.0	0.70	0.0	0.00	0.00	1.50	1.00	1.00	1.50	1.50	1.50	1.50	12.50	0.00	1522.3	164.6	312.7
35.07	10.99	2.69	0.0	0.70	0.0	0.00	0.00	1.50	1.00	1.00	1.50	1.50	1.50	1.50	12.58	0.00	1523.9	166.3	315.6
34.97	10.99	2.69	0.0	0.70	0.0	0.00	0.00	1.50	1.00	1.00	1.50	1.50	1.50	1.50	12.67	0.00	1525.6	168.1	318.5
34.87	10.99	2.68	0.0	0.70	0.0	0.00	0.00	1.50	1.00	1.00	1.50	1.50	1.50	1.50	12.75	0.00	1527.3	169.8	321.4
34.77	10.99	2.67	0.0	0.70	0.0	0.00	0.00	1.50	1.00	1.00	1.50	1.50	1.50	1.50	12.83	0.00	1528.9	171.5	324.3
34.67	10.99	2.67	0.0	0.70	0.0	0.00	0.00	1.50	1.00	1.00	1.50	1.50	1.50	1.50	12.92	0.00	1530.6	173.3	327.2
34.57	10.99	2.66	0.0	0.70	0.0	0.00	0.00	1.50	1.00	1.00	1.50	1.50	1.50	1.50	13.00	0.00	1532.2	175.0	330.1
34.47	10.99	2.65	0.0	0.70	0.0	0.00	0.00	1.50	1.00	1.00	1.50	1.50	1.50	1.50	13.09	0.00	1533.9	176.7	332.9
34.37	10.99	2.64	0.0	0.70	0.0	0.00	0.00	1.50	1.00	1.00	1.50	1.50	1.50	1.50	13.17	0.00	1535.5	178.5	335.8
34.27	10.99	2.64	0.0	0.70	0.0	0.00	0.00	1.50	1.00	1.00	1.50	1.50	1.50	1.50	13.26	0.00	1537.2	180.2	338.7
34.17	10.99	2.63	0.0	0.70	0.0	0.00	0.00	1.50	1.00	1.00	1.50	1.50	1.50	1.50	13.34	0.00	1538.8	181.9	341.6
34.07	10.99	2.62	0.0	0.70	0.0	0.00	0.00	1.50	1.00	1.00	1.50	1.50	1.50	1.50	13.43	0.00	1540.5	183.7	344.5
33.97	10.99	2.62	0.0	0.70	0.0	0.00	0.00	1.50	1.00	1.00	1.50	1.50	1.50	1.50	13.51	0.00	1542.1	185.4	347.4
33.87	10.99	2.61	0.0	0.70	0.0	0.00	0.00	1.50	1.00	1.00	1.50	1.50	1.50	1.50	13.59	0.00	1543.8	187.2	350.3
33.77	10.99	2.60	0.0	0.70	0.0	0.00	0.00	1.50	1.00	1.00	1.50	1.50	1.50	1.50	13.68	0.00	1545.4	188.9	353.2
33.67	10.99	2.60	0.0	0.70	0.0	0.00	0.00	1.50	1.00	1.00	1.50	1.50	1.50	1.50	13.76	0.00	1547.1	190.6	356.1
33.57	10.99	2.59	0.0	0.70	0.0	0.00	0.00	1.50	1.00	1.00	1.50	1.50	1.50	1.50	13.85	0.00	1548.7	192.4	359.0
33.47	10.99	2.58	0.0	0.70	0.0	0.00	0.00	1.50	1.00	1.00	1.50	1.50	1.50	1.50	13.93	0.00	1550.4	194.1	361.8
33.37	10.99	2.57	0.0	0.70	0.0	0.00	0.00	1.50	1.00	1.00	1.50	1.50	1.50	1.50	14.02	0.00	1552.0	195.8	364.7
33.27	10.99	2.57	0.0	0.70	0.0	0.00	0.00	1.50	1.00	1.00	1.50	1.50	1.50	1.50	14.10	0.00	1553.7	197.6	367.6
33.17	10.99	2.56	0.0	0.70	0.0	0.00	0.00	1.50	1.00	1.00	1.50	1.50	1.50	1.50	14.19	0.00	1555.3	199.3	370.5
33.07	10.99	2.55	0.0	0.70	0.0	0.00	0.00	1.50	1.00	1.00	1.50	1.50	1.50	1.50	14.27	0.00	1557.0	201.0	373.4
32.97	10.99	2.55	0.0	0.70	0.0	0.00	0.00	1.50	1.00	1.00	1.50	1.50	1.50	1.50	14.35	0.00	1558.6	202.8	376.3
32.87	10.99	2.54	0.0	0.70	0.0	0.00	0.00	1.50	1.00	1.00	1.50	1.50	1.50	1.50	14.44	0.00	1560.3	204.5	379.2
32.77	10.99	2.53	0.0	0.70	0.0	0.00	0.00	1.50	1.00	1.00	1.50	1.50	1.50	1.50	14.52	0.00	1561.9	206.3	382.1
32.67	10.99	2.52	0.0	0.70	0.0	0.00	0.00	1.50	1.00	1.00	1.50	1.50	1.50	1.50	14.61	0.00	1563.6	208.0	385.0
32.57	10.99	2.52	0.0	0.70	0.0	0.00	0.00	1.50	1.00	1.00	1.50	1.50	1.50	1.50	14.69	0.00	1565.2	209.7	387.9
32.46	10.99	2.51	0.0	0.70	0.0	0.00	0.00	1.50	1.00	1.00	1.50	1.50	1.50	1.50	14.78	0.00	1566.9	211.5	390.7
32.36	10.99	2.50	0.0	0.70	0.0	0.00	0.00	1.50	1.00	1.00	1.50	1.50	1.50	1.50	14.86	0.00	1568.6	213.2	393.6
32.26	10.99	2.50	0.0	0.70	0.0	0.00	0.00	1.50	1.00	1.00	1.50	1.50	1.50	1.50	14.94	0.00	1570.2	214.9	396.5
32.16	10.99	2.49	0.0	0.70	0.0	0.00	0.00	1.50	1.00	1.00	1.50	1.50	1.50	1.50	15.03	0.00	1571.9	216.7	399.4
32.06	10.99	2.48	0.0	0.70	0.0	0.00	0.00	1.50	1.00	1.00	1.50	1.50	1.50	1.50	15.11	0.00	1573.5	218.4	402.3
31.96	10.99	2.48	35.0	0.70	24.5	0.79	0.45	0.00	1.00	1.00	0.00	0.00	0.79	0.45	15.20	0.00	1574.4	219.0	403.5
31.86	10.99	2.47	35.0	0.70	24.5	0.79	0.45	0.00	1.00	1.00	0.00	0.00	0.79	0.45	15.28	0.00	1575.2	219.6	404.7
31.76	10.99	2.46	35.0	0.70	24.5	0.79	0.45	0.00	1.00	1.00	0.00	0.00	0.79	0.45	15.37	0.00	1576.1	220.2	405.9
31.66	10.99	2.46	35.0	0.70	24.5	0.78	0.45	0.00	1.00	1.00	0.00	0.00	0.78	0.45	15.45	0.00	1577.0	220.7	407.1
31.56	10.99	2.45	35.0	0.70	24.5	0.78	0.45	0.00	1.00	1.00	0.00	0.00	0.78	0.45	15.54	0.00	1577.8	221.3	408.3
31.46	10.99	2.45	35.0	0.70	24.5	0.78	0.45	0.00	1.00	1.00	0.00	0.00	0.78	0.45	15.62	0.00	1578.7	221.9	409.4
31.36	10.99	2.44	35.0	0.70	24.5	0.78	0.44	0.00	1.00	1.00	0.00	0.00	0.78	0.44	15.70	0.00	1579.6	222.5	410.6
31.26	10.99	2.43	35.0	0.70	24.5	0.78	0.44	0.00	1.00	1.00	0.00	0.00	0.78	0.44	15.79	0.00	1580.4	223.0	411.8
31.16	10.99	2.43	35.0	0.70	24.5	0.77	0.44	0.00	1.00	1.00	0.00	0.00	0.77	0.44	15.87	0.00	1581.3	223.6	413.0
31.06	10.99	2.42	35.0	0.70	24.5	0.77	0.44	0.00	1.00	1.00	0.00	0.00	0.77	0.44	15.96	0.00	1582.1	224.2	414.1
30.96	10.99	2.42	35.0	0.70	24.5	0.77	0.44	0.00	1.00	1.00	0.00	0.00	0.77	0.44	16.04	0.00	1583.0	224.7	415.3
30.86	10.99	2.41	35.0	0.70	24.5	0.77	0.44	0.00	1.00	1.00	0.00	0.00	0.77	0.44	16.13	0.00	1583.8	225.3	416.5
30.76	10.99	2.40	35.0	0.70	24.5	0.77	0.44	0.00	1.00	1.00	0.00	0.00	0.77	0.44	16.21	0.00	1584.7	225.9	417.6
30.66	10.99	2.40	35.0	0.70	24.5	0.76	0.44	0.00	1.00	1.00	0.00	0.00	0.76	0.44	16.30	0.00	1585.5	226.4	418.8
30.56	10.99	2.39	35.0	0.70	24.5	0.76	0.44	0.00	1.00	1.00	0.00	0.00	0.76	0.44	16.38	0.00	1586.3	227.0	419.9
30.46	10.99	2.39	35.0	0.70	24.5	0.76	0.43	0.00	1.00	1.00	0.00	0.00	0.76	0.43	16.46	0.00	1587.2	227.6	421.1
30.36	10.99	2.38	35.0	0.70	24.5	0.76	0.43	0.00	1.00	1.00	0.00	0.00	0.76	0.43	16.55	0.00	1588.0	228.1	422.2
30.26	10.99	2.37	35.0	0.70	24.5	0.76	0.43	0.00	1.00	1.00	0.00	0.00	0.76	0.43	16.63	0.00	1588.8	228.7	423.4
30.16	10.99	2.37	35.0	0.70	24.5	0.76	0.43	0.00	1.00	1.00	0.00	0.00	0.76	0.43	16.72	0.00	1589.7	229.3	424.5
30.06	10.99	2.36	35.0	0.70	24.5	0.75	0.43	0.00	1.00	1.00	0.00	0.00	0.75	0.43	16.80	0.00	1590.5	229.8	425.7
29.96	10.99	2.36	35.0	0.70	24.5	0.75	0.43	0.00	1.00	1.00	0.00	0.00	0.75	0.43	16.89	0.00	1591.3	230.4	426.8
29.86	10.99	2.35	35.0	0.70	24.5	0.75	0.43	0.00	1.00	1.00	0.00	0.00	0.75	0.43	16.97	0.00	1592.2	230.9	427.9
29.76	10.99	2.34	35.0	0.70	24.5	0.75	0.43	0.00	1.00	1.00	0.00	0.00	0.75	0.43	17.06	0.00	1593.0	231.5	429.1
29.66	10.99	2.34	35.0	0.70	24.5	0.75	0.43	0.00	1.00	1.00	0.00	0.00	0.75	0.43	17.14	0.00	1593.8	232.0	430.2
29.56	10.99	2.33	35.0	0.70	24.5	0.74	0.42	0.00	1.00	1.00	0.00	0.00	0.74	0.42	17.22	0.00	1594.6	232.6	431.3
29.46	10.99	2.33	35.0	0.70	24.5	0.74	0.42	0.00	1.00	1.00	0.00	0.00	0.74	0.42	17.31	0.00	1595.4	233.1	432.5
29.36	10.99	2.32	35.0	0.70	24.5	0.74	0.42	0.00	1.00	1.00	0.00	0.00	0.74	0.42	17.39	0.00	1596.3	233.7	433.6
29.26	10.99	2.31	35.0	0.70	24.5	0.74	0.42	0.00	1.00	1.00	0.00	0.00	0.74	0.42	17.48	0.00	1597.1	234.2	434.7
29.16	10.99	2.31	35.0	0.70	24.5	0.74	0.42	0.00	1.00	1.00	0.00	0.00	0.74	0.42	17.56	0.00	1597.9	234.8	435.8
29.06	10.99	2.30	35.0	0.70	24.5	0.73	0.42	0.00	1.00	1.00	0.00	0.00	0.73	0.42	17.65	0.00	1598.7	235.3	436.9
28.96	10.99	2.29	35.0	0.70	24.5	0.73	0.42	0.00	1.00	1.00	0.00	0.00	0.73	0.42	17.73	0.00	1599.5	235.9	438.0
28.86	10.99	2.29	35.0	0.70	24.5	0.73	0.42	0.00	1.00	1.00	0.00	0.00	0.73	0.42	17.82	0.00	1600.3	236.4	439.1
28.76	10.99	2.28	35.0	0.70	24.5	0.73	0.42	0.00	1.00	1.00	0.00	0.00	0.73	0.42	17.90	0.00	1601.1	237.0	440.2
28.66	10.99	2.28	35.0	0.70	24.5	0.73	0.42	0.00	1.00	1.00	0.00	0.00	0.73	0.42	17.98	0.00	1601.9	237.5	441.3
28.56	10.99	2.27	35.0	0.70	24.5	0.72	0.41	0.00	1.00	1.00	0.00	0.00	0.72	0.41	18.07	0.00	1602.7	238.0	442.4
28.46	10.99	2.26	35.0	0.70	24.5	0.72	0.41	0.00	1.00	1.00	0.00	0.00	0.72	0.41	18.15	0.00	1603.5	238.6	443.5
28.36	10.99	2.26	35.0	0.70	24.5	0.72	0.41	0.00	1.00	1.00	0.00	0.00	0.72	0.41	18.24	0.00	1604.3	239.1	444.6
28.26	10.99	2.25	35.0	0.70	24.5	0.72	0.41	0.00	1.00	1.00	0.00	0.00	0.72	0.41	18.32	0.00	1605.1	239.7	445.7
28.16	10.99	2.25	35.0	0.70	24.5	0.72	0.41	0.00	1.00	1.00	0.00	0.00	0.72	0.41	18.41	0.00	1605.9	240.2	446.8

28.06	10.99	2.24	35.0	0.70	24.5	0.71	0.41	0.00	1.00	1.00	0.00	0.00	0.71	0.41	18.49	0.00	1606.7	240.7	447.9
27.96	10.99	2.23	35.0	0.70	24.5	0.71	0.41	0.00	1.00	1.00	0.00	0.00	0.71	0.41	18.58	0.00	1607.4	241.3	448.9
27.86	10.99	2.23	35.0	0.70	24.5	0.71	0.41	0.00	1.00	1.00	0.00	0.00	0.71	0.41	18.66	0.00	1608.2	241.8	450.0
27.76	10.99	2.22	35.0	0.70	24.5	0.71	0.41	0.00	1.00	1.00	0.00	0.00	0.71	0.41	18.74	0.00	1609.0	242.3	451.1
27.66	10.99	2.22	35.0	0.70	24.5	0.71	0.40	0.00	1.00	1.00	0.00	0.00	0.71	0.40	18.83	0.00	1609.8	242.9	452.2
27.56	10.99	2.21	35.0	0.70	24.5	0.71	0.40	0.00	1.00	1.00	0.00	0.00	0.71	0.40	18.91	0.00	1610.6	243.4	453.2
27.45	10.99	2.20	35.0	0.70	24.5	0.70	0.40	0.00	1.00	1.00	0.00	0.00	0.70	0.40	19.00	0.00	1611.3	243.9	454.3
27.35	10.99	2.20	35.0	0.70	24.5	0.70	0.40	0.00	1.00	1.00	0.00	0.00	0.70	0.40	19.08	0.00	1612.1	244.4	455.4
27.25	10.99	2.19	35.0	0.70	24.5	0.70	0.40	0.00	1.00	1.00	0.00	0.00	0.70	0.40	19.17	0.00	1612.9	245.0	456.4
27.15	10.99	2.19	35.0	0.70	24.5	0.70	0.40	0.00	1.00	1.00	0.00	0.00	0.70	0.40	19.25	0.00	1613.6	245.5	457.5
27.05	10.99	2.18	35.0	0.70	24.5	0.70	0.40	0.00	1.00	1.00	0.00	0.00	0.70	0.40	19.34	0.00	1614.4	246.0	458.5
26.95	10.99	2.17	32.0	0.70	22.4	0.63	0.36	0.50	1.00	1.00	0.50	0.50	1.13	0.86	19.42	0.00	1615.6	247.0	460.4
26.85	10.99	2.17	32.0	0.70	22.4	0.62	0.36	0.50	1.00	1.00	0.50	0.50	1.12	0.86	19.50	0.00	1616.9	248.1	462.3
26.75	10.99	2.16	32.0	0.70	22.4	0.62	0.36	0.50	1.00	1.00	0.50	0.50	1.12	0.86	19.59	0.00	1618.1	249.1	464.3
26.65	10.99	2.15	32.0	0.70	22.4	0.62	0.35	0.50	1.00	1.00	0.50	0.50	1.12	0.85	19.67	0.00	1619.4	250.1	466.2
26.55	10.99	2.14	32.0	0.70	22.4	0.62	0.35	0.50	1.00	1.00	0.50	0.50	1.12	0.85	19.76	0.00	1620.6	251.1	468.1
26.45	10.99	2.14	32.0	0.70	22.4	0.62	0.35	0.50	1.00	1.00	0.50	0.50	1.12	0.85	19.84	0.00	1621.8	252.2	470.0
26.35	10.99	2.13	32.0	0.70	22.4	0.61	0.35	0.50	1.00	1.00	0.50	0.50	1.11	0.85	19.93	0.00	1623.0	253.2	471.8
26.25	10.99	2.12	32.0	0.70	22.4	0.61	0.35	0.50	1.00	1.00	0.50	0.50	1.11	0.85	20.01	0.00	1624.3	254.2	473.7
26.15	10.99	2.12	32.0	0.70	22.4	0.61	0.35	0.50	1.00	1.00	0.50	0.50	1.11	0.85	20.10	0.00	1625.5	255.2	475.6
26.05	10.99	2.11	32.0	0.70	22.4	0.61	0.35	0.50	1.00	1.00	0.50	0.50	1.11	0.85	20.18	0.00	1626.7	256.2	477.5
25.95	10.99	2.10	32.0	0.70	22.4	0.61	0.35	0.50	1.00	1.00	0.50	0.50	1.11	0.85	20.26	0.00	1627.9	257.3	479.4
25.85	10.99	2.10	32.0	0.70	22.4	0.60	0.35	0.50	1.00	1.00	0.50	0.50	1.10	0.85	20.35	0.00	1629.2	258.3	481.3
25.75	10.99	2.09	32.0	0.70	22.4	0.60	0.34	0.50	1.00	1.00	0.50	0.50	1.10	0.84	20.43	0.00	1630.4	259.3	483.1
25.65	10.99	2.08	32.0	0.70	22.4	0.60	0.34	0.50	1.00	1.00	0.50	0.50	1.10	0.84	20.52	0.00	1631.6	260.3	485.0
25.55	10.99	2.07	32.0	0.70	22.4	0.60	0.34	0.50	1.00	1.00	0.50	0.50	1.10	0.84	20.60	0.00	1632.8	261.3	486.9
25.45	10.99	2.07	32.0	0.70	22.4	0.60	0.34	0.50	1.00	1.00	0.50	0.50	1.10	0.84	20.69	0.00	1634.0	262.3	488.8
25.35	10.99	2.06	32.0	0.70	22.4	0.59	0.34	0.50	1.00	1.00	0.50	0.50	1.09	0.84	20.77	0.00	1635.2	263.3	490.6
25.25	10.99	2.05	32.0	0.70	22.4	0.59	0.34	0.50	1.00	1.00	0.50	0.50	1.09	0.84	20.86	0.00	1636.4	264.3	492.5
25.15	10.99	2.05	32.0	0.70	22.4	0.59	0.34	0.50	1.00	1.00	0.50	0.50	1.09	0.84	20.94	0.00	1637.6	265.3	494.3
25.05	10.99	2.04	32.0	0.70	22.4	0.59	0.34	0.50	1.00	1.00	0.50	0.50	1.09	0.84	21.02	0.00	1638.8	266.4	496.2
24.95	10.99	2.03	32.0	0.70	22.4	0.59	0.33	0.50	1.00	1.00	0.50	0.50	1.09	0.83	21.11	0.00	1640.0	267.4	498.0
24.85	10.99	2.02	32.0	0.70	22.4	0.58	0.33	0.50	1.00	1.00	0.50	0.50	1.08	0.83	21.19	0.00	1641.2	268.4	499.9
24.75	10.99	2.02	32.0	0.70	22.4	0.58	0.33	0.50	1.00	1.00	0.50	0.50	1.08	0.83	21.28	0.00	1642.4	269.4	501.7
24.65	10.99	2.01	32.0	0.70	22.4	0.58	0.33	0.50	1.00	1.00	0.50	0.50	1.08	0.83	21.36	0.00	1643.6	270.4	503.6
24.55	10.99	2.00	32.0	0.70	22.4	0.58	0.33	0.50	1.00	1.00	0.50	0.50	1.08	0.83	21.45	0.00	1644.8	271.4	505.4
24.45	10.99	2.00	32.0	0.70	22.4	0.58	0.33	0.50	1.00	1.00	0.50	0.50	1.08	0.83	21.53	0.00	1645.9	272.4	507.2
24.35	10.99	1.99	32.0	0.70	22.4	0.57	0.33	0.50	1.00	1.00	0.50	0.50	1.07	0.83	21.62	0.00	1647.1	273.4	509.1
24.25	10.99	1.98	32.0	0.70	22.4	0.57	0.33	0.50	1.00	1.00	0.50	0.50	1.07	0.83	21.70	0.00	1648.3	274.3	510.9
24.15	10.99	1.98	32.0	0.70	22.4	0.57	0.33	0.50	1.00	1.00	0.50	0.50	1.07	0.83	21.78	0.00	1649.5	275.3	512.7
24.05	10.99	1.97	32.0	0.70	22.4	0.57	0.32	0.50	1.00	1.00	0.50	0.50	1.07	0.82	21.87	0.00	1650.7	276.3	514.6
23.95	10.99	1.96	32.0	0.70	22.4	0.57	0.32	0.50	1.00	1.00	0.50	0.50	1.07	0.82	21.95	0.00	1651.8	277.3	516.4
23.85	10.99	1.95	32.0	0.70	22.4	0.56	0.32	0.50	1.00	1.00	0.50	0.50	1.06	0.82	22.04	0.00	1653.0	278.3	518.2
23.75	10.99	1.95	32.0	0.70	22.4	0.56	0.32	0.50	1.00	1.00	0.50	0.50	1.06	0.82	22.12	0.00	1654.2	279.3	520.0
23.65	10.99	1.94	32.0	0.70	22.4	0.56	0.32	0.50	1.00	1.00	0.50	0.50	1.06	0.82	22.21	0.00	1655.3	280.3	521.8
23.55	10.99	1.93	32.0	0.70	22.4	0.56	0.32	0.50	1.00	1.00	0.50	0.50	1.06	0.82	22.29	0.00	1656.5	281.3	523.6
23.45	10.99	1.93	32.0	0.70	22.4	0.56	0.32	0.50	1.00	1.00	0.50	0.50	1.06	0.82	22.38	0.00	1657.7	282.3	525.4
23.35	10.99	1.92	32.0	0.70	22.4	0.55	0.32	0.50	1.00	1.00	0.50	0.50	1.05	0.82	22.46	0.00	1658.8	283.2	527.2
23.25	10.99	1.91	32.0	0.70	22.4	0.55	0.32	0.50	1.00	1.00	0.50	0.50	1.05	0.82	22.54	0.00	1660.0	284.2	529.0
23.15	10.99	1.90	32.0	0.70	22.4	0.55	0.31	0.50	1.00	1.00	0.50	0.50	1.05	0.81	22.63	0.00	1661.2	285.2	530.8
23.05	10.99	1.90	32.0	0.70	22.4	0.55	0.31	0.50	1.00	1.00	0.50	0.50	1.05	0.81	22.71	0.00	1662.3	286.2	532.6
22.95	10.99	1.89	32.0	0.70	22.4	0.55	0.31	0.50	1.00	1.00	0.50	0.50	1.05	0.81	22.80	0.00	1663.5	287.2	534.4
22.85	10.99	1.88	32.0	0.70	22.4	0.54	0.31	0.50	1.00	1.00	0.50	0.50	1.04	0.81	22.88	0.00	1664.6	288.1	536.2
22.75	10.99	1.88	32.0	0.70	22.4	0.54	0.31	0.50	1.00	1.00	0.50	0.50	1.04	0.81	22.97	0.00	1665.8	289.1	538.0
22.65	10.99	1.87	32.0	0.70	22.4	0.54	0.31	0.50	1.00	1.00	0.50	0.50	1.04	0.81	23.05	0.00	1666.9	290.1	539.8
22.55	10.99	1.86	32.0	0.70	22.4	0.54	0.31	0.50	1.00	1.00	0.50	0.50	1.04	0.81	23.14	0.00	1668.0	291.1	541.5
22.44	10.99	1.86	32.0	0.70	22.4	0.54	0.31	0.50	1.00	1.00	0.50	0.50	1.04	0.81	23.22	0.00	1669.2	292.0	543.3
22.34	10.99	1.85	32.0	0.70	22.4	0.53	0.30	0.50	1.00	1.00	0.50	0.50	1.03	0.80	23.30	0.00	1670.3	293.0	545.1
22.24	10.99	1.84	32.0	0.70	22.4	0.53	0.30	0.50	1.00	1.00	0.50	0.50	1.03	0.80	23.39	0.00	1671.5	294.0	546.8
22.14	10.99	1.83	32.0	0.70	22.4	0.53	0.30	0.50	1.00	1.00	0.50	0.50	1.03	0.80	23.47	0.00	1672.6	295.0	548.6
22.04	10.99	1.83	32.0	0.70	22.4	0.53	0.30	0.50	1.00	1.00	0.50	0.50	1.03	0.80	23.56	0.00	1673.7	295.9	550.4
21.94	10.99	1.82	32.0	0.70	22.4	0.53	0.30	0.00	1.00	1.00	0.00	0.00	0.53	0.30	23.64	0.00	1674.3	296.3	551.2
21.84	10.99	1.82	32.0	0.70	22.4	0.52	0.30	0.00	1.00	1.00	0.00	0.00	0.52	0.30	23.73	0.00	1674.9	296.7	552.0
21.74	10.99	1.81	32.0	0.70	22.4	0.52	0.30	0.00	1.00	1.00	0.00	0.00	0.52	0.30	23.81	0.00	1675.5	297.2	552.7
21.64	10.99	1.80	32.0	0.70	22.4	0.52	0.30	0.00	1.00	1.00	0.00	0.00	0.52	0.30	23.90	0.00	1676.0	297.6	553.5
21.54	10.99	1.80	32.0	0.70	22.4	0.52	0.30	0.00	1.00	1.00	0.00	0.00	0.52	0.30	23.98	0.00	1676.6	298.0	554.3
21.44	10.99	1.79	32.0	0.70	22.4	0.52	0.30	0.00	1.00	1.00	0.00	0.00	0.52	0.30	24.06	0.00	1677.2	298.4	555.1
21.34	10.99	1.79	32.0	0.70	22.4	0.52	0.29	0.00	1.00	1.00	0.00	0.00	0.52	0.29	24.15	0.00	1677.7	298.8	555.9
21.24	10.99	1.78	32.0	0.70	22.4	0.51	0.29	0.00	1.00	1.00	0.00	0.00	0.51	0.29	24.23	0.00	1678.3	299.2	556.7
21.14	10.99	1.78	32.0	0.70	22.4	0.51	0.29	0.00	1.00	1.00	0.00	0.00	0.51	0.29	24.32	0.00	1678.9	299.6	557.4
21.04	10.99	1.77	32.0	0.70	22.4	0.51	0.29	0.00	1.00	1.00	0.00	0.00	0.51	0.29	24.40	0.00	1679.4	300.0	558.2
20.94	10.99	1.76	32.0	0.70	22.4	0.51	0.29	0.00	1.00	1.00	0.00	0.00	0.51	0.29	24.49	0.00	1680.0	300.4	559.0
20.84	10.99	1.76	32.0	0.70	22.4	0.51	0.29	0.00	1.00	1.00	0.00	0.00	0.51	0.29	24.57	0.00	1680.5	300.8	559.8
20.74	10.99	1.75	32.0	0.70	22.4	0.51	0.29	0.00	1.00	1.00	0.00	0.00	0.51	0.29	24.65	0.00	1681.1	301.2	560.5
20.64	10.99	1.75	32.0	0.70	22.4	0.50	0.29	0.00	1.00	1.00	0.00	0.00	0.50	0.29	24.74	0.00	1681.7	301.6	561.3
20.54	10.99	1.74	32.0	0.70	22.4	0.50	0.29	0.00	1.00	1.00	0.00	0.00	0.50	0.29	24.82	0.00	1682.2	302.0	562.0
20.44	10.99	1.74	32.0	0.70	22.4	0.50	0.29	0.00	1.00	1.00	0.00	0.00	0.50	0.29	24.91	0.00	1682.8	302.4	562.8
20.34	10.99	1.73	32.0	0.70	22.4	0.50	0.29	0.00	1.00	1.00	0.00	0.00	0.50	0.29	24.99	0.00	1683.3	302.8	563.6
20.24	10.99	1.72	32.0	0.70	22.4	0.50	0.28	0.00	1.00	1.00	0.00	0.00	0.50	0.28	25.08	0.00	1683.9	303.2	564.3
20.14	10.99	1.72	32.0	0.70	22.4	0.50	0.28	0.00	1.00	1.00	0.00	0.00	0.50	0.28	25.16	0.00	1684.4	303.6	565.1
20.04	10.99	1.71	32.0	0.70	22.4	0.49	0.28	0.00	1.00	1.00	0.00	0.00	0.49	0.28	25.25	0.00	1685.0	304.0	565.8
19.94	10.99	1.71	32.0	0.70	22.4	0.49	0.28	0.00	1.00	1.00	0.00	0.00	0.49	0.28	25.33	0.00	1685.5	304.4	566.6
19.84	10.99	1.70	32.0	0.70	22.4	0.49	0.28	0.00	1.00	1.00	0.00	0.00	0.49	0.28	25.41	0.00	1686.0	304.8	567.3
19.74	10.99	1.70	32.0	0.70	22.4	0.49	0.28	0.00	1.00	1.00	0.00	0.00	0.49	0.28	25.50	0.00	1686.6	305.2	568.0
19.64	10.99	1.69	32.0	0.70	22.4	0.49	0.28	0.00	1.00	1.00	0.00	0.00	0.49	0.28	25.58	0.00	1687.1	305.6	568.8
19.54	10.99	1.68	32.0	0.70	22.4	0.49	0.28	0.00	1.00	1.00	0.00	0.00	0.49	0.28	25.67	0.00	1687.6	306.0	569.5
19.44	10.99	1.68	32.0	0.70	22.4	-0.48	0.28	0.00	1.00	1.00	0.00	0.00	-0.48	0.28	25.75	-0.53	1687.1	306.4	569.3
19.34	10.99	1.67	32.0	0.70	22.4	-0.48	0.28	0.00	1.00	1.00	0.00	0.00	-0.48	0.28	25.84	-1.07	1686.6	306.8	569.1
19.24	10.99	1.67	32.0	0.70	22.4	-0.48	0.28	0.00	1.00	1.00	0.00	0.00	-0.48	0.28	25.92	-1.60	1686.1	307.2	568.9
19.14	10.99	1.66	32.0	0.70	22.4	-0.48	0.27	0.00	1.00	1.00	0.00	0.00	-0.48	0.27	26.01	-2.12	1685.5	307.5	568.7
19.04	10.99	1.66	32.0	0.70	22.4	-0.48	0.27	0.00	1.00	1.00	0.00	0.00	-0.48	0.27	26.09	-2.65	1685.0	307.9	568.5
18.94	10.99	1.65	32.0	0.70	22.4	-0.48	0.27	0.00	1.00	1.00	0.00	0.00	-0.48	0.27	26.17	-3.18	1684.5	308.3	568.3
18.84	10.99	1.65	32.0	0.70	22.4	-0.48	0.27	0.00	1.00	1.00	0.00	0.00	-0.48	0.27	26.26	-3.70	1683.9	308.7	568.1
18.74	10.99	1.64	32.0	0.70	22.4	-0.47	0.27	0.00	1.00	1.00	0.00	0.00	-0.47	0.27	26.34	-4.22	1683.4	309.1	567.9
18.64	10.99	1.64	32.0	0.70	22.4	-0.47	0.27	0.00	1.00	1.00	0.00	0.00	-0.47	0.27	26.43	-4.74	1682.9	309.5	567.7
18.54	10.99	1.63	32.0	0.70	22.4	-0.47	0.27	0.00	1.00	1.00	0.00	0.00	-0.47	0.27	26.51	-5.26	1682.4	309.8	567.5
18.44	10.99	1.63	32.0	0.70	22.4	-0.47	0.27	0.00	1.00	1.00	0.00	0.00	-0.47	0.27	26.60	-5.78	1681.9	310.2	567.3
18.34	10.99	1.62	32.0	0.70	22.4	-0.47	0.27	0.00	1.00	1.00	0.00	0.00	-0.47	0.27	26.68	-6.29	1681.4	310.6	567.2
18.24	10.99	1.62	32.0	0.70	22.4	-0.47	0.27	0.00	1.00	1.00	0.00	0.00	-0.47	0.27	26.77	-6.81	1680.8	311.0	567.0
18.14	10.99	1.61	32.0	0.70	22.4	-0.46	0.27	0.00	1.00	1.00	0.00	0.00	-0.46	0.27	26.85	-7.32	1680.3	311.4	566.8
18.04	10.99	1.61	32.0	0.70	22.4	-0.46	0.26	0.00	1.00	1.00	0.00	0.00	-0.46	0.26	26.93	-7.83	1679.8	311.7	566.6
17.94	10.99	1.60	32.0	0.70	22.4	-0.46	0.26	0.00	1.00	1.00	0.00	0.00	-0.46	0.26	27.02	-8.34	1679.3	312.1	566.4
17.84	10.99	1.60	32.0	0.70	22.4	-0.46	0.26	0.00	1.00	1.00	0.00	0.00	-0.46	0.26	27.10	-8.85	1678.8	312.5	566.2
17.74	10.99	1.59	32.0	0.70	22.4	-0.46	0.26	0.00	1.00	1.00	0.00	0.00	-0.46	0.26	27.19	-9.35	1678.3	312.8	566.0
17.64	10.99	1.58	32.0	0.70	22.4	-0.46	0.26	0.00	1.00	1.00	0.00	0.00	-0.46	0.26	27.27	-9.85	1677.8	313.2	565.8
17.54	10.99	1.58	32.0	0.70	22.4	-0.46	0.26	0.00	1.00	1.00	0.00	0.00	-0.46	0.26	27.36	-10.36	1677.3	313.6	565.6
17.43	10.99	1.57	32.0	0.70	22.4	-0.45	0.26	0.00	1.00	1.00	0.00	0.00	-0.45	0.26	27.44	-10.86	1676.8	314.0	565.4
17.33	10.99	1.57	32.0	0.70	22.4	-0.45	0.26	0.00	1.00	1.00	0.00	0.00	-0.45	0.26	27.53	-11.35	1676.3	314.3	565.3
17.23	10.99	1.56	32.0	0.70	22.4	-0.45	0.26	0.00	1.00	1.00	0.00	0.00	-0.45	0.26	27.61	-11.85	1675.8	314.7	565.1
17.13	10.99	1.56	32.0	0.70	22.4	-0.45	0.26	0.00	1.00	1.00	0.00	0.00	-0.45	0.26	27.69	-12.35	1675.3	315.1	564.9
17.03	10.99	1.55	32.0	0.70	22.4	-0.45	0.26	0.00	1.00	1.00	0.00	0.00	-0.45	0.26	27.78	-12.84	1674.8	315.4	564.7
16.93	10.99	1.55	32.0	0.70	22.4	-0.45	0.26	0.00	1.00	1.00	0.00	0.00	-0.45	0.26	27.86	-13.33	1674.3	315.8	564.5
16.83	10.99	1.54	32.0	0.70	22.4	-0.45	0.25	0.00	1.00	1.00	0.00	0.00	-0.45	0.25	27.95	-13.82	1673.8	316.2	564.3
16.73	10.99	1.54	32.0	0.70	22.4	-0.44	0.25	0.00	1.00	1.00	0.00	0.00	-0.44	0.25	28.03	-14.31	1673.3	316.5	564.1
16.63	10.99	1.53	32.0	0.70	22.4	-0.44	0.25	0.00	1.00	1.00	0.00	0.00	-0.44	0.25	28.12	-14.80	1672.8	316.9	564.0
16.53	10.99	1.53	32.0	0.70	22.4	-0.44	0.25	0.00	1.00	1.00	0.00	0.00	-0.44	0.25	28.20	-15.28	1672.4	317.3	563.8
16.43	10.99	1.52	32.0	0.70	22.4	-0.44	0.25	0.00	1.00	1.00	0.00	0.00	-0.44	0.25	28.29	-15.77	1671.9	317.6	563.6

16.33	10.99	1.52	32.0	0.70	22.4	-0.44	0.25	0.00	1.00	1.00	0.00	0.00	-0.44	0.25	28.37	-16.25	1671.4	318.0	563.4
16.23	10.99	1.51	32.0	0.70	22.4	-0.44	0.25	0.00	1.00	1.00	0.00	0.00	-0.44	0.25	28.45	-16.73	1670.9	318.3	563.2
16.13	10.99	1.51	32.0	0.70	22.4	-0.43	0.25	0.00	1.00	1.00	0.00	0.00	-0.43	0.25	28.54	-17.21	1670.4	318.7	563.1
16.03	10.99	1.50	32.0	0.70	22.4	-0.43	0.25	0.00	1.00	1.00	0.00	0.00	-0.43	0.25	28.62	-17.68	1670.0	319.0	562.9
15.93	10.99	1.50	32.0	0.70	22.4	-0.43	0.25	0.00	1.00	1.00	0.00	0.00	-0.43	0.25	28.71	-18.16	1669.5	319.4	562.7
15.83	10.99	1.49	32.0	0.70	22.4	-0.43	0.25	0.00	1.00	1.00	0.00	0.00	-0.43	0.25	28.79	-18.63	1669.0	319.8	562.5
15.73	10.99	1.48	32.0	0.70	22.4	-0.43	0.24	0.00	1.00	1.00	0.00	0.00	-0.43	0.24	28.88	-19.10	1668.5	320.1	562.4
15.63	10.99	1.48	32.0	0.70	22.4	-0.43	0.24	0.00	1.00	1.00	0.00	0.00	-0.43	0.24	28.96	-19.57	1668.1	320.5	562.2
15.53	10.99	1.47	32.0	0.70	22.4	-0.43	0.24	0.00	1.00	1.00	0.00	0.00	-0.43	0.24	29.05	-20.04	1667.6	320.8	562.0
15.43	10.99	1.47	32.0	0.70	22.4	-0.42	0.24	0.00	1.00	1.00	0.00	0.00	-0.42	0.24	29.13	-20.51	1667.1	321.2	561.8
15.33	10.99	1.46	32.0	0.70	22.4	-0.42	0.24	0.00	1.00	1.00	0.00	0.00	-0.42	0.24	29.21	-20.97	1666.7	321.5	561.6
15.23	10.99	1.46	32.0	0.70	22.4	-0.42	0.24	0.00	1.00	1.00	0.00	0.00	-0.42	0.24	29.30	-21.44	1666.2	321.9	561.5
15.13	10.99	1.45	32.0	0.70	22.4	-0.42	0.24	0.00	1.00	1.00	0.00	0.00	-0.42	0.24	29.38	-21.90	1665.7	322.2	561.3
15.03	10.99	1.45	32.0	0.70	22.4	-0.42	0.24	0.00	1.00	1.00	0.00	0.00	-0.42	0.24	29.47	-22.36	1665.3	322.6	561.1
14.93	10.99	1.44	32.0	0.70	22.4	-0.42	0.24	0.00	1.00	1.00	0.00	0.00	-0.42	0.24	29.55	-22.82	1664.8	322.9	561.0
14.83	10.99	1.44	32.0	0.70	22.4	-0.41	0.24	0.00	1.00	1.00	0.00	0.00	-0.41	0.24	29.64	-23.27	1664.4	323.3	560.8
14.73	10.99	1.43	32.0	0.70	22.4	-0.41	0.24	0.00	1.00	1.00	0.00	0.00	-0.41	0.24	29.72	-23.73	1663.9	323.6	560.6
14.63	10.99	1.43	32.0	0.70	22.4	-0.41	0.24	0.00	1.00	1.00	0.00	0.00	-0.41	0.24	29.81	-24.18	1663.5	323.9	560.4
14.53	10.99	1.42	32.0	0.70	22.4	-0.41	0.23	0.00	1.00	1.00	0.00	0.00	-0.41	0.23	29.89	-24.63	1663.0	324.3	560.3
14.43	10.99	1.42	32.0	0.70	22.4	-0.41	0.23	0.00	1.00	1.00	0.00	0.00	-0.41	0.23	29.97	-25.08	1662.6	324.6	560.1
14.33	10.99	1.41	32.0	0.70	22.4	-0.41	0.23	0.00	1.00	1.00	0.00	0.00	-0.41	0.23	30.06	-25.53	1662.1	325.0	559.9
14.23	10.99	1.41	32.0	0.70	22.4	-0.41	0.23	0.00	1.00	1.00	0.00	0.00	-0.41	0.23	30.14	-25.98	1661.7	325.3	559.8
14.13	10.99	1.40	32.0	0.70	22.4	-0.40	0.23	0.00	1.00	1.00	0.00	0.00	-0.40	0.23	30.23	-26.42	1661.2	325.6	559.6
14.03	10.99	1.39	32.0	0.70	22.4	-0.40	0.23	0.00	1.00	1.00	0.00	0.00	-0.40	0.23	30.31	-26.87	1660.8	326.0	559.4
13.93	10.99	1.39	32.0	0.70	22.4	-0.40	0.23	0.00	1.00	1.00	0.00	0.00	-0.40	0.23	30.40	-27.31	1660.3	326.3	559.3
13.83	10.99	1.38	32.0	0.70	22.4	-0.40	0.23	0.00	1.00	1.00	0.00	0.00	-0.40	0.23	30.48	-27.75	1659.9	326.7	559.1
13.73	10.99	1.38	32.0	0.70	22.4	-0.40	0.23	0.00	1.00	1.00	0.00	0.00	-0.40	0.23	30.57	-28.19	1659.5	327.0	558.9
13.63	10.99	1.37	32.0	0.70	22.4	-0.40	0.23	0.00	1.00	1.00	0.00	0.00	-0.40	0.23	30.65	-28.62	1659.0	327.3	558.8
13.53	10.99	1.37	32.0	0.70	22.4	-0.39	0.23	0.00	1.00	1.00	0.00	0.00	-0.39	0.23	30.73	-29.06	1658.6	327.7	558.6
13.43	10.99	1.36	32.0	0.70	22.4	-0.39	0.22	0.00	1.00	1.00	0.00	0.00	-0.39	0.22	30.82	-29.49	1658.2	328.0	558.5
13.33	10.99	1.36	32.0	0.70	22.4	-0.39	0.22	0.00	1.00	1.00	0.00	0.00	-0.39	0.22	30.90	-29.92	1657.7	328.3	558.3
13.23	10.99	1.35	32.0	0.70	22.4	-0.39	0.22	0.00	1.00	1.00	0.00	0.00	-0.39	0.22	30.99	-30.35	1657.3	328.7	558.1
13.13	10.99	1.35	32.0	0.70	22.4	-0.39	0.22	0.00	1.00	1.00	0.00	0.00	-0.39	0.22	31.07	-30.78	1656.9	329.0	558.0
13.03	10.99	1.34	32.0	0.70	22.4	-0.39	0.22	0.00	1.00	1.00	0.00	0.00	-0.39	0.22	31.16	-31.21	1656.4	329.3	557.8
12.93	10.99	1.34	32.0	0.70	22.4	-0.39	0.22	0.00	1.00	1.00	0.00	0.00	-0.39	0.22	31.24	-31.63	1656.0	329.6	557.7
12.83	10.99	1.33	32.0	0.70	22.4	-0.38	0.22	0.00	1.00	1.00	0.00	0.00	-0.38	0.22	31.33	-32.06	1655.6	330.0	557.5
12.73	10.99	1.33	32.0	0.70	22.4	-0.38	0.22	0.00	1.00	1.00	0.00	0.00	-0.38	0.22	31.41	-32.48	1655.2	330.3	557.3
12.63	10.99	1.32	32.0	0.70	22.4	-0.38	0.22	0.00	1.00	1.00	0.00	0.00	-0.38	0.22	31.49	-32.90	1654.7	330.6	557.2
12.53	10.99	1.32	32.0	0.70	22.4	-0.38	0.22	0.00	1.00	1.00	0.00	0.00	-0.38	0.22	31.58	-33.32	1654.3	330.9	557.0
12.42	10.99	1.31	32.0	0.70	22.4	-0.38	0.22	0.00	1.00	1.00	0.00	0.00	-0.38	0.22	31.66	-33.73	1653.9	331.3	556.9
12.32	10.99	1.31	32.0	0.70	22.4	-0.38	0.22	0.00	1.00	1.00	0.00	0.00	-0.38	0.22	31.75	-34.15	1653.5	331.6	556.7
12.22	10.99	1.30	32.0	0.70	22.4	-0.38	0.21	0.00	1.00	1.00	0.00	0.00	-0.38	0.21	31.83	-34.56	1653.1	331.9	556.6
12.12	10.99	1.29	32.0	0.70	22.4	-0.37	0.21	0.00	1.00	1.00	0.00	0.00	-0.37	0.21	31.92	-34.97	1652.7	332.2	556.4
12.02	10.99	1.29	32.0	0.70	22.4	-0.37	0.21	0.00	1.00	1.00	0.00	0.00	-0.37	0.21	32.00	-35.38	1652.3	332.5	556.2
11.92	10.99	1.28	0.0	0.70	0.0	0.00	0.00	0.50	1.00	1.00	-0.50	0.50	-0.50	0.50	32.09	-35.93	1651.7	333.2	556.2
11.82	10.99	1.27	0.0	0.70	0.0	0.00	0.00	0.50	1.00	1.00	-0.50	0.50	-0.50	0.50	32.17	-36.48	1651.2	333.8	556.2
11.72	10.99	1.25	0.0	0.70	0.0	0.00	0.00	0.50	1.00	1.00	-0.50	0.50	-0.50	0.50	32.25	-37.03	1650.6	334.4	556.2
11.62	10.99	1.24	0.0	0.70	0.0	0.00	0.00	0.50	1.00	1.00	-0.50	0.50	-0.50	0.50	32.34	-37.58	1650.1	335.1	556.2
11.52	10.99	1.23	0.0	0.70	0.0	0.00	0.00	0.50	1.00	1.00	-0.50	0.50	-0.50	0.50	32.42	-38.13	1649.5	335.7	556.2
11.42	10.99	1.22	0.0	0.70	0.0	0.00	0.00	0.50	1.00	1.00	-0.50	0.50	-0.50	0.50	32.51	-38.69	1649.0	336.3	556.2
11.32	10.99	1.21	0.0	0.70	0.0	0.00	0.00	0.50	1.00	1.00	-0.50	0.50	-0.50	0.50	32.59	-39.24	1648.4	337.0	556.2
11.22	10.99	1.20	0.0	0.70	0.0	0.00	0.00	0.50	1.00	1.00	-0.50	0.50	-0.50	0.50	32.68	-39.79	1647.9	337.6	556.2
11.12	10.99	1.18	0.0	0.70	0.0	0.00	0.00	0.50	1.00	1.00	-0.50	0.50	-0.50	0.50	32.76	-40.34	1647.3	338.3	556.2
11.02	10.99	1.17	0.0	0.70	0.0	0.00	0.00	0.50	1.00	1.00	-0.50	0.50	-0.50	0.50	32.85	-40.89	1646.8	338.9	556.2
10.92	10.99	1.16	0.0	0.70	0.0	0.00	0.00	0.50	1.00	1.00	-0.50	0.50	-0.50	0.50	32.93	-41.44	1646.2	339.5	556.2
10.82	10.99	1.15	0.0	0.70	0.0	0.00	0.00	0.50	1.00	1.00	-0.50	0.50	-0.50	0.50	33.01	-41.99	1645.7	340.2	556.2
10.72	10.99	1.14	0.0	0.70	0.0	0.00	0.00	0.50	1.00	1.00	-0.50	0.50	-0.50	0.50	33.10	-42.54	1645.1	340.8	556.2
10.62	10.99	1.13	0.0	0.70	0.0	0.00	0.00	0.50	1.00	1.00	-0.50	0.50	-0.50	0.50	33.18	-43.09	1644.6	341.4	556.2
10.52	10.99	1.11	0.0	0.70	0.0	0.00	0.00	0.50	1.00	1.00	-0.50	0.50	-0.50	0.50	33.27	-43.64	1644.0	342.1	556.2
10.42	10.99	1.10	0.0	0.70	0.0	0.00	0.00	0.50	1.00	1.00	-0.50	0.50	-0.50	0.50	33.35	-44.19	1643.5	342.7	556.2
10.32	10.99	1.09	0.0	0.70	0.0	0.00	0.00	0.50	1.00	1.00	-0.50	0.50	-0.50	0.50	33.44	-44.74	1642.9	343.3	556.2
10.22	10.99	1.08	0.0	0.70	0.0	0.00	0.00	0.50	1.00	1.00	-0.50	0.50	-0.50	0.50	33.52	-45.29	1642.4	344.0	556.2
10.12	10.99	1.07	0.0	0.70	0.0	0.00	0.00	0.50	1.00	1.00	-0.50	0.50	-0.50	0.50	33.60	-45.84	1641.8	344.6	556.2
10.02	10.99	1.06	0.0	0.70	0.0	0.00	0.00	0.50	1.00	1.00	-0.50	0.50	-0.50	0.50	33.69	-46.40	1641.3	345.2	556.2
9.92	10.99	1.04	0.0	0.70	0.0	0.00	0.00	0.50	1.00	1.00	-0.50	0.50	-0.50	0.50	33.83	-46.95	1640.7	345.9	556.2
9.82	10.99	1.03	0.0	0.70	0.0	0.00	0.00	0.50	1.00	1.00	-0.50	0.50	-0.50	0.50	33.98	-47.50	1640.2	346.6	556.2
9.72	10.99	1.02	0.0	0.70	0.0	0.00	0.00	0.50	1.00	1.00	-0.50	0.50	-0.50	0.50	34.12	-48.05	1639.6	347.3	556.2
9.62	10.99	1.01	0.0	0.70	0.0	0.00	0.00	0.50	1.00	1.00	-0.50	0.50	-0.50	0.50	34.27	-48.60	1639.0	348.0	556.2
9.52	10.99	1.00	0.0	0.70	0.0	0.00	0.00	0.50	1.00	1.00	-0.50	0.50	-0.50	0.50	34.41	-49.15	1638.5	348.7	556.2
9.42	10.99	0.98	0.0	0.70	0.0	0.00	0.00	0.50	1.00	1.00	-0.50	0.50	-0.50	0.50	34.56	-49.70	1637.9	349.4	556.2
9.32	10.99	0.97	0.0	0.70	0.0	0.00	0.00	0.50	1.00	1.00	-0.50	0.50	-0.50	0.50	34.70	-50.25	1637.4	350.1	556.2
9.22	10.99	0.96	0.0	0.70	0.0	0.00	0.00	0.50	1.00	1.00	-0.50	0.50	-0.50	0.50	34.85	-50.80	1636.8	350.8	556.2
9.12	10.99	0.95	0.0	0.70	0.0	0.00	0.00	0.50	1.00	1.00	-0.50	0.50	-0.50	0.50	34.99	-51.35	1636.3	351.5	556.2
9.02	10.99	0.94	0.0	0.70	0.0	0.00	0.00	0.50	1.00	1.00	-0.50	0.50	-0.50	0.50	35.14	-51.90	1635.7	352.2	556.2
8.92	10.99	0.93	0.0	0.70	0.0	0.00	0.00	0.50	1.00	1.00	-0.50	0.50	-0.50	0.50	35.28	-52.45	1635.2	352.9	556.2
8.82	10.99	0.91	0.0	0.70	0.0	0.00	0.00	0.50	1.00	1.00	-0.50	0.50	-0.50	0.50	35.42	-53.00	1634.6	353.6	556.2
8.72	10.99	0.90	0.0	0.70	0.0	0.00	0.00	0.50	1.00	1.00	-0.50	0.50	-0.50	0.50	35.57	-53.55	1634.1	354.3	556.2
8.62	10.99	0.89	0.0	0.70	0.0	0.00	0.00	0.50	1.00	1.00	-0.50	0.50	-0.50	0.50	35.71	-54.10	1633.5	355.0	556.2
8.52	10.99	0.88	0.0	0.70	0.0	0.00	0.00	0.50	1.00	1.00	-0.50	0.50	-0.50	0.50	35.86	-54.66	1633.0	355.7	556.2
8.42	10.99	0.87	0.0	0.70	0.0	0.00	0.00	0.50	1.00	1.00	-0.50	0.50	-0.50	0.50	36.00	-55.21	1632.4	356.4	556.2
8.32	10.99	0.86	0.0	0.70	0.0	0.00	0.00	0.50	1.00	1.00	-0.50	0.50	-0.50	0.50	36.15	-55.76	1631.9	357.1	556.2
8.22	10.99	0.84	0.0	0.70	0.0	0.00	0.00	0.50	1.00	1.00	-0.50	0.50	-0.50	0.50	36.29	-56.31	1631.3	357.8	556.2
8.12	10.99	0.83	0.0	0.70	0.0	0.00	0.00	0.50	1.00	1.00	-0.50	0.50	-0.50	0.50	36.44	-56.86	1630.8	358.5	556.2
8.02	10.99	0.82	0.0	0.70	0.0	0.00	0.00	0.50	1.00	1.00	-0.50	0.50	-0.50	0.50	36.58	-57.41	1630.2	359.1	556.2
7.92	10.99	0.81	0.0	0.70	0.0	0.00	0.00	0.50	1.00	1.00	-0.50	0.50	-0.50	0.50	36.73	-57.96	1629.7	359.8	556.2
7.82	10.99	0.80	0.0	0.70	0.0	0.00	0.00	0.50	1.00	1.00	-0.50	0.50	-0.50	0.50	36.87	-58.51	1629.1	360.5	556.2
7.72	10.99	0.79	0.0	0.70	0.0	0.00	0.00	0.50	1.00	1.00	-0.50	0.50	-0.50	0.50	37.01	-59.06	1628.6	361.2	556.2
7.62	10.99	0.77	0.0	0.70	0.0	0.00	0.00	0.50	1.00	1.00	-0.50	0.50	-0.50	0.50	37.16	-59.61	1628.0	361.9	556.2
7.52	10.99	0.76	0.0	0.70	0.0	0.00	0.00	0.50	1.00	1.00	-0.50	0.50	-0.50	0.50	37.30	-60.16	1627.5	362.6	556.2
7.41	10.99	0.75	0.0	0.70	0.0	0.00	0.00	0.50	1.00	1.00	-0.50	0.50	-0.50	0.50	37.45	-60.71	1626.9	363.3	556.2
7.31	10.99	0.74	0.0	0.70	0.0	0.00	0.00	0.50	1.00	1.00	-0.50	0.50	-0.50	0.50	37.59	-61.26	1626.4	364.0	556.2
7.21	10.99	0.73	0.0	0.70	0.0	0.00	0.00	0.50	1.00	1.00	-0.50	0.50	-0.50	0.50	37.74	-61.81	1625.8	364.7	556.2
7.11	10.99	0.72	0.0	0.70	0.0	0.00	0.00	0.50	1.00	1.00	-0.50	0.50	-0.50	0.50	37.88	-62.37	1625.3	365.4	556.2
7.01	10.99	0.70	0.0	0.70	0.0	0.00	0.00	0.50	1.00	1.00	-0.50	0.50	-0.50	0.50	38.03	-62.92	1624.7	366.1	556.2
6.91	10.99	0.69	0.0	0.70	0.0	0.00	0.00	0.50	1.00	1.00	-0.50	0.50	-0.50	0.50	38.17	-63.47	1624.2	366.8	556.2
6.81	10.99	0.68	0.0	0.70	0.0	0.00	0.00	0.50	1.00	1.00	-0.50	0.50	-0.50	0.50	38.32	-64.02	1623.6	367.5	556.2
6.71	10.99	0.67	0.0	0.70	0.0	0.00	0.00	0.50	1.00	1.00	-0.50	0.50	-0.50	0.50	38.46	-64.57	1623.1	368.2	556.2
6.61	10.99	0.66	0.0	0.70	0.0	0.00	0.00	0.50	1.00	1.00	-0.50	0.50	-0.50	0.50	38.61	-65.12	1622.5	368.9	556.2
6.51	10.99	0.64	0.0	0.70	0.0	0.00	0.00	0.50	1.00	1.00	-0.50	0.50	-0.50	0.50	38.75	-65.67	1622.0	369.6	556.2
6.41	10.99	0.63	0.0	0.70	0.0	0.00	0.00	0.50	1.00	1.00	-0.50	0.50	-0.50	0.50	38.89	-66.22	1621.4	370.3	556.2
6.31	10.99	0.62	0.0	0.70	0.0	0.00	0.00	0.50	1.00	1.00	-0.50	0.50	-0.50	0.50	39.04	-66.77	1620.9	371.0	556.2
6.21	10.99	0.61	0.0	0.70	0.0	0.00	0.00	0.50	1.00	1.00	-0.50	0.50	-0.50	0.50	39.18	-67.32	1620.3	371.7	556.2
6.11	10.99	0.60	0.0	0.70	0.0	0.00	0.00	0.50	1.00	1.00	-0.50	0.50	-0.50	0.50	39.33	-67.87	1619.8	372.4	556.2
6.01	10.99	0.59	0.0	0.70	0.0	0.00	0.00	0.50	1.00	1.00	-0.50	0.50	-0.50	0.50	39.47	-68.42	1619.2	373.1	556.2
5.91	10.99	0.57	0.0	0.70	0.0	0.00	0.00	0.50	1.00	1.00	-0.50	0.50	-0.50	0.50	39.62	-68.97	1618.7	373.7	556.2
5.81	10.99	0.56	0.0	0.70	0.0	0.00	0.00	0.50	1.00	1.00	-0.50	0.50	-0.50	0.50	39.76	-69.52	1618.1	374.4	556.2
5.71	10.99	0.55	0.0	0.70	0.0	0.00	0.00	0.50	1.00	1.00	-0.50	0.50	-0.50	0.50	39.91	-70.07	1617.6	375.1	556.2
5.61	10.99	0.54	0.0	0.70	0.0	0.00	0.00	0.50	1.00	1.00	-0.50	0.50	-0.50	0.50	40.05	-70.63	1617.0	375.8	556.2
5.51	10.99	0.53	0.0	0.70	0.0	0.00	0.00	0.50	1.00	1.00	-0.50	0.50	-0.50	0.50	40.20	-71.18	1616.5	376.5	556.2
5.41	10.99	0.52	0.0	0.70	0.0	0.00	0.00	0.50	1.00	1.00	-0.50	0.50	-0.50	0.50	40.34	-71.73	1615.9	377.2	556.2
5.31	10.99	0.50	0.0	0.70	0.0	0.00	0.00	0.50	1.00	1.00	-0.50	0.50	-0.50	0.50	40.49	-72.28	1615.4	377.9	556.2
5.21	10.99	0.49	0.0	0.70	0.0	0.00	0.00	0.50	1.00	1.00	-0.50	0.50	-0.50	0.50	40.63	-72.83	1614.8	378.6	556.2
5.11	10.99	0.48	0.0	0.70	0.0	0.00	0.00	0.50	1.00	1.00	-0.50	0.50	-0.50	0.50	40.77	-73.38	1614.3	379.3	556.2
5.01	10.99	0.47	0.0	0.70	0.0	0.00	0.00	0.50	1.00	1.00	-0.50	0.50	-0.50	0.50	40.92	-73.93	1613.7	380.0	556.2
4.91	10.99	0.46	0.0	0.70	0.0	0.00	0.00	0.50	1.00	1.00	-0.50	0.50	-0.50	0.50	41.06	-74.48	1613.2	380.7	556.2
4.81	10.99	0.45	0.0	0.70	0.0	0.00	0.00	0.50	1.00	1.00	-0.50	0.50	-0.50	0.50	41.21	-75.03	1612.6	381.4	556.2
4.71	10.99	0.43	0.0	0.70	0.0	0.00	0.00	0.50	1.00	1.00	-0.50	0.50	-0.50	0.50	41.35	-75.58	1612.1	382.1	556.2

4.61	10.99	0.42	0.0	0.70	0.0	0.00	0.00	0.50	1.00	1.00	-0.50	0.50	-0.50	0.50	41.50	-76.13	1611.5	382.8	556.2
4.51	10.99	0.41	0.0	0.70	0.0	0.00	0.00	0.50	1.00	1.00	-0.50	0.50	-0.50	0.50	41.64	-76.68	1611.0	383.5	556.2
4.41	10.99	0.40	0.0	0.70	0.0	0.00	0.00	0.50	1.00	1.00	0.00	0.00	0.00	0.00	41.79	-76.68	1611.0	383.6	556.2
4.31	10.99	0.39	0.0	0.70	0.0	0.00	0.00	0.50	1.00	1.00	0.00	0.00	0.00	0.00	41.93	-76.68	1611.0	383.8	556.2
4.21	10.99	0.38	0.0	0.70	0.0	0.00	0.00	0.50	1.00	1.00	0.00	0.00	0.00	0.00	42.08	-76.68	1611.0	383.9	556.2
4.11	10.99	0.37	0.0	0.70	0.0	0.00	0.00	0.50	1.00	1.00	0.00	0.00	0.00	0.00	42.22	-76.68	1611.0	384.1	556.2
4.01	10.99	0.37	0.0	0.70	0.0	0.00	0.00	0.50	1.00	1.00	0.00	0.00	0.00	0.00	42.36	-76.68	1611.0	384.2	556.2
3.91	10.99	0.36	0.0	0.70	0.0	0.00	0.00	0.50	1.00	1.00	0.00	0.00	0.00	0.00	42.51	-76.68	1611.0	384.3	556.2
3.81	10.99	0.35	0.0	0.70	0.0	0.00	0.00	0.50	1.00	1.00	0.00	0.00	0.00	0.00	42.65	-76.68	1611.0	384.5	556.2
3.71	10.99	0.34	0.0	0.70	0.0	0.00	0.00	0.50	1.00	1.00	0.00	0.00	0.00	0.00	42.80	-76.68	1611.0	384.6	556.2
3.61	10.99	0.33	0.0	0.70	0.0	0.00	0.00	0.50	1.00	1.00	0.00	0.00	0.00	0.00	42.94	-76.68	1611.0	384.8	556.2
3.51	10.99	0.32	0.0	0.70	0.0	0.00	0.00	0.50	1.00	1.00	0.00	0.00	0.00	0.00	43.09	-76.68	1611.0	384.9	556.2
3.41	10.99	0.31	0.0	0.70	0.0	0.00	0.00	0.50	1.00	1.00	0.00	0.00	0.00	0.00	43.23	-76.68	1611.0	385.1	556.2
3.31	10.99	0.30	0.0	0.70	0.0	0.00	0.00	0.50	1.00	1.00	0.00	0.00	0.00	0.00	43.38	-76.68	1611.0	385.2	556.2
3.21	10.99	0.29	0.0	0.70	0.0	0.00	0.00	0.50	1.00	1.00	0.00	0.00	0.00	0.00	43.52	-76.68	1611.0	385.4	556.2
3.11	10.99	0.28	0.0	0.70	0.0	0.00	0.00	0.50	1.00	1.00	0.00	0.00	0.00	0.00	43.67	-76.68	1611.0	385.5	556.2
3.01	10.99	0.28	0.0	0.70	0.0	0.00	0.00	0.50	1.00	1.00	0.00	0.00	0.00	0.00	43.81	-76.68	1611.0	385.6	556.2
2.91	10.99	0.27	0.0	0.70	0.0	0.00	0.00	0.50	1.00	1.00	0.00	0.00	0.00	0.00	43.96	-76.68	1611.0	385.8	556.2
2.81	10.99	0.26	0.0	0.70	0.0	0.00	0.00	0.50	1.00	1.00	0.00	0.00	0.00	0.00	44.10	-76.68	1611.0	385.9	556.2
2.71	10.99	0.25	0.0	0.70	0.0	0.00	0.00	0.50	1.00	1.00	0.00	0.00	0.00	0.00	44.24	-76.68	1611.0	386.1	556.2
2.61	10.99	0.24	0.0	0.70	0.0	0.00	0.00	0.50	1.00	1.00	0.00	0.00	0.00	0.00	44.39	-76.68	1611.0	386.2	556.2
2.51	10.99	0.23	0.0	0.70	0.0	0.00	0.00	0.50	1.00	1.00	0.00	0.00	0.00	0.00	44.53	-76.68	1611.0	386.4	556.2
2.40	10.99	0.22	0.0	0.70	0.0	0.00	0.00	0.50	1.00	1.00	0.00	0.00	0.00	0.00	44.68	-76.68	1611.0	386.5	556.2
2.30	10.99	0.21	0.0	0.70	0.0	0.00	0.00	0.50	1.00	1.00	0.00	0.00	0.00	0.00	44.82	-76.68	1611.0	386.7	556.2
2.20	10.99	0.20	0.0	0.70	0.0	0.00	0.00	0.50	1.00	1.00	0.00	0.00	0.00	0.00	44.97	-76.68	1611.0	386.8	556.2
2.10	10.99	0.19	0.0	0.70	0.0	0.00	0.00	0.50	1.00	1.00	0.00	0.00	0.00	0.00	45.11	-76.68	1611.0	387.0	556.2
2.00	10.99	0.18	0.0	0.70	0.0	0.00	0.00	0.50	1.00	1.00	0.00	0.00	0.00	0.00	45.26	-76.68	1611.0	387.1	556.2
1.90	10.99	0.18	0.0	0.70	0.0	0.00	0.00	0.50	1.00	1.00	0.00	0.00	0.00	0.00	45.40	-76.68	1611.0	387.2	556.2
1.80	10.99	0.17	0.0	0.70	0.0	0.00	0.00	0.50	1.00	1.00	0.00	0.00	0.00	0.00	45.55	-76.68	1611.0	387.4	556.2
1.70	10.99	0.16	0.0	0.70	0.0	0.00	0.00	0.50	1.00	1.00	0.00	0.00	0.00	0.00	45.69	-76.68	1611.0	387.5	556.2
1.60	10.99	0.15	0.0	0.70	0.0	0.00	0.00	0.50	1.00	1.00	0.00	0.00	0.00	0.00	45.83	-76.68	1611.0	387.7	556.2
1.50	10.99	0.14	0.0	0.70	0.0	0.00	0.00	0.50	1.00	1.00	0.00	0.00	0.00	0.00	45.98	-76.68	1611.0	387.8	556.2
1.40	10.99	0.13	0.0	0.70	0.0	0.00	0.00	0.50	1.00	1.00	0.00	0.00	0.00	0.00	46.12	-76.68	1611.0	388.0	556.2
1.30	10.99	0.12	0.0	0.70	0.0	0.00	0.00	0.50	1.00	1.00	0.00	0.00	0.00	0.00	46.27	-76.68	1611.0	388.1	556.2
1.20	10.99	0.11	0.0	0.70	0.0	0.00	0.00	0.50	1.00	1.00	0.00	0.00	0.00	0.00	46.41	-76.68	1611.0	388.3	556.2
1.10	10.99	0.10	0.0	0.70	0.0	0.00	0.00	0.50	1.00	1.00	0.00	0.00	0.00	0.00	46.56	-76.68	1611.0	388.4	556.2
1.00	10.99	0.09	0.0	0.70	0.0	0.00	0.00	0.50	1.00	1.00	0.00	0.00	0.00	0.00	46.70	-76.68	1611.0	388.5	556.2
0.90	10.99	0.09	0.0	0.70	0.0	0.00	0.00	0.50	1.00	1.00	0.00	0.00	0.00	0.00	46.85	-76.68	1611.0	388.7	556.2
0.80	10.99	0.08	0.0	0.70	0.0	0.00	0.00	0.50	1.00	1.00	0.00	0.00	0.00	0.00	46.99	-76.68	1611.0	388.8	556.2
0.70	10.99	0.07	0.0	0.70	0.0	0.00	0.00	0.50	1.00	1.00	0.00	0.00	0.00	0.00	47.14	-76.68	1611.0	389.0	556.2
0.60	10.99	0.06	0.0	0.70	0.0	0.00	0.00	0.50	1.00	1.00	0.00	0.00	0.00	0.00	47.28	-76.68	1611.0	389.1	556.2
0.50	10.99	0.05	0.0	0.70	0.0	0.00	0.00	0.50	1.00	1.00	0.00	0.00	0.00	0.00	47.43	-76.68	1611.0	389.3	556.2
0.40	10.99	0.04	0.0	0.70	0.0	0.00	0.00	0.50	1.00	1.00	0.00	0.00	0.00	0.00	47.57	-76.68	1611.0	389.4	556.2
0.30	10.99	0.03	0.0	0.70	0.0	0.00	0.00	0.50	1.00	1.00	0.00	0.00	0.00	0.00	47.71	-76.68	1611.0	389.6	556.2
0.20	10.99	0.02	0.0	0.70	0.0	0.00	0.00	0.50	1.00	1.00	0.00	0.00	0.00	0.00	47.86	-76.68	1611.0	389.7	556.2
0.10	10.99	0.01	0.0	0.70	0.0	0.00	0.00	0.50	1.00	1.00	0.00	0.00	0.00	0.00	48.00	-76.68	1611.0	389.8	556.2
0.00	10.99	0.00	0.0	0.70	0.0	0.00	0.00	0.50	1.00	1.00	0.00	0.00	0.00	0.00	48.15	-76.68	1611.0	390.0	556.2

SETTLEMENT based on Ultimate Loading by Vesic Method (1977):
Ztip=50.00 Btip= 3.50 Cp= 0.135 Cs= 0.207
Xpp=4.453-in Xps= 0.107-in Xtip= 4.560-in
Cp & Cs are average value at bearing stratum from pile tip extend to 4 Btip

At loading: Qtip=1316.9-kp Qtop= 1611.0-kp Qside= 294.1-kp
Xtip=4.560-in Xtop= 4.786-in Xshaft= 0.226-in

LOAD - TOTAL SETTLEMENT RELATION (from t-z, and q-w curves):
Based on Vesic Method (1977)

Xtop -in	Xshaft -in	Xtip -in	Qtip -kp	Qside -kp	Qtotal -kp
0.0003	0.0003	0.0000	1.7	0.9	2.6
0.0322	0.0067	0.0255	20.7	52.1	72.8
0.0635	0.0126	0.0509	39.7	95.7	135.3
0.0944	0.0180	0.0764	58.7	132.6	191.3
0.1249	0.0230	0.1018	77.7	163.7	241.4
0.1549	0.0276	0.1273	96.7	189.7	286.4
0.1847	0.0319	0.1527	115.7	211.3	326.9
0.2142	0.0360	0.1782	134.6	229.0	363.6
0.2434	0.0397	0.2037	153.4	243.6	397.0
0.2724	0.0433	0.2291	172.2	255.3	427.5
0.3012	0.0467	0.2546	190.9	264.7	455.6
0.3299	0.0499	0.2800	209.5	272.2	481.7
0.3585	0.0530	0.3055	228.0	278.0	506.1
0.3869	0.0560	0.3309	246.4	282.6	529.0
0.4153	0.0589	0.3564	264.7	286.0	550.7
0.4435	0.0617	0.3819	282.8	288.6	571.4
0.4717	0.0644	0.4073	300.7	290.5	591.2
0.4998	0.0671	0.4328	318.6	291.9	610.4
0.5279	0.0697	0.4582	336.2	292.8	629.0
0.5559	0.0722	0.4837	353.7	293.4	647.2
0.5839	0.0748	0.5091	371.0	293.8	664.9
0.6119	0.0773	0.5346	388.1	294.0	682.2
0.6398	0.0797	0.5601	405.1	294.1	699.2
0.6676	0.0821	0.5855	421.8	294.0	715.9
0.6955	0.0845	0.6110	438.4	293.9	732.3
0.7233	0.0868	0.6364	454.7	293.6	748.3
0.7510	0.0891	0.6619	470.9	293.3	764.1
0.7788	0.0914	0.6874	486.8	292.8	779.6
0.8065	0.0936	0.7128	502.5	292.2	794.8
0.8341	0.0958	0.7383	518.0	291.6	809.6
0.8617	0.0980	0.7637	533.3	290.8	824.2
0.8893	0.1001	0.7892	548.4	290.0	838.4
0.9168	0.1022	0.8146	563.3	289.0	852.3
0.9443	0.1042	0.8401	577.9	288.1	865.9
0.9718	0.1062	0.8656	592.3	287.1	879.4
0.9992	0.1082	0.8910	606.5	286.1	892.6
1.0266	0.1102	0.9165	620.4	285.3	905.7
1.0540	0.1121	0.9419	634.1	284.6	918.7
1.0814	0.1141	0.9674	647.7	284.9	932.5
1.1088	0.1160	0.9928	660.9	284.6	945.5
1.1361	0.1178	1.0183	674.0	284.2	958.2
1.1634	0.1196	1.0438	686.8	283.9	970.7
1.1906	0.1214	1.0692	699.5	283.5	982.9
1.2179	0.1232	1.0947	711.8	283.0	994.8
1.2450	0.1249	1.1201	724.0	282.5	1006.5
1.2722	0.1266	1.1456	736.0	281.9	1017.9
1.2993	0.1283	1.1710	747.7	281.3	1029.1
1.3264	0.1299	1.1965	759.3	280.7	1040.0
1.3534	0.1315	1.2220	770.6	280.0	1050.6
1.3804	0.1330	1.2474	781.7	279.3	1061.0
1.4074	0.1345	1.2729	792.6	278.6	1071.2
1.4344	0.1360	1.2983	803.3	277.8	1081.1
1.4613	0.1375	1.3238	813.8	277.0	1090.9
1.4882	0.1389	1.3492	824.2	276.2	1100.4
1.5150	0.1403	1.3747	834.3	275.4	1109.7
1.5419	0.1417	1.4002	844.2	274.7	1118.9

1.5687	0.1430	1.4256	854.0	273.9	1127.8
1.5955	0.1444	1.4511	863.5	273.2	1136.7
1.6222	0.1457	1.4765	872.9	272.4	1145.3
1.6489	0.1470	1.5020	882.1	271.8	1153.9
1.6757	0.1482	1.5274	891.1	271.1	1162.3
1.7024	0.1495	1.5529	900.0	270.6	1170.5
1.7290	0.1507	1.5784	908.7	270.0	1178.7
1.7557	0.1519	1.6038	917.2	269.5	1186.8
1.7823	0.1530	1.6293	925.6	269.1	1194.7
1.8089	0.1542	1.6547	933.8	268.7	1202.5
1.8355	0.1553	1.6802	941.9	268.3	1210.2
1.8621	0.1565	1.7057	949.8	268.0	1217.8
1.8887	0.1576	1.7311	957.6	267.6	1225.2
1.9152	0.1586	1.7566	965.2	267.2	1232.4
1.9417	0.1597	1.7820	972.7	266.7	1239.4
1.9682	0.1607	1.8075	980.1	266.2	1246.3
1.9946	0.1617	1.8329	987.3	265.5	1252.8
2.0211	0.1627	1.8584	994.4	264.6	1259.0
2.0474	0.1636	1.8839	1001.4	263.5	1264.9
2.0738	0.1645	1.9093	1008.3	262.0	1270.3
2.1003	0.1655	1.9348	1015.0	262.9	1277.9
2.1267	0.1665	1.9602	1021.7	262.6	1284.3
2.1531	0.1674	1.9857	1028.2	262.3	1290.6
2.1794	0.1683	2.0111	1034.7	262.1	1296.7
2.2058	0.1692	2.0366	1041.0	261.8	1302.8
2.2321	0.1701	2.0621	1047.2	261.5	1308.8
2.2584	0.1709	2.0875	1053.4	261.3	1314.6
2.2848	0.1718	2.1130	1059.4	261.0	1320.4
2.3110	0.1726	2.1384	1065.4	260.7	1326.1
2.3373	0.1735	2.1639	1071.3	260.4	1331.7
2.3636	0.1743	2.1893	1077.1	260.2	1337.2
2.3899	0.1751	2.2148	1082.8	259.9	1342.7
2.4161	0.1759	2.2403	1088.4	259.6	1348.0
2.4424	0.1766	2.2657	1094.0	259.3	1353.3
2.4686	0.1774	2.2912	1099.5	259.1	1358.5
2.4948	0.1782	2.3166	1104.9	258.8	1363.7
2.5210	0.1789	2.3421	1110.2	258.5	1368.7
2.5472	0.1797	2.3675	1115.5	258.2	1373.8
2.5734	0.1804	2.3930	1120.7	258.0	1378.7
3.0643	0.1927	2.8716	1208.5	252.8	1461.3
3.5524	0.2022	3.3502	1277.1	247.7	1524.8
4.0364	0.2076	3.8288	1316.9	242.5	1559.4
4.5139	0.2064	4.3074	1311.4	237.4	1548.7
4.9835	0.1975	4.7860	1252.3	232.2	1484.5

At Qwork= 512.00-kp Settlement= 0.36585-in
At Qwork= 512.00-kp Secant Stiffness Kqx= 1399.48-kp/-in
At Xallow= 1.00-in Q= 892.96-kp
Note: If the program cannot find a result or the result exceeds the upper limit. The result will be displayed as 99999.

SUMMARY:

Total Ultimate Capacity (Down)= 1610.966-kp Total Ultimate Capacity (Up)= 389.987-kp
Total Allowable Capacity (Down)= 586.006-kp Total Allowable Capacity (Up)= 219.068-kp

Weight above Ground= 0.00 Total Pile Weight= 48.15-kp *Soil Weight is not included
Side Resistance (Down)= 294.106-kp Side Resistance (Up)= 341.839-kp
Tip Resistance (Down)= 1316.860-kp Tip Resistance (Up)= 0.000-kp
Negative Friction, Qneg= -76.683-kp, which has been subtracted from Total Ultimate Capacity (Down)
Negative friction does not affect Total Uplift Ultimate Capacity (Up)

OK! Qallow > Q * Vertical Load, Q= 512.0 -kp

FACTOR OF SAFETY:

FSside	FStip	FSup	FSweight
2.0	3.0	2.0	1.0

* FStorsion = FSside

Notes:
* Settlement in the program is Elastic Settlement only. Consolidation Settlement is not calculated!
Length - Pile length, distance from pile top to tip (not from ground surface)
Width or D - Width of pile shaft (pile diameter)
Ds and Dl - Short Side and Long Side of Footing
Area - Section area of pile shaft or tip area of pile
Sv - Vertical stress in soils (It may be limited based on critical depth, Z_lim or Z/D
qult - Ultimate tip resistance (pressure)
Qtip_dw - Ultimate downward tip resistance (Force or Capacity)
Qtip_up - Ultimate uplift tip resistance for belled pile or uplift plate (Force or Capacity)
Torsion - Ultimate torsion resistance for single pile (Capacity)
dz - Small Segment of Depth for Calculation
Zs - Soil Depth, Depth from ground surface
Zp - Pile Depth, Depth from pile top
Prem - Primer of pile shaft
Phi - Soil internal friction angle (between soils)
Kf - Friction factor to convert Phi to Delta
Delta - Ski friction between soil and pile (function of Phi. It is different from Phi)
f_dw - Downward Resistance between soil and pile from Delta
f_up - Uplift Resistance between soil and pile from Delta
C - Soil cohesion (between soils)
Ca - Adhesion between soil and pile (function of C. It is different from C) Ca=KaKcC
Ka - Adhesion ratio, C/Ca
Kc - Adhesion factor defended by users
Ca_dw - Downward adhesion between pile and soil
Ca_up - Uplift adhesion between pile and soil
Sf_dw - Downward side resistance (sum of friction and adhesion, f_dw + Ca_dw)
Sf_up - Uplift side resistance (sum of friction and adhesion, f_up + Ca_up)
Torsion side resistance = (Sf_dw+Sf_up)/2 * pile diameter/2
Weight - Weight of Pile shaft
Qneg - negative friction Resistance
Qside - Ultimate side resistance (Qside_dw or Qside_up)
Qtip - Ultimate tip resistance (Qtip_dw or Qtip_up for uplift plate)
Q_dw - Ultimate downward capacity (Qtip + Qside_dw)
Q_up - Ultimate uplift capacity (Weight + Qside_up)
E - Elastic modules
Xs - Settlement due to axial deformation of pile shaft
Xpp - Settlement due to point load from pile tip
Xps- Settlement due to load from pile shaft
Xtop - Total settlement, Xs + Xpp + Xps
Xtip - Tip settlement, Xpp + Xps
Xshaft - Shaft deformation, Xs
Xallow - Allowable settlement specified by users
Qwork - Vertical working load applied to pile
Qallow - Vertical allowable load, Qult/F.S.