Appendix M

SUSMP Report

PSOMAS

2nd Street and Pacific Coast Highway Project

STANDARD URBAN STORMWATER MITIGATION PLAN (SUSMP)

March 21, 2017

PSOMAS

STANDARD URBAN STORMWATER MITIGATION PLAN

For:
2nd Street and Pacific Coast Highway Project

Psomas Project No: 2CEN110300

Prepared for:
City of Long Beach
333 W. Ocean Blvd.
Long Beach, CA 90802
(562) 570-6383

Submitted by:
Centercal Properties, LLC
1600 East Franklin Avenue
El Segundo, CA 90425

Project Site Location/Address:
2nd Street and Pacific Coast Highway
Long Beach, CA 90803

SUSMP Prepared by:
PSOMAS
3 Hutton Centre Drive, Suite 200
Santa Ana, California 92707
(714) 751-7373
(714) 545-8883 Fax

SUSMP Preparation Date:
October 18, 2016

TABLE OF CONTENTS

1.0 Introduction **2**

Project Background
Purpose and Scope

2.0 Standard Urban Stormwater Mitigation Plan (SUSMP) **3**

3.0 Limitations **7**

4.0 References **8**

5.0 Appendices **9**

Appendix 1 SUSMP Project Site
Location and Vicinity Map

Appendix 2 LACDPW Hydrology Data
Isohyet Map / Hydrologic Soil Classification Map
Runoff Coefficient Curve
Intensity-Duration Data

Appendix 3 SUSMP Calculations
Volume & Flow Rate Calculations
BMPs Capacities

Appendix 4 Site Plan and Detail
SUSMP Site Plan
Filtration Planter Box

Appendix 5 Geotechnical Report
Infiltration

1.0 Introduction

Project Background

The project site is located in the City of Long Beach at the southwest corner of the intersection of 2nd Street and Pacific Coast Highway. The project is approximately 10.77 acres which is currently being used as a hotel with a surface parking lot. The proposed development consists of retail uses and parking structures.

The proposed project will generally maintain the same drainage areas and discharge points as that of the existing condition. The drainage collected from the building roof drains and parking structures will be treated using raised filtration planter boxes which will discharge into each respective adjacent street via parkway culverts.

During the planning of this project, Standard Urban Storm Water Mitigation Plan (SUSMP) Best Management Practices (BMPs) shall be incorporated into the proposed site plan.

Purpose and Scope

The project falls under the jurisdiction of the City of Long Beach, County of Los Angeles. The purpose of this drainage concept report is:

- To meet City of Long Beach, County of Los Angeles, Land Development requirements in allowing final design and construction to proceed in a timely manner;
- To determine the proposed development's impact on existing hydrologic conditions;
- To provide sufficient detailed information to support detailed hydraulic design of storm drainage facilities; and
- To document that the Los Angeles County Standard Urban Storm Water Mitigation Plan (SUSMP) requirements will be met.

It should be noted that detailed storm drain sizing analyses is beyond the scope of this drainage concept.

2.0 Standard Urban Stormwater Mitigation Plan (SUSMP)

Structural or Treatment Control Best Management Practices (BMPs) are required for this project under the City of Los Angeles Standard Urban Storm Water Mitigation Plan (SUSMP). Volume-based or flow-based design standards may be used separately or in combination. Volume-based criteria are used in the sizing of detention or infiltration structures while flow-based criteria are used on swales, catch basin devices or wetlands. The SUSMP requirements, approved by the Regional Water Quality Control Board, call for the treatment of the peak mitigation flow rate or volume of runoff produced by a 0.75 inch 24-hour rainfall event.

Per the revised soils report dated September 16, 2016 from Leighton Consulting Inc, the project geotechnical engineer stated that “infiltration of surface water into the ground is not recommended from a geotechnical standpoint because it will increase the potential for liquefaction occurrence (page 6).” Therefore, the treatment in this site of the peak mitigation flow rate or volume of runoff produced by a 0.75 inch 24-hour rainfall event will be by implementing filtration planter boxes.

Futhermore, per the meeting held on 10/6/16 with City of the Long Beach, Centercal Properties LLC, Psomas and Architects Orange, the site will not be required to street surface flows from paved entry areas via a Treatment Waiver since the water cannot be infiltrated and get back up to surface grade.

The SUSMP calculation methodology was used to calculate the required treatment flows and volumes for each of the discharge points from the site. The runoff coefficient curve for Soil Type 015 and the LACDPW intensity-duration data are included in *Appendix 2*. SUSMP Calculations for peak mitigation flow and volume rates and BMPs capacities are included in *Appendix 3*. The results are summarized in the *Table 1*.

Table 1. SUSMP Calculation Results

Sub Area Name	Sub Area Surface [ft^2]	Minimum required planter area [ft^2]	Provided planter area [ft^2]	Filtered Flow Capacity [cfs]	Discharge Point	SUSMP Mitigation Volume, Vm [ft^3]	SUSMP Peak Mitigation Flow Rate, Qpm [cfs]	Best Management Practice Control
P-1A	17145	686	700		Parkway Culvert	964	0.128	Flow through planter
P-1B	35500	1420	1425		Parkway Culvert	1997	0.212	Flow through planter
P-2	46200	1848	1848		Parkway Culvert	2599	0.286	Flow through planter
P-3	9740	390	392		Parkway Culvert	548	0.063	Flow through planter
P-4	28860	1154	1163		Parkway Culvert	1623	0.140	Flow through planter
P-5	35610	1424	1460		Parkway Culvert	2003	0.212	Flow through planter
P-6	39660	1586	1600		Parkway Culvert	2231	0.236	Flow through planter
P-7	28550	1142	1150		Parkway Culvert	1606	0.133	Flow through planter
P-8	35140	1406	1408		Parkway Culvert	1977	0.236	Flow through planter
TOTAL	276405	11056	11146			15548	1.65	

All of the storm water within the rooftops and parking structures will be treated via the proposed flow through planters. This BMP measure will be located to collect the runoff from the subareas mentioned in Table 1. See SUSMP Plan in Appendix 4 for subareas and BMPs locations.

Rainfall from the rooftop and parking structures of subareas P-1A, P-1B and P-2 through P-8 will be directed to large flow through planters adjacent to the building via downspouts. These planters will provide biofiltration to the discharge from the roof downspouts and convey the flow through parkway culverts to be discharged out to the adjacent street.

Conclusively, Flow-through Planters areas can effectively detain and treat the required total BMP mitigation volume of 15548 cubic feet of storm water. All Flow-through Planters will have perforated sub-surface pipes to direct treated flows to the existing storm drain systems.

The proposed development impact on the existing hydrologic condition will be minimum. The drainage quantities and outlet points between the existing and proposed conditions will not significantly change.

BMP Selection and Function

According to the County of SUSMP ordinance, this project is required to provide BMP's which will infiltrate/retain/reuse the first 0.75-inch rain event. Because the proposed building footprint covers almost the entire site, infiltration and storm water reuse were not an option for storm water treatment, in addition to the soil conditions being unsuitable for infiltration. The best option was using the flow-through planters, which are bio-filtration, retention and treatment BMP's, described below:

> The flow-through planter best management practice (BMP) functions as a soil and plant-based filtration device that removes stormwater pollutants through a combination of overland flow through vegetation, surface detention, and filtration through soil. Pore spaces and organic material in the soils help to retain water in the form of soil moisture and to promote the adsorption of pollutants (i.e. dissolved metals and petroleum hydrocarbons) into the soil matrix. Adequate contact time between the surface and pollutant must be provided for in the design of the system for this removal process to occur. For the runoff that is collected and discharged into the infiltration planter box by the roof conveying system, the sediment capture chamber will serve as a pretreatment to the filtration process. The sediment capture chamber consists of baffle walls and perforations to allow drainage of standing water into the growing medium. This growing medium is composed of a minimum of 18" sandy loam with a minimum infiltration rate of 5 inches per hour. The sandy loam is then underlain by a level of gravel and subdrains connecting to an off-site storm drain system.
>
> Plant materials shall be tolerant of summer drought, ponding fluctuations, and saturated soil conditions for 48 hours. Native plant species and/or hardy cultivars that are not

invasive and do not require chemical inputs shall be used to the maximum extent practicable.

The project will also implement the following BMPs:

- Installation of grate inlet atrium drains, catch basins, roof drains, and surface parking drains to screen trash and debris

- Common area landscape management that includes use of drought-tolerant, native landscaping, minimizing fertilizer and pesticide application, use of slow-release fertilizers, maintenance activities, and providing education and training for employees on management of landscape materials and storm water management.

- Installing and maintaining efficient irrigation systems designed to minimize water by eliminating overspray to hardscape areas, and setting irrigation timing and cycle lengths in accordance with water demands, given time of year, weather, and day and night temperatures.

- Stenciling of "No Dumping-Only Rain In Drain" or equally effective phrase on catch basins and/or area drains to alert the public as to the destination of pollutants discharged into the storm water.

- Compliance with SUSMP design requirements for outdoor trash and storage areas, loading docks, and storm drain stenciling. The trash enclosures will have screens or walls to minimize the transport of trash and litter by the wind or water; the drainage will be directed to vegetated areas where feasible; and runoff water from adjoining roofs and pavement will be directed around trash areas.

- Parking lot, walkway and driveway sweeping, and common area litter control.

3.0 Limitations

This report was prepared to comply with the guidelines established by the County of Los Angeles and their representatives. Evaluation of the appropriateness of these guidelines and the accuracy of the County data were beyond the scope of this work.

Usage of this report is limited to address the purpose and scope previously defined by the project owner. Psomas shall not be held responsible for any unauthorized application of this report and the contents therein.

The opinions represented in this report have been derived in accordance with current standards of civil engineering practice. No other warranty is expressed or implied.

4.0 References

Los Angeles County Department of Public Works, *LACDPW Hydrology/ Sedimentation Manual and Appendices* (2006)

Los Angeles Regional Water Quality Control Board, *Standard Urban Stormwater Mitigation Plan for Los Angeles County and Cities in Los Angeles County* (March 2000)

Geotechnical Exploration Report
Proposed 2nd and PCH Retail Development
City of Long Beach, California
(Revised September 16, 2016)
Project No. 11232.001
Prepared by: Leighton and Associates, Inc.
17781 Cowan
Irvine, CA 92614

5.0 Appendices

Appendix 1 SUSMP Project Site

Location and Vicinity Map

PROJECT NUMBER:

2CEN110300

PLANS PREPARED BY:

PSOMAS
3 Hutton Centre Drive
Suite 200
Santa Ana, CA 92707
(714) 751-7373 Fax(714) 545-8883

PREPARED FOR:

CENTERCAL PROPERTIES, LLC

1600 EAST FRANKLIN AVENUE
EL SEGUNDO, CA 90425

Oct 18, 2016 – 4:13PM – M:\2CEN110300\ENGR\DOCS\SUSMP\FIGURES\VICINITY MAP.DWG

Appendix 2 LACDPW Hydrology Data

Isohyet Map / Hydrologic Soil Classification Map
Runoff Coefficient Curve
LACDPW Intensity-Duration Data

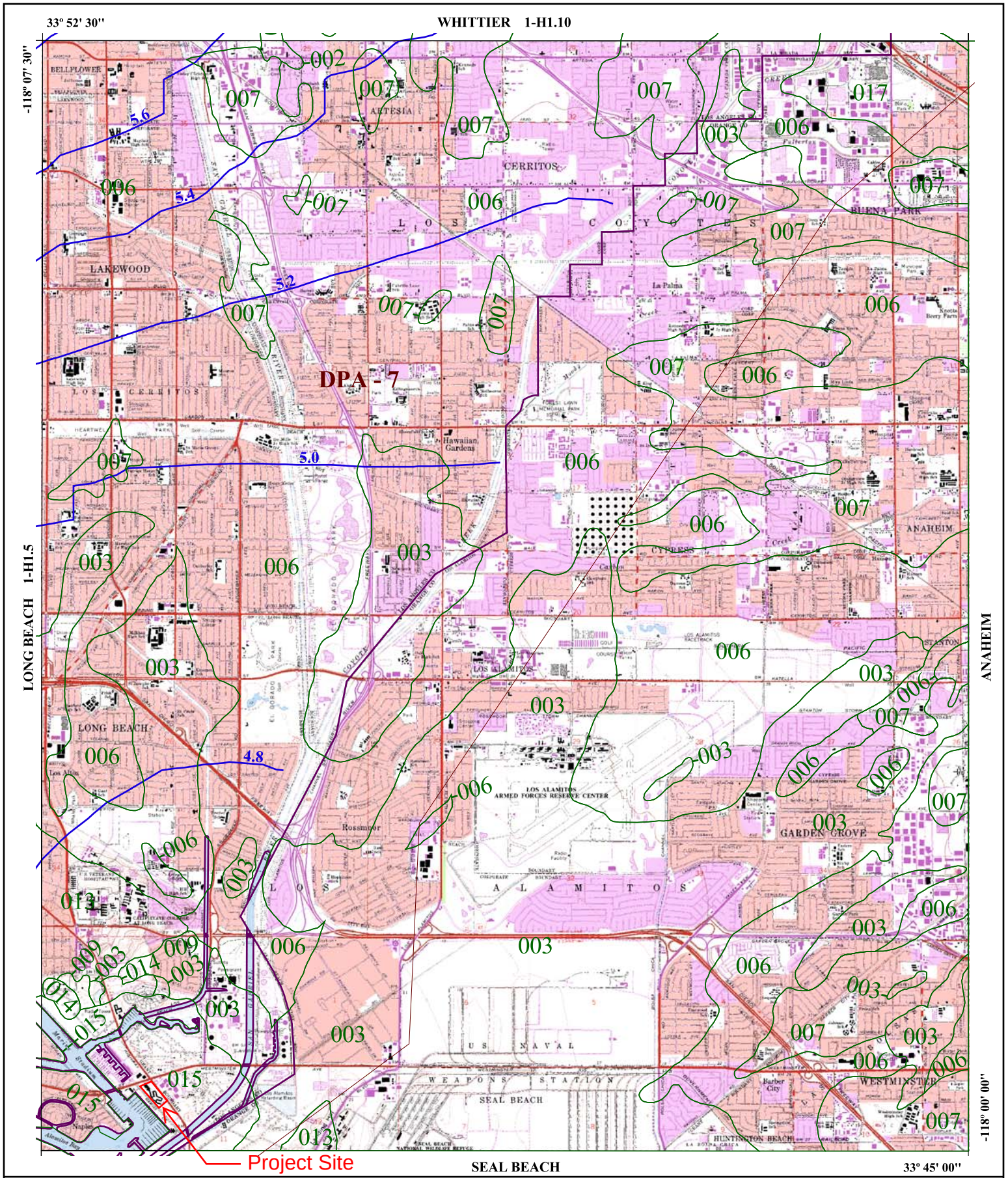

016 SOIL CLASSIFICATION AREA

7.2 INCHES OF RAINFALL

DPA - 6 DEBRIS POTENTIAL AREA

N S E W

1 0 1 2 Miles

25-YEAR 24-HOUR ISOHYET REDUCTION FACTOR: 0.878
10-YEAR 24-HOUR ISOHYET REDUCTION FACTOR: 0.714

LOS ALAMITOS
50-YEAR 24-HOUR ISOHYET

1-H1.6

LOS ANGELES COUNTY PUBLIC WORKS Public Service That Works

$C_D = (0.9 * IMP) + (1.0 - IMP) * C_U$

Where: C_D = Developed Runoff Coefficient
IMP = Proportion Impervious
C_U = Undeveloped runoff coefficient

Los Angeles County Department of Public Works

RUNOFF COEFFICIENT CURVE
SOIL TYPE NO. 061

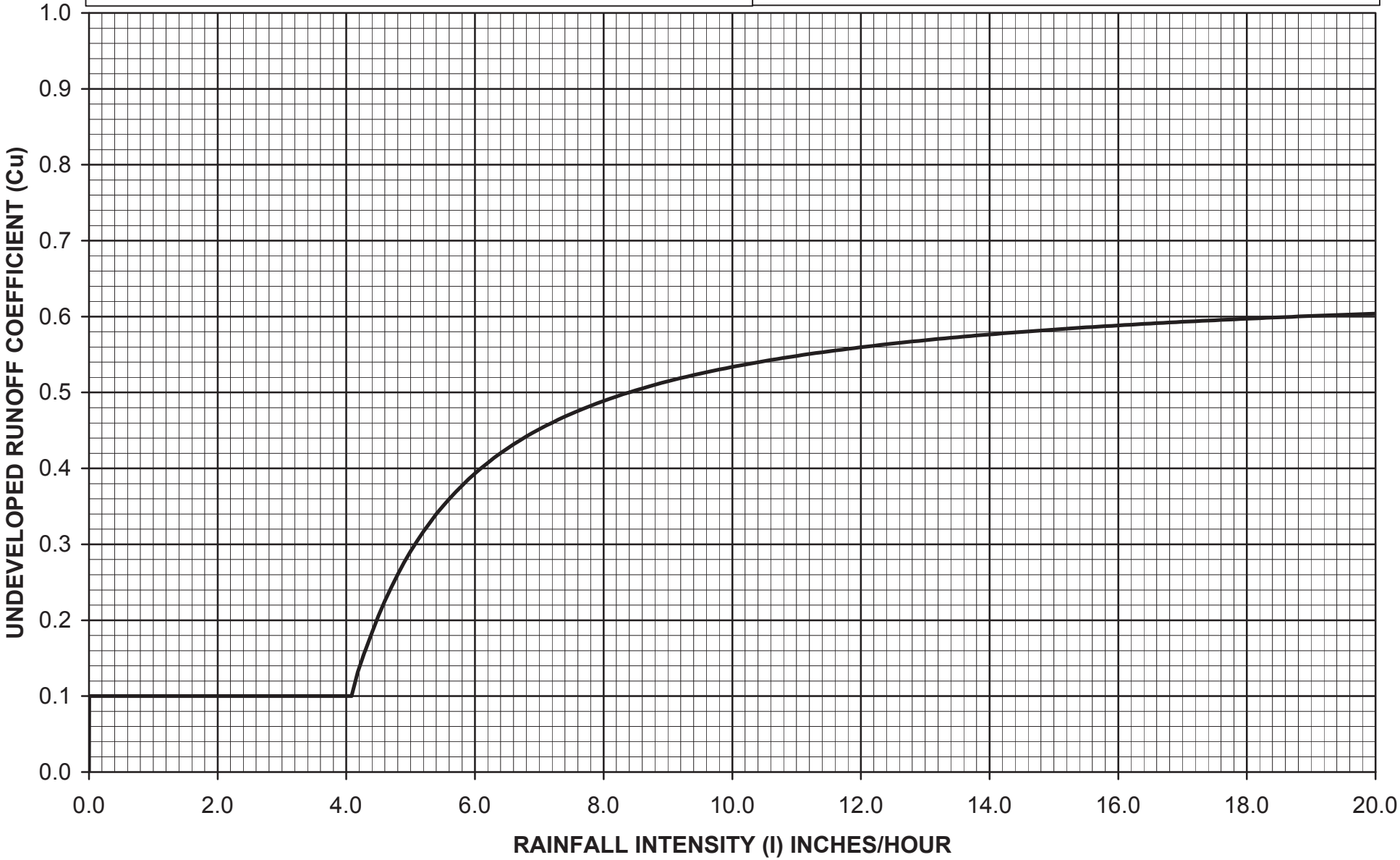

TABLE 1

INTENSITY - DURATION DATA FOR 0.75-INCHES OF RAINFALL
FOR ALL RAINFALL ZONES

Duration, T_C (min)	Rainfall Intensity, I_X (in/hr)
5	0.447
6	0.411
7	0.382
8	0.359
9	0.339
10	0.323
11	0.309
12	0.297
13	0.286
14	0.276
15	0.267
16	0.259
17	0.252
18	0.245
19	0.239
20	0.233
21	0.228
22	0.223
23	0.218
24	0.214
25	0.210
26	0.206
27	0.203
28	0.199
29	0.196
30	0.193

DETERMINING THE VOLUME (V_M)

Appendix 3 SUSMP Calculations

Volume & Flow Rate Calculations
BMPs Capacities

Volume & Flow Rate Calculations

Area P-1A

T_c (min)	I_X (in/hr)	C_u	% impervious	C_D	C_d*I_X (in/hr)	Length (ft)	Slope (ft/ft)	T_c (min)	Difference (min)
5	0.447	0.1	1	0.9	0.4023	75	0.0100	7	2
7	0.382	0.1	1	0.9	0.3438	75	0.0100	8	1
8	0.359	0.1	1	0.9	0.3231	75	0.0100	8	0

A_{total} (acre)	**0.394**	**A_{total} (ft^2)**	**17145**	**A_I (acre)**	**0.39**	**A_P (acre)**	**0.00**	**A_U (acre)**	**0.00**
Q_{PM} (cfs)	**0.128**								
V_M (ft^3)	**964**	**V_M (ac-ft)**	**0.022**						

Area P-1B

T_c (min)	I_X (in/hr)	C_u	% impervious	C_D	C_d*I_X (in/hr)	Length (ft)	Slope (ft/ft)	T_c (min)	Difference (min)
9	0.339	0.1	1	0.9	0.3051	140	0.0100	12	3
12	0.297	0.1	1	0.9	0.2673	140	0.0100	13	1
13	0.286	0.1	1	0.9	0.2574	140	0.0100	13	0

A_{total} (acre)	**0.815**	**A_{total} (ft^2)**	**35500**	**A_I (acre)**	**0.81**	**A_P (acre)**	**0.00**	**A_U (acre)**	**0.00**
Q_{PM} (cfs)	**0.212**								
V_M (ft^3)	**1997**	**V_M (ac-ft)**	**0.046**						

Area P-2

T_c (min)	I_X (in/hr)	C_u	% impervious	C_D	C_d*I_X (in/hr)	Length (ft)	Slope (ft/ft)	T_c (min)	Difference (min)
5	0.447	0.1	1	0.9	0.4023	132	0.0100	10	5
10	0.323	0.1	1	0.9	0.2907	132	0.0100	12	2
12	0.297	0.1	1	0.9	0.2673	132	0.0100	12	0

A_{total} (acre)	**1.061**	**A_{total} (ft^2)**	**46200**	**A_I (acre)**	**1.06**	**A_P (acre)**	**0.00**	**A_U (acre)**	**0.00**
Q_{PM} (cfs)	**0.286**								
V_M (ft^3)	**2599**	**V_M (ac-ft)**	**0.060**						

Area P-3

T_c (min)	I_X (in/hr)	C_u	% impervious	C_D	C_d*I_X (in/hr)	Length (ft)	Slope (ft/ft)	T_c (min)	Difference (min)
5	0.447	0.1	1	0.9	0.4023	120	0.0100	9	4
9	0.339	0.1	1	0.9	0.3051	120	0.0100	11	2
11	0.309	0.1	1	0.9	0.2781	120	0.0100	11	0

A_{total} (acre)	**0.224**	**A_{total} (ft^2)**	**9740**	**A_I (acre)**	**0.22**	**A_P (acre)**	**0.00**	**A_U (acre)**	**0.00**
Q_{PM} (cfs)	**0.063**								
V_M (ft^3)	**548**	**V_M (ac-ft)**	**0.013**						

Area P-4

T_c (min)	I_X (in/hr)	C_u	% impervious	C_D	C_d*I_X (in/hr)	Length (ft)	Slope (ft/ft)	T_c (min)	Difference (min)
9	0.339	0.1	1	0.9	0.3051	295	0.0100	17	8
17	0.252	0.1	1	0.9	0.2268	295	0.0100	20	3
20	0.233	0.1	1	0.9	0.2097	295	0.0100	20	0

A_{total} (acre)	**0.663**	**A_{total} (ft^2)**	**28860**	**A_I (acre)**	**0.66**	**A_P (acre)**	**0.00**	**A_U (acre)**	**0.00**
Q_{PM} (cfs)	**0.140**								
V_M (ft^3)	**1623**	**V_M (ac-ft)**	**0.037**						

Area P-5

T_c (min)	I_X (in/hr)	C_u	% impervious	C_D	C_d*I_X (in/hr)	Length (ft)	Slope (ft/ft)	T_c (min)	Difference (min)
9	0.339	0.1	1	0.9	0.3051	140	0.0100	12	3
12	0.297	0.1	1	0.9	0.2673	140	0.0100	13	1
13	0.286	0.1	1	0.9	0.2574	140	0.0100	13	0

A_{total} (acre)	**0.817**	**A_{total} (ft^2)**	**35610**	**A_I (acre)**	**0.82**	**A_P (acre)**	**0.00**	**A_U (acre)**	**0.00**
Q_{PM} (cfs)	**0.212**								
V_M (ft^3)	**2003**	**V_M (ac-ft)**	**0.046**						

AreaP-6

T_c (min)	I_X (in/hr)	C_u	% impervious	C_D	C_d*I_X (in/hr)	Length (ft)	Slope (ft/ft)	T_c (min)	Difference (min)
5	0.447	0.1	1	0.9	0.4023	155	0.0100	11	6
11	0.309	0.1	1	0.9	0.2781	155	0.0100	13	2
13	0.286	0.1	1	0.9	0.2574	155	0.0100	13	0

A_{total} (acre)	**0.910**	**A_{total} (ft^2)**	**39660**	**A_I (acre)**	**0.91**	**A_P (acre)**	**0.00**	**A_U (acre)**	**0.00**
Q_{PM} (cfs)	**0.236**								
V_M (ft^3)	**2231**	**V_M (ac-ft)**	**0.051**						

Area P-7

T_c (min)	I_X (in/hr)	C_u	% impervious	C_D	C_d*I_X (in/hr)	Length (ft)	Slope (ft/ft)	T_c (min)	Difference (min)
10	0.323	0.1	1	0.9	0.2907	345	0.0100	19	9
19	0.239	0.1	1	0.9	0.2151	345	0.0100	22	3
22	0.223	0.1	1	0.9	0.2007	345	0.0100	22	0

A_{total} (acre)	**0.655**	**A_{total} (ft^2)**	**28550**	**A_I (acre)**	**0.66**	**A_P (acre)**	**0.00**	**A_U (acre)**	**0.00**
Q_{PM} (cfs)	**0.133**								
V_M (ft^3)	**1606**	**V_M (ac-ft)**	**0.037**						

Area P-8

T_c (min)	I_X (in/hr)	C_u	% impervious	C_D	C_d*I_X (in/hr)	Length (ft)	Slope (ft/ft)	T_c (min)	Difference (min)
5	0.447	0.1	1	0.9	0.4023	100	0.0100	9	4
9	0.339	0.1	1	0.9	0.3051	100	0.0100	10	1
10	0.323	0.1	1	0.9	0.2907	100	0.0100	10	0

A_{total} (acre)	**0.807**	**A_{total} (ft^2)**	**35140**	**A_I (acre)**	**0.81**	**A_P (acre)**	**0.00**	**A_U (acre)**	**0.00**
Q_{PM} (cfs)	**0.236**								
V_M (ft^3)	**1977**	**V_M (ac-ft)**	**0.045**						

BMPs Capacities

Planter Box for Areas P-1A **2nd and PCH**

DA:	Drainage Area	17145	(ft^2)
A:	Planter Box Surface Area		(ft^2)
d:	Planter Box depth		(ft)
L:	Planter Box Length		(ft)
W:	Planter Box Width		(ft)

d=	3.25	ft	(3" Mulch + 24" Sandy Loam + 12" open-graded Gravel)
DA=	17145	ft^2	

A=0.04 * DA City of Los Angeles, Watershed Protection Division

A(required)= 686 ft^2

A(provided)= 700 ft^2

Planter Box for Areas P-1B **2nd and PCH**

DA:	Drainage Area	35500	(ft^2)
A:	Planter Box Surface Area		(ft^2)
d:	Planter Box depth		(ft)
L:	Planter Box Length		(ft)
W:	Planter Box Width		(ft)

d=	3.25	ft	(3" Mulch + 24" Sandy Loam + 12" open-graded Gravel)
DA=	35500	ft^2	

A=0.04 * DA City of Los Angeles, Watershed Protection Division

A(required)= 1420 ft^2

A(provided)= 1425 ft^2

Planter Box for Areas P-2 **2nd and PCH**

DA:	Drainage Area	46200	(ft^2)
A:	Planter Box Surface Area		(ft^2)
d:	Planter Box depth		(ft)
L:	Planter Box Length		(ft)
W:	Planter Box Width		(ft)

d=	3.25	ft	(3" Mulch + 24" Sandy Loam + 12" open-graded Gravel)
DA=	46200	ft^2	

A=0.04 * DA City of Los Angeles, Watershed Protection Division

A(required)= 1848 ft^2

A(provided)= 1848 ft^2

Planter Box for Areas P-3 **2nd and PCH**

DA:	Drainage Area	9740	(ft^2)
A:	Planter Box Surface Area		(ft^2)
d:	Planter Box depth		(ft)
L:	Planter Box Length		(ft)
W:	Planter Box Width		(ft)

d=	3.25	ft	(3" Mulch + 24" Sandy Loam + 12" open-graded Gravel)
DA=	9740	ft^2	

A=0.04 * DA City of Los Angeles, Watershed Protection Division

A(required)=	390	ft^2
A(provided)=	392	ft^2

Planter Box for Areas P-4 **2nd and PCH**

DA:	Drainage Area	28860	(ft^2)
A:	Planter Box Surface Area		(ft^2)
d:	Planter Box depth		(ft)
L:	Planter Box Length		(ft)
W:	Planter Box Width		(ft)

d=	3.25	ft	(3" Mulch + 24" Sandy Loam + 12" open-graded Gravel)
DA=	28860	ft^2	

A=0.04 * DA City of Los Angeles, Watershed Protection Division

A(required)= 1154 ft^2

A(provided)= 1163 ft^2

Planter Box for Areas P-5 **2nd and PCH**

DA:	Drainage Area	35610	(ft^2)
A:	Planter Box Surface Area		(ft^2)
d:	Planter Box depth		(ft)
L:	Planter Box Length		(ft)
W:	Planter Box Width		(ft)

d=	3.25	ft	(3" Mulch + 24" Sandy Loam + 12" open-graded Gravel)
DA=	35610	ft^2	

A=0.04 * DA City of Los Angeles, Watershed Protection Division

A(required)= 1424 ft^2

A(provided)= 1460 ft^2

Planter Box for Areas P-6 **2nd and PCH**

DA:	Drainage Area	39660	(ft^2)
A:	Planter Box Surface Area		(ft^2)
d:	Planter Box depth		(ft)
L:	Planter Box Length		(ft)
W:	Planter Box Width		(ft)

d=	3.25	ft	(3" Mulch + 24" Sandy Loam + 12" open-graded Gravel)
DA=	39660	ft^2	

A=0.04 * DA City of Los Angeles, Watershed Protection Division

A(required)= 1586 ft^2

A(provided)= 1600 ft^2

Planter Box for Areas P-7 **2nd and PCH**

DA:	Drainage Area	28550	(ft^2)
A:	Planter Box Surface Area		(ft^2)
d:	Planter Box depth		(ft)
L:	Planter Box Length		(ft)
W:	Planter Box Width		(ft)

d=	3.25	ft	(3" Mulch + 24" Sandy Loam + 12" open-graded Gravel)
DA=	28550	ft^2	

A=0.04 * DA City of Los Angeles, Watershed Protection Division

A(required)= 1142 ft^2

A(provided)= 1150 ft^2

Planter Box for Areas P-8 **2nd and PCH**

DA:	Drainage Area	35140	(ft^2)
A:	Planter Box Surface Area		(ft^2)
d:	Planter Box depth		(ft)
L:	Planter Box Length		(ft)
W:	Planter Box Width		(ft)

d=	3.25	ft	(3" Mulch + 24" Sandy Loam + 12" open-graded Gravel)
DA=	35140	ft^2	

A=0.04 * DA City of Los Angeles, Watershed Protection Division

A(required)= 1406 ft^2

A(provided)= 1408 ft^2

Appendix 4 Site Plan and Detail

SUSMP Site Plan

Flow-Through Planter

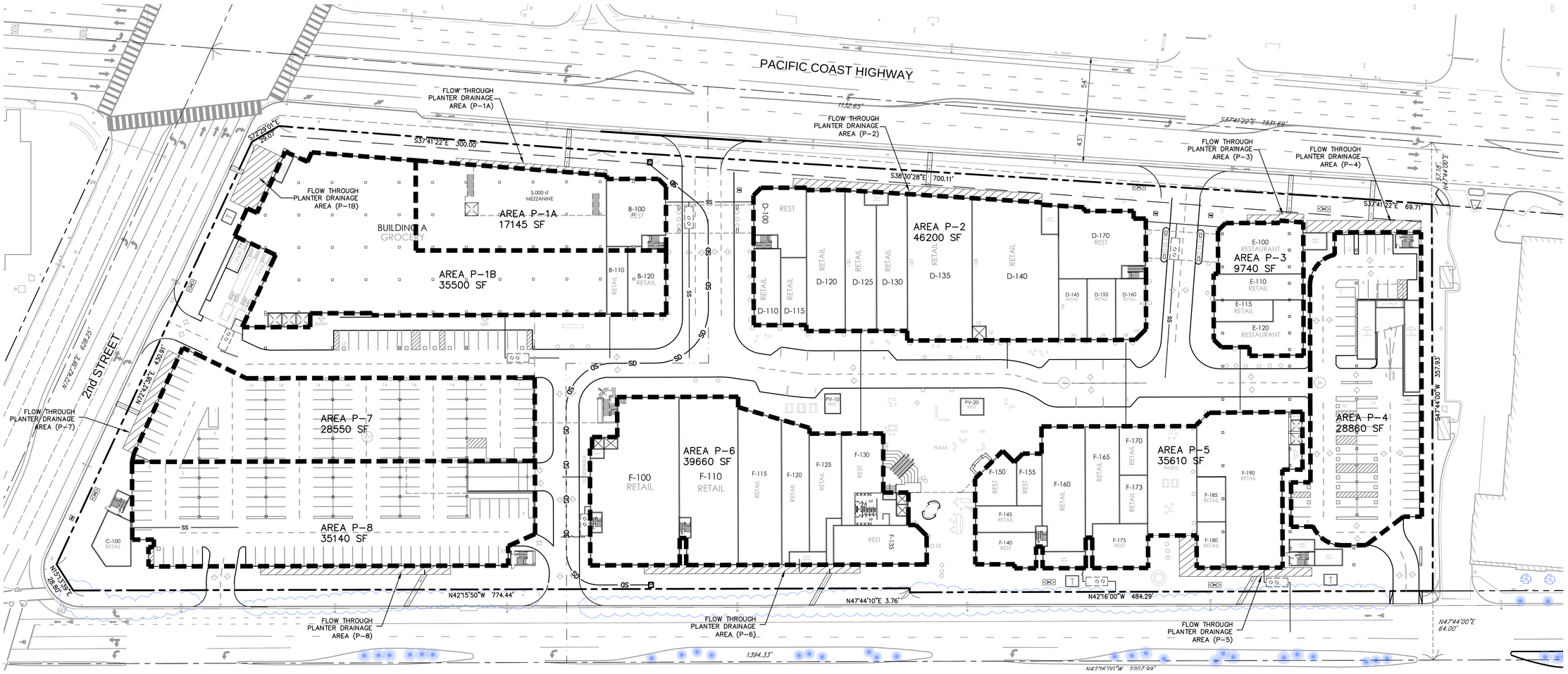

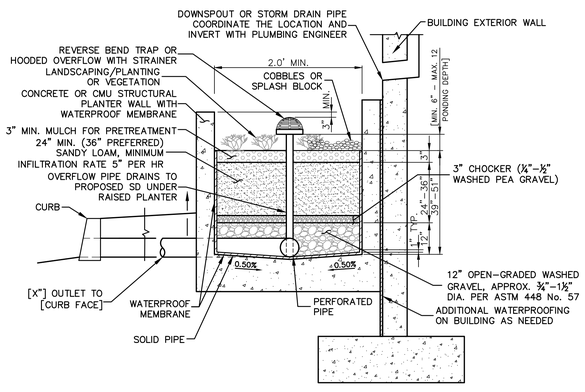

FILTRATION PLANTER BOX

NTS

LEGEND

- EXISTING STORM DRAIN PIPE
- PROPOSED STORM DRAIN PIPE
- EASEMENT
- CENTERLINE
- PROPERTY LINE
- LIMITS OF WORK
- PROPOSED RAISED PLANTER BOX
- PROPOSED CATCH BASIN (CB)
- PROPOSED PARKWAY CULVERT (PC)
- PROPOSED JUNCTION STRUCTURE (J.S.)

40' 20' 0' 40' 80'

GRAPHIC SCALE

Note: For reduced sized prints, original scale is in inches

PLANS PREPARED BY:

PSOMAS
3 Hutton Centre Drive
Suite 200
Santa Ana, CA 92707
(714) 751-7373 Fax(714) 545-8883

PREPARED FOR:

CENTERCAL PROPERTIES, LLC
1600 EAST FRANKLIN AVENUE
EL SEGUNDO, CA 90425

2ND STREET and PACIFIC COAST HIGHWAY PROJECT

SUSMP SITE PLAN

IN THE CITY OF LONG BEACH | COUNTY OF LOS ANGELES | STATE OF CALIFORNIA

DATE: 10/18/16

SCALE: 1" =40'

PROJECT NUMBER: 2CEN110300

SHEET 1 OF 1

Appendix 5 Geotechnical Report Infiltration

GEOTECHNICAL EXPLORATION REPORT
PROPOSED 2ND AND PCH RETAIL DEVELOPMENT
CITY OF LONG BEACH, CALIFORNIA

Prepared for:

CenterCal Properties LLC

1600 East Franklin Avenue
El Segundo, California 90245

Project No. 11232.001

March 14, 2016
(Revised September 16, 2016)

Leighton Consulting, Inc.

A LEIGHTON GROUP COMPANY

Leighton and Associates, Inc.
A LEIGHTON GROUP COMPANY

March 14, 2016
(Revised September 16, 2016)

Project No. 11232.001

CenterCal Properties, LLC
1600 East Franklin Avenue
El Segundo, California 90245

Attention: Mr. Steve Shaul

Subject: **Geotechnical Exploration Report**
Proposed 2nd and PCH Retail Development
City of Long Beach, California

In response to your request and authorization, Leighton Consulting, Inc. has prepared this geotechnical exploration report for the proposed 2nd and PCH retail development in the city of Long Beach, California. The purpose of our services was to evaluate the geotechnical conditions of the site, identify geologic and seismic hazards, and provide geotechnical recommendations to aid in the design and construction. This report is revised to incorporate comments and additional information from CenterCal.

The project site is underlain by artificial fill generally associated with the construction of the existing buildings and improvements and consisting mainly of silty sand and sandy silt. The fill is underlain by alluvium deposits that generally consisted of interlayered loose to medium dense sand, silty sand, sandy silt, and soft to medium stiff silty to sandy clay. Groundwater was encountered in our borings at depths of 15 and 18½ feet.

No known active or potentially active faults are mapped to cross the site and the site is not located within an Alquist-Priolo Special Studies Zones. However, significant ground shaking should be anticipated at the site during the expected design life of the proposed structures. Review of the *Seismic Hazard Zone Report for the Los Alamitos Quadrangle* (CGS, 1998) indicated that the subject site is located within an area that has been identified as being potentially susceptible to the occurrence of liquefaction, requiring a liquefaction evaluation. Therefore, we have performed a liquefaction evaluation using

17781 Cowan ▪ Irvine, CA 92614-6009
949.250.1421 ▪ 949.250.1114 Fax

Cone Penetrometer Test (CPT) soundings that were advanced to depths of 60 and 80 feet below existing grade. Based on our analyses, layers of sand and silt mainly between 10 to 40 feet below the existing grade are susceptible to liquefaction during a strong local earthquake, with a potential for surficial settlement in the range of 1½ to 4½ inches. Since the liquefiable layers are shallow and relatively thick, the potential for surface manifestation of liquefaction may also include sand boils and ground fissures. Additionally, due to the presence of marina to the south and relatively continuous liquefiable layers, there is potential for lateral spreading associated with liquefaction.

To mitigate and reduce the liquefaction potential of the subsurface soils, we recommend that ground improvement, such as stone columns or ramped aggregate piers, be performed within the proposed structure footprints. If ground improvement is performed, the proposed structures may be supported on a conventional shallow foundation system. As an alternative, the proposed structures may be supported on a deep foundation system that extends through liquefiable zones into competent material.

Presented in this report are our findings and recommendations for the proposed project based on the reviewed geotechnical aspects of the site and the anticipated behavior of the soils during and after construction.

We appreciate the opportunity to be of service to you on this project. If you have any questions or if we can be of further service, please contact us at your convenience.

Respectfully submitted,

LEIGHTON CONSULTING, INC.

Christian Delgadillo, PE 83331
Senior Staff Engineer

Djan Chandra, PE, GE 2376
Senior Principal Engineer

CD/DJC/lr

Distribution: (1) Addressee

Leighton

TABLE OF CONTENTS

Section Page

1.0 INTRODUCTION 1

1.1 Site Location and Proposed Project 1
1.2 Purpose and Scope 1

2.0 GEOTECHNICAL FINDINGS 4

2.1 Geologic Setting 4
2.2 Subsurface Soil Conditions 4
2.3 Expansive Soil Characteristics 5
2.4 Soil Compressibility 5
2.5 Soil Corrosivity 5
2.6 Groundwater Conditions 5
2.7 Infiltration Rate 6
2.8 Faulting 7
2.9 Seismicity and Ground Shaking 7
2.10 Secondary Seismic Hazards 7

2.10.1 Liquefaction Potential 7
2.10.2 Lateral Spreading 8
2.10.3 Seismically Induced Landslides 9
2.10.4 Ground Lurching 10
2.10.5 Seiches and Tsunamis 10

3.0 GEOTECHNICAL RECOMMENDATIONS 11

3.1 Ground Improvement 11
3.2 Foundation Recommendations 13

3.2.1 Shallow Foundations 13
3.2.2 Deep Foundation 14

3.3 Site Grading 16

3.3.1 Site Preparation 16
3.3.2 Excavation and Recompaction 17
3.3.3 Fill Materials 18
3.3.4 Fill Placement and Compaction 18

3.4 Slabs-on-Grade 18

3.4.1 Building Floor Slabs 18
3.4.2 Concrete Flatwork 19

3.5 Seismic Design Parameters 19
3.6 Lateral Earth Pressures 20
3.7 Pavement Design 21
3.8 Cement Type and Corrosion Protection 22
3.9 Temporary Excavation 23

Leighton

TABLE OF CONTENTS (Continued)

3.10 Trench Backfill 23
3.11 Additional Geotechnical Services 24

4.0 LIMITATIONS 25

5.0 REFERENCES 26

LIST OF ATTACHMENTS

Important Information About Your Geotechnical Engineering Report Rear of Text

Figures

Figure 1 – Site Location Map Rear of Text
Figure 2 – Boring and CPT Location Map Rear of Text
Figure 3 – Recommended Ground Improvement Depths Rear of Text
Figure 4 – Axial Capacities of Driven Concrete Pile Rear of Text

Appendices

Appendix A – Geotechnical Boring Logs
Appendix B – CPT Logs
Appendix C – Laboratory Test Results
Appendix D – Percolation Test Results
Appendix E – Liquefaction Analysis

Leighton

1.0 INTRODUCTION

1.1 Site Location and Proposed Project

The project site is an approximately 10½-acre parcel located between Pacific Coast Highway (PCH) and Marina Drive, south of 2nd Street. The site is relatively flat and currently occupied by several existing buildings including Seaport Marina Hotel and parking areas. The site location and immediate vicinity are shown on Figure 1, *Site Location Map*.

The existing improvements will be demolished to accommodate construction of the proposed development. The proposed development is expected to include a major retail store on the northeastern portion, surface parking on the northwestern portion, and a 4-level parking structure on the southern portion of the site. The rest of the site will be developed for retail stores, restaurants, a plaza, and other associated improvements. The rooftops of the major retail store and retail stores/restaurants fronting PCH will be designed as a parking deck, connected by a bridge that goes over the main entry off of PCH. The parking deck will extend to the west above the surface parking and connected by a bridge to the parking structure.

1.2 Purpose and Scope

The purpose of our services was to evaluate the general geotechnical conditions of the site relative to the proposed development and provide geotechnical recommendations to aid in the project planning, design and construction. The scope of this geotechnical evaluation included the following tasks:

- *Background Review* – In preparation of this report, we performed a background review of readily available, relevant, geotechnical and geological literature pertinent to the site. References used in preparation of this report are listed in Section 5.0.

- *Field Exploration* – Prior to performing the subsurface exploration, a site reconnaissance was carried out by Leighton personnel to mark locations of the proposed borings and CPT soundings and coordinate with Seaport Marina Hotel on site access and utility clearance. Underground Service Alert (USA) was also notified for marking of any underground utility lines.

Our field exploration, performed on February 1 and 2, 2016, included two deep hollow-stem auger borings (LB-1 and LB-2) drilled to a maximum depth of 81½ feet below existing grade and three shallow hand-auger borings (P-1 through P-3) drilled to a depth of 5 feet below existing grade for percolation testing. Soils encountered in the borings were logged in the field by a Leighton representative and described in accordance with the Unified Soil Classification System (ASTM D 2488). During drilling, bulk and relatively undisturbed drive samples were obtained from the borings for geotechnical laboratory testing and evaluation. The relatively undisturbed samples were obtained utilizing a modified California drive sampler driven 18 inches with a 140 pound automatic hammer dropping 30 inches in general accordance with ASTM Test Method D 3550. Standard Penetration Tests (SPTs) were performed at selected depth intervals in general accordance with ASTM Test Method D 1586. The number of blow counts per 6 inches of penetration was recorded on the boring logs. After completion of drilling, Borings LB-1 and LB-2 were backfilled with soil cuttings and Borings P-1 through P-3 were converted into percolation test wells. Logs of the boring are presented in Appendix A, *Geotechnical Boring Logs*. Boring logs from a previous study by Converse Consultants (Converse, 2005) are also included in Appendix A.

We also advanced sixteen CPTs to a depth of 60 and 80 feet below existing ground surface. The CPT soundings were performed in accordance with ASTM Test Method D 5778 by advancing a standard 10 cm^2 electric cone. The tests consisted of pushing the instrumented cone-tipped probe into the ground while simultaneously recording the tip resistance and side friction of the soils during penetration. The CPT logs are presented in Appendix B, *CPT Logs*. Approximate locations of the borings and CPTs are shown on Figure 2, *Boring and CPT Location Map*.

- *Field Percolation Test* – In-situ percolation testing was performed in accordance with the County of Los Angeles Department of Public Works (LADPW) *Guidelines for Design, Investigation, and Reporting Low Impact Development Stormwater Infiltration* document (LADPW, 2014). Immediately after sampling and logging, Borings P-1 through P-3 were converted into percolation test wells. A 2-inch-diameter polyvinyl chloride (PVC) section of 0.020-inch slotted pipe was installed between 0 and 5 feet to measure percolation rates over the depth intervals. Filter pack consisting of No. 3 Sand was deposited in the annulus from the bottom of the boring to the top of slotted pipe section.

After presoaking, the test well was filled to near the top of the slotted pipe to determine the standard time interval for the percolation test. Once the 30-minute standard time interval was established, the well was filled to near the top of the slotted pipe. The water drop was then measured at 30-minute intervals using a water level sounder. At the end of each 30 minute interval, the well was refilled. Testing was terminated when the percolation rates had stabilized. Field data collected and calculated percolation rate are presented in Appendix D, *Percolation Test Results*. After conclusion of percolation testing, the well materials were removed and the test hole was backfilled with the soil cuttings.

- *Laboratory Testing* – Geotechnical laboratory tests were conducted on selected relatively undisturbed and bulk soil samples obtained during our field exploration. The laboratory testing program was designed to evaluate the engineering characteristics of the onsite soil and included in situ moisture content and dry density, percent passing No. 200 sieve, sieve analysis, Atterberg Limits, direct shear, consolidation, R-value and corrosivity (sulfate and chloride content, minimum resistivity, and pH). The moisture content and dry density test results are included in the boring logs in Appendix A. Other laboratory test results are presented in Appendix C, *Laboratory Test Results*.

- *Seismic Hazards Evaluation* – We performed an engineering evaluation of seismic hazards that may impact the site. We assessed locations of active and potentially active faults near the project site and addressed the potential for primary earthquake hazards (fault rupture, seismicity and ground shaking) and secondary earthquake hazards (liquefaction potential, lateral spreading , landsliding, lurching, flooding, seiches and tsunamis) impacting the site.

- *Engineering Analysis* – The data obtained from our background review, field exploration, and laboratory testing were evaluated and analyzed to develop site-specific geotechnical recommendations for the proposed development.

- *Report Preparation* – This report presents our findings, conclusions and recommendations for the proposed project.

2.0 GEOTECHNICAL FINDINGS

2.1 Geologic Setting

The project site is located within the Long Beach Plain in the coastal portion of California's Peninsular Ranges geomorphic province that extends northwesterly from Baja California into the Los Angeles Basin and westerly into the offshore area, including Santa Catalina, Santa Barbara, San Clemente, and San Nicolas islands. The Peninsular Range is characterized by northwest/ southeast trending alignments of mountains and hills and intervening basins, reflecting the influence of northwest trending major faults and folds that control the general geologic structural fabric of the region. The site is underlain predominantly by Holocene-age alluvial fan deposits that consist generally of massive to crudely interbedded sand, silt, silty sand and clay of varying saturation and density.

2.2 Subsurface Soil Conditions

The site is underlain by artificial fill (Af) and Quaternary-aged young alluvial fan deposits (Qyf). Existing pavement sections, as encountered in our borings, consisted of 2 to 3 inches of asphalt concrete over 2 to 4 inches of aggregate base. The artificial fill across the site is generally about 2½ feet in thickness and consisted primarily of silty sand and sandy silt. Deeper fills associated with the construction of the existing buildings and associated improvements exist at the site. Boring LB-1 encountered up to 6 feet of fill, presumably associated with construction of the water and sewer pipelines located along the southern perimeter of the site. A previous study by others (California Environmental, 2005) also reported sumps and mud pits across the site; approximate locations of which are shown on Figure 2.

Below the artificial fill, Quaternary-aged young alluvial fan deposits (Qyf) were encountered in the borings to the maximum depth explored (81½ feet). The alluvium generally consisted of interlayered loose to medium dense sand, silty sand, sandy silt and soft to medium stiff sandy to silty clay. A detailed description of the subsurface soils encountered during the field exploration is presented in the boring logs (Appendix A) and CPT logs (Appendix B). Boring logs from the previous study (Converse, 2005) are also included in Appendix A. Some of the engineering properties of these soils are described in the following sections.

2.3 Expansive Soil Characteristics

The near-surface soils are mainly sand and, therefore, the expansion potential is considered to be “low”. Additionally, based on previous testing performed by Converse (2005), the near-surface soil generally exhibit “low” expansion potential.

2.4 Soil Compressibility

Two representative samples of the native soils were subjected to consolidation testing to evaluate the compression and collapse characteristics of the materials. Based on the laboratory test results, the native soils are expected to have low compressibility for the expected loading. Local clay layers with trace of organics that are highly compressible may be encountered; however, these highly compressible layers are expected to have minor impacts if ground improvement is performed or if the proposed structures are supported on deep foundations. The soils are not considered susceptible to collapse.

2.5 Soil Corrosivity

In general, soil environments that are detrimental to concrete have high concentrations of soluble sulfates and/or pH values of less than 5.5. Soils with chloride content greater than 500 ppm per California Test 532 are considered corrosive to steel, either in the form of reinforcement protected by concrete cover or plain steel substructures, such as steel pipes. Additionally, soils with a minimum resistivity of less than 1,000 Ohm-cm are considered corrosive to ferrous metal.

Based on the laboratory test results, the subsurface soils have low soluble sulfate contents. Therefore, the potential for sulfate attack on concrete is considered low. The tested soils are considered severely corrosive to buried ferrous metal in direct contact with the soils.

2.6 Groundwater Conditions

Groundwater was encountered at depths of 15 and 18½ feet below existing grade in Borings LB-1 and LB-2, respectively. Converse (2005) reported groundwater depths ranging from 10 to 15 feet below existing grade The historically high groundwater level for this area, according to the California Geologic Survey (1998, Plate 1.2), is on the order of 10 feet below the ground

surface. Data from utility potholes and environmental borings by others, provided to us after our field exploration, indicated groundwater at approximately 5 to 11 feet below grade.

Due to the proximity of the site to the coastal zone, the depth of the groundwater is expected to be influenced by tidal fluctuations. Additionally, fluctuations of the groundwater level, localized zones of perched water, and an increase in soil moisture should be anticipated during and following the rainy seasons or periods of locally intense rainfall and storm water runoff. Irrigation of landscape areas and introduction of surface water will also cause localized fluctuations of groundwater levels.

2.7 Infiltration Rate

Infiltration rates at the tested locations and depths are summarized in the table below. The percolation test locations are shown on Figure 2, *Boring and CPT Location Map*. Field data and calculated infiltration rate for each percolation test well are presented in Appendix D.

Based on the percolation test results, the measured soil infiltration rates ranged from 0.3 inches/hour to 2.2 inches/hour. It should be emphasized that the infiltration test results are only representative of the tested location and depth where they are performed. Varying subsurface conditions will exist outside of the test locations, which could alter the calculated infiltration rate indicated below.

Table 1 – Infiltration Rates

Boring No.	Drilled Depth (feet)	Screen Interval Depth (feet)	Measured Infiltration Rate (inches/hour)
P-1	5	0 to 5	2.2
P-2	5	0 to 5	0.8
P-3	5	0 to 5	0.3

As discussed later in Section 2.10.1, results of our analysis indicated that the subsurface soils at the site are susceptible to liquefaction. As such, infiltration of surface water into the ground is not recommended from a geotechnical standpoint because it will increase the potential for liquefaction occurrence.

2.8 Faulting

No active faults are mapped or known to cross the site and the site is not located within an Alquist-Priolo Earthquake Fault Zone (Bryant and Hart, 2007). Known regional active faults that could produce significant ground shaking at the site include the Newport-Inglewood, Palos Verdes, and Elsinore faults located approximately 0.3 miles, 8.1 miles, and 16.3 miles, respectively, from the site. The Puente Hills Blind Thrust fault is located approximately 10.2 miles from the site in the subsurface.

2.9 Seismicity and Ground Shaking

The principal seismic hazard to the site is ground shaking resulting from an earthquake occurring along any of several major active and potentially active faults in southern California, including those mentioned above. The intensity of ground shaking at a given location depends primarily upon the earthquake magnitude, the distance from the source, and the site response characteristics. Peak horizontal ground accelerations are generally used to evaluate the intensity of ground motion. Using the United States Geological Survey (USGS) Seismic Design Maps (USGS, 2013), the peak ground acceleration for the Maximum Considered Earthquake (MCE_G) adjusted for the Site Class effects (PGA_M) is 0.60g. Per the 2013 CBC, the peak ground acceleration for Design Earthquake ground motion is two-thirds of PGA_M or 0.40g. Based on the USGS online interactive deaggregation program (USGS, 2008), the modal seismic event is Moment Magnitude (M_W) 7.0 at a distance of 0.6 miles.

2.10 Secondary Seismic Hazards

Secondary seismic hazards in the region could include soil liquefaction and the associated surface manifestation, lateral spreading, seismically-induced landsliding, ground lurching, seiches, and tsunamis. The potential for these seismic hazards at the site is discussed below.

2.10.1 Liquefaction Potential

Liquefaction is the loss of soil strength or stiffness due to a buildup of pore-water pressure during severe ground shaking. Liquefaction is associated primarily with loose (low density), saturated, fine-to-medium grained, cohesionless soils. As the shaking action of an earthquake progresses, the soil grains are rearranged and the soil densifies within a

short period of time. Rapid densification of the soil results in a buildup of pore-water pressure. When the pore-water pressure approaches the overburden pressure, the soil reduces greatly in strength and temporarily behaves similarly to a fluid. Effects of liquefaction can include sand boils, settlement, and bearing capacity failures below structural foundations.

Review of the *Seismic Hazard Zone Report for the Los Alamitos Quadrangle* (CGS, 1998) indicates that the subject site is located within an area that has been identified by the State of California as being potentially susceptible to the occurrence of liquefaction.

We have performed liquefaction analysis of the soil profiles from the CPTs. The liquefaction evaluation was conducted using a peak horizontal ground acceleration of 0.60g, a Moment Magnitude (Mw) of 7.0, and historically high groundwater of 5 feet below grade. Our analysis, presented in Appendix E, *Liquefaction Analysis*, identifies relatively continuous layers of liquefiable soils mainly at depths between approximately 10 to 40 feet below the existing grade. The potential for surface manifestation in the form of sand boils and ground fissures is high based on the thickness and depth at which liquefaction potential occurs.

Seismically-induced settlement consists of dry dynamic settlement (above groundwater) and liquefaction-induced settlement (below groundwater). These settlements occur primarily within loose to medium dense sandy soil due to reduction in volume during, and shortly after, an earthquake event. The settlements of these strata were estimated to result in a cumulative settlement ranging from 1½ to 4 inches as summarized in Table 2, with a differential settlement of approximately one half of the total settlement.

2.10.2 Lateral Spreading

Seismically-induced lateral spreading involves primarily lateral movement of earth materials due to ground shaking. For lateral spreading to occur, the liquefiable zone must be continuous, unconstrained laterally, and free to move along gently sloping ground toward an unconfined area. Lateral spreading results in near-vertical cracks with predominantly horizontal movement of the soil mass involved. The Los Alamitos Bay marina to the

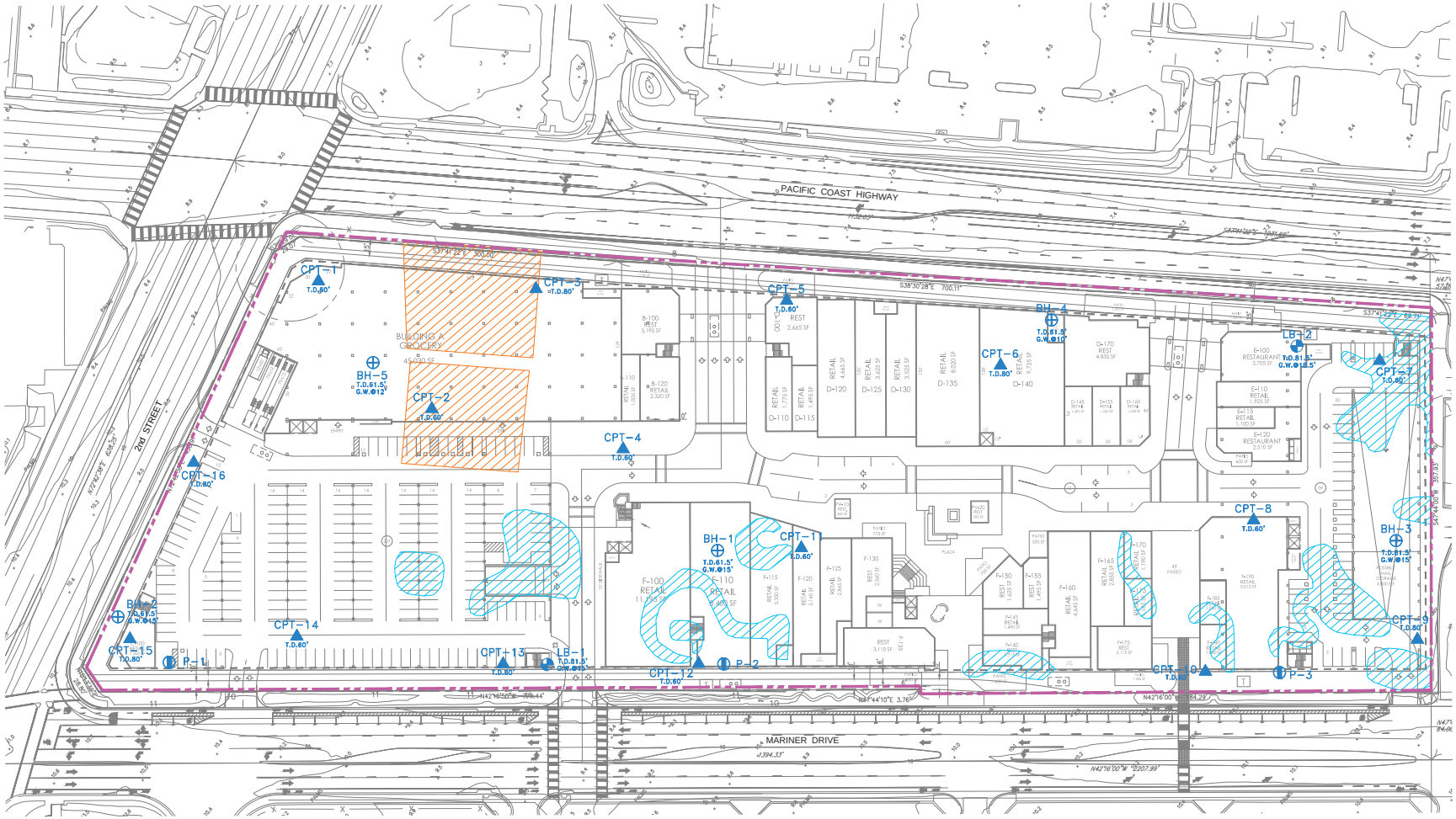

LEGEND

CPT-16 T.D.80'	APPROXIMATE LOCATION OF CONE PENETRATION TEST (CPT) SHOWN WITH TOTAL DEPTH (T.D.) IN FEET
LB-2 T.D.81.5' G.W.@18.5'	APPROXIMATE LOCATION OF HOLLOW-STEM AUGER BORING SHOWN WITH TOTAL DEPTH (T.D.) AND DEPTH TO GROUNDWATER (G.W.) IN FEET
P-3	APPROXIMATE LOCATION OF PERCOLATION TEST WELL
BH-5 T.D.61.5' G.W.@12'	APPROXIMATE LOCATION OF HOLLOW-STEM AUGER BORING BY OTHERS SHOWN WITH TOTAL DEPTH (T.D.) AND DEPTH TO GROUNDWATER (G.W.) IN FEET (CONVERSE CONSULTANTS, 2005)
	APPROXIMATE SITE BOUNDARY
	APPROXIMATE LOCATION OF SUSPECT MUDPIT AND/OR AREA OF DARK STAINING AS PER CE SUBSURFACE SITE ASSESSMENT REPORT, 2002
	APPROXIMATE LOCATION OF SUSPECT OIL SUMPS AS PER CE SUBSURFACE SITE ASSESSMENT REPORT, 2002

40' 20' 0' 40' 80'
GRAPHIC SCALE
Note: For reduced sized prints, original scale is in inches

FIGURE 2	BORING AND CPT LOCATION MAP 2nd and PCH Retail Center Long Beach, California	
Leighton	Proj: 11232.001	Eng/Geol: DJC
	Scale: 1"=40'	Date: September 2016

APPENDIX D

PERCOLATION TEST RESULTS

Leighton

Boring/Excavation Percolation Testing Field Log

Date: 2/1/2016

Project Name:	CenterCal Long Beach	**Boring/Test Number:**		**P-1**	
Earth Description:	Silty Sand	**Diameter of Boring, in.**	8	**Diameter of Casing, in.**	2
Tested by:	CD	**Depth of Boring**	5	feet	
Liquid Description:	Water	**Depth to Invert of BMP**	See report text		
Measurement Method:	Sounder	**Depth to Water Table**	See report text		
		Depth to Initial Water Depth (d_1)	48	inches	

Time Interval Standard					
Start Time for Pre-Soak	8:30 AM	2/1/2016	**Water Remaining in Boring (Y/N):**	Y	
Start Time for Standard	9:00 AM	2/2/2016	**Standard Time Interval Between Readings**	30	minutes

Reading Number	Time Start/End (hh:mm)	Elapsed Time Δtime (min)	Water Drop During Standard Time Interval (inches) Δd	Percolation Rate for Reading (in/hr)	Soil Description/Notes/Comments
1	9:00 AM 9:30 AM	30	--	--	Water filled to 1 feet bgs. Water remained in hole. Standard time interval is 30 minutes
2	9:31 AM 10:01 AM	30	12.60	25.20	Start of percolation testing using County of Los Angeles boring percolation testing method. Water refilled every 30 minutes to maintain initial water depth.
3	10:02 AM 10:32 AM	30	12.30	24.60	
4	10:33 AM 11:03 AM	30	12.20	24.40	Stabilized rates (within 10%) achieved with Δd Readings 2, 3, and 4.
5					
6					
7					
8					

Note:

Reduction Factor (R_f) = $R_f = \left(\frac{2d_1 - \Delta d}{DIA}\right) + 1$ = 11.45

Infiltration rate = $\frac{\text{Preadjusted percolation rate}}{\text{Reduction factor}}$ = **2.16 in/hr**

Boring/Excavation Percolation Testing Field Log

Date: 2/1/2016

Project Name:	CenterCal Long Beach	**Boring/Test Number:**		**P-2**	
Earth Description:	Silty Sand and Sandy Silt	**Diameter of Boring, in.**	8	**Diameter of Casing, in.**	2
Tested by:	CD	**Depth of Boring**	5	feet	
Liquid Description:	Water	**Depth to Invert of BMP**	See report text		
Measurement Method:	Sounder	**Depth to Water Table**	See report text		
		Depth to Initial Water Depth (d_1)	48	inches	

Time Interval Standard					
Start Time for Pre-Soak	9:00 AM	2/1/2016	**Water Remaining in Boring (Y/N):**	Y	
Start Time for Standard	9:10 AM	2/2/2016	**Standard Time Interval Between Readings**	30	minutes

Reading Number	Time Start/End (hh:mm)	Elapsed Time Δtime (min)	Water Drop During Standard Time Interval (inches) Δd	Percolation Rate for Reading (in/hr)	Soil Description/Notes/Comments
1	9:10 AM 9:40 AM	30	--	--	Water filled to 1 feet bgs. Water remained in hole. Standard time interval is 30 minutes
2	9:41 AM 10:11 AM	30	5.80	11.60	Start of percolation testing using County of Los Angeles boring percolation testing method. Water refilled every 30 minutes to maintain initial water depth.
3	10:12 AM 10:42 AM	30	5.60	11.20	
4	10:43 AM 11:13 AM	30	5.60	11.20	Stabilized rates (within 10%) achieved with Δd Readings 2, 3, and 4.
5					
6					
7					
8					

Note:

Reduction Factor (R_f) = $R_f = (\frac{2d_1 - \Delta d}{DIA}) + 1$ = 12.29

Infiltration rate = $\frac{\text{Preadjusted percolation rate}}{\text{Reduction factor}}$ = **0.92 in/hr**

Boring/Excavation Percolation Testing Field Log

Date: 2/1/2016

Project Name:	CenterCal Long Beach	**Boring/Test Number:**		**P-3**	
Earth Description:	Silty Sand and Sandy Silt	**Diameter of Boring, in.**	8	**Diameter of Casing, in.**	2
Tested by:	CD	**Depth of Boring**	5	feet	
Liquid Description:	Water	**Depth to Invert of BMP**	See report text		
Measurement Method:	Sounder	**Depth to Water Table**	See report text		
		Depth to Initial Water Depth (d_1)	48	inches	

Time Interval Standard

Start Time for Pre-Soak	5:30 PM	2/1/2016	**Water Remaining in Boring (Y/N):**	Y	
Start Time for Standard	9:20 AM	2/2/2016	**Standard Time Interval Between Readings**	30	minutes

Reading Number	Time Start/End (hh:mm)	Elapsed Time Δtime (min)	Water Drop During Standard Time Interval (inches) Δd	Percolation Rate for Reading (in/hr)	Soil Description/Notes/Comments
1	9:20 AM 9:50 AM	30	--	--	Water filled to 1 feet bgs. Water remained in hole. Standard time interval is 30 minutes
2	9:51 AM 10:21 AM	30	2.40	4.80	Start of percolation testing using County of Los Angeles boring percolation testing method. Water refilled every 30 minutes to maintain initial water depth.
3	10:22 AM 10:52 AM	30	1.90	3.80	
4	10:53 AM 11:23 AM	30	2.00	4.00	Stabilized rates (within 10%) achieved with Δd Readings 2, 3, and 4.
5					
6					
7					
8					

Note:

Reduction Factor (R_f) = $R_f = \left(\frac{2d_1 - \Delta d}{DIA}\right) + 1$ = 12.74

Infiltration rate = $\frac{\text{Preadjusted percolation rate}}{\text{Reduction factor}}$ = **0.33 in/hr**