SWIMMING POOL PLAN APPROVAL REQUIREMENTS FOR NEW CONSTRUCTION OR MAJOR MODIFICATIONS

CITY OF LONG BEACH - DEPARTMENT OF HEALTH & HUMAN SERVICES
BUREAU OF ENVIRONMENTAL HEALTH
2525 GRAND AVE, ROOM 220
LONG BEACH, CA 90815
(562) 570-4132/ Fax (562) 570-4038

PLAN AND SPECIFICATION REQUIREMENTS

A person proposing to construct, reconstruct or alter a swimming pool or auxiliary structure or equipment, shall submit legible plans and specifications to the City of Long Beach, Department of Health & Human Services for review and written approval prior to commencing the work and in advance of the issuance of any building, plumbing or electrical permits.

- A minimum of 2 complete sets of plans are required. This Department will retain one copy of the plans and specifications submitted for approval. Plans should include all items listed below.

- All equipment, materials, methods of construction and design must be approved by this Department.

- Any changes in construction plans or equipment must be approved by this Department. Changes may require additional plan check fees.

- Pool plan approval does not authorize the violation of any law, ordinance, or regulation and final approval is subject to field inspection and evaluation.

- Plan approvals are valid for a period of one year.

- No pool or spa shall be placed in operation without written approval of this Department.

CONSTRUCTION INSPECTIONS:

Three Department of Health & Human Services inspections are required for completion of a pool or spa. Call for inspection at least two working days prior to:

1 Guniting or backfilling a pool or spa.
2 Plastering a pool or spa.
3 Placing a pool or spa in operation (final inspection).

ITEMS TO BE INCLUDED (missing items may delay plan approval)

1 Job Address - street number, city, zip

2 Name, mailing address and telephone number of pool builder and owner.

3 Scaled drawings (see diagrams and illustration at back of requirements)

A. Scale
1. All pools other than spa pools, ¼ " = 1 ft. (top and profile view).
2. Spa pools, 1 " = 1 ft. (top and profile view).

B. General Data
1. Surface area in sq. ft.
2. Volume or total pool capacity in gallons.
3. Color of plaster or pool surface.

C. Top View
1. Dimensions (length, width)
2. Suction and return line plumbing sizes and type of material. Include location of skimmer(s), split suction drain(s), equalizers and return lines.
3. Four to six inch wide, slip resistant tiles, of contrasting color, along the bottom of the pool where the water depth is 4½ feet. (Pools with a maximum water depth of 5 feet or less do not require a marking line)
4. Stairs, ladders, grab rails, handrails.

5. Location of depth markers.
6. Contrasting tile on stairs and benches of spas. (recommended but not required)
7. Fill line location.
8. Pool light location(s) and wattage.
9. Emergency shut-off switch location for spa pools.
10. Diving board (if any) location and distance from board center to side walls or other diving boards.

D. Profile View (longitudinal section)

1. Dimensions (length)
2. Depths at the shallow end wall, depths at any beginning or ending in breaks in slope and depth at the main drain (all depths should be from the floor to the normal water level.
3. Location of safety line anchors, if required.
4. Stairs, with tread and riser dimensions.
5. Dimensions of handrails with distance above the deck and each step of the stair.
6. Sectional view of coping.
7. Water line tile.
8. Diving board (if any) with distance diving board extends over the pool and depths below the diving board.

E. Plot Plan, Deck Details and Pool Enclosure

1. Scaled plot plan showing pool location on property in relation to adjacent buildings.
2. Equipment room dimensions, placement of equipment and location in relation to the pool.
3. Deck details.
    a. Pool location on deck
    b. A minimum of 4 feet of unobstructed decking around pool (6 ft. between a pool and a spa).
    c. Clearances from pool edge to pool enclosure and clearances outside of pool enclosure.
    d. Type of deck drainage.
    e. Deck material
    f. Hose bibs within pool area with approved backflow devices.
4. Pool enclosure details
    a. Show the pool with the proposed fence or building wall surrounding it. There should be no windows, patio walls or doors of living units as part of the enclosure. Areas outside of the enclosure must be a public area. The fence enclosure cannot adjoin a private property.
    b. Show a scaled profile view of all fences, gates and doors.
    c. Outline the entire enclosure with a yellow marker.
5. Bathroom Details (when required)
    a. Separate restrooms for men and women.
    b. Smooth, moisture resistant wall finishes throughout.
    c. Floor must extend upwards onto the walls at least 5" with an integrally coved junction and shall slope to floor drain(s).
    d. Shower(s) with adequate drainage and hot and cold water (when required).
    e. Hand lavatory with single-service soap and towel dispensers and hot and cold water.
    f. Water closet(s) and urinal(s).
    g. Drinking fountain in pool area (when required).

4 Equipment List

A. Filter: make and model number and square footage.
B. Filtration pump: make model number and horsepower rating (include booster pumps of spas).
C. Additional pumps: make model number and horsepower rating (spas, attraction pumps etc.).
D. Skimmer(s): make model number.
E. Influent and effluent pressure gauges.
F. Chlorinator: make model number.
G. Flowmeter: make model number.

H. Backwash plumbing to sewer with air gap. Separation tank if required.
I. Fresh water fill line from a potable water source with approved backflow prevention device.
J. Suction grates: make and model number
K. Emergency shut off switch for all spa pumps and blowers.
L. Solar heater system detail, if being installed.

5 SAFETY EQUIPMENT AND SIGNS

A. Signs
1. No lifeguard on duty sign.
2. Illustrated artificial respiration sign.
3. Emergency phone number.
4. Occupant capacity sign (pool and spa).
5. No diving sign (if needed).
6. Spa warning sign for spa pools.

B. Emergency shut off switch sign for spa pools.
C. Body hook attached to a pole at least 12 ft. in length.
D. Life ring with rope attached. The rope must be as long as the width of the pool.
E. Pool test kit, DPD type and pH.

POOL AND SPA REQUIREMENTS

1 All swimming pools must be lined with white plaster or a smooth, waterproof, white interior finish, impervious to moisture and constructed of reinforced concrete or a material equivalent in strength and durability. Tile used for lining within a pool or spa must be submitted to this Department for approval.

2 The maximum allowed water depth at the shallow end of the pool is 3½ ft. Depths greater than this will be allowed if the pool is at least 15 ft. wide at the base of the stairs and required slopes are observed from the steps outward. In all cases, the water depth at the base of any portion of a stair must not exceed 3½ ft.

3 All swimming pools must have a minimum width of at least 15 ft. at the main drain. This width must extend for at least 3½ ft. from the main drain towards the deep end wall and 3½ ft. towards the shallow end wall. This measurement shall be made on a line perpendicular to the deep end wall and parallel to the side walls. For remaining portions of the pool, pool walls shall have a clearance perpendicular to a tangent to the wall for a distance of at least 12 ft. Pools with curved shapes must have a minimum radius of at least 6 ft. at the shallow end and a minimum radius of at least 7½ ft. at the deep end (see No. 5 for additional width requirements).

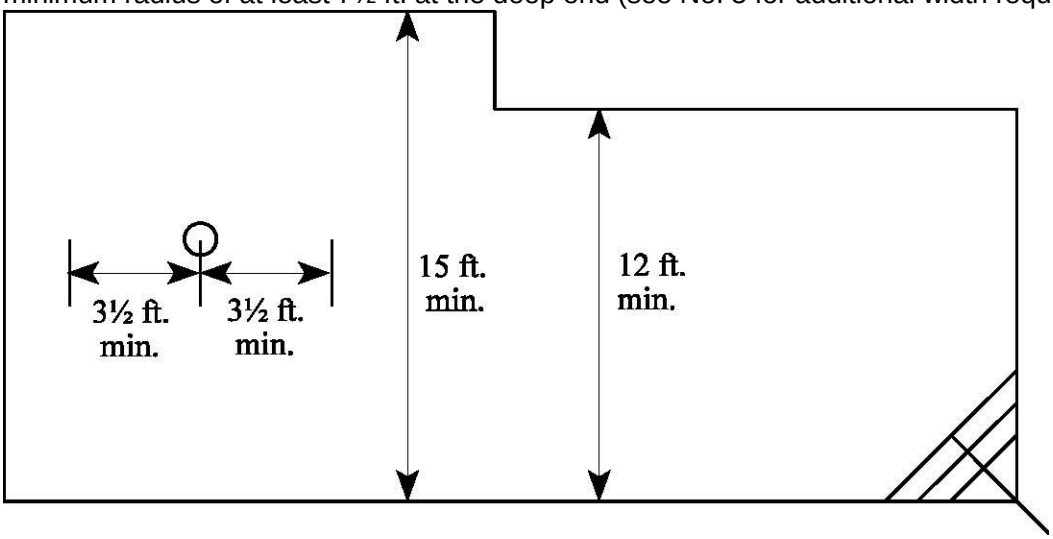

4 No swimouts, loveseats, recessed areas, benches or projections are permitted in swimming pools. An area is not considered a projection or recess and will be permitted if it is 12 ft. or more in length.

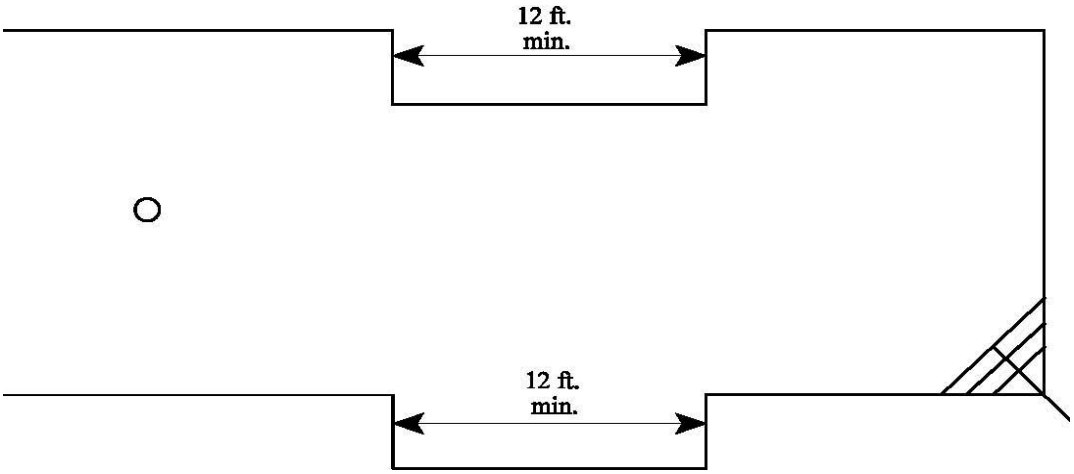

5 The following applies to "L" or irregularly shaped pools. For pools greater than 6 ft. in depth, pool walls from the deep end wall to the opposite wall in the "L", shall have a clearance perpendicular to a tangent to the wall for a distance of at least 15 ft. except this distance shall be at least 12 ft. in pools with a maximum depth of 6 feet or less.

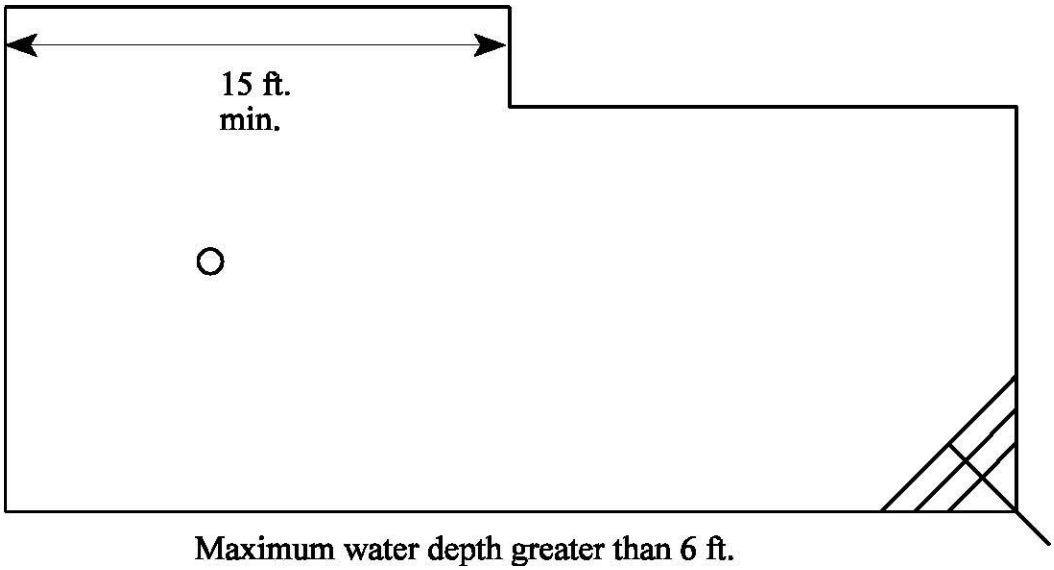

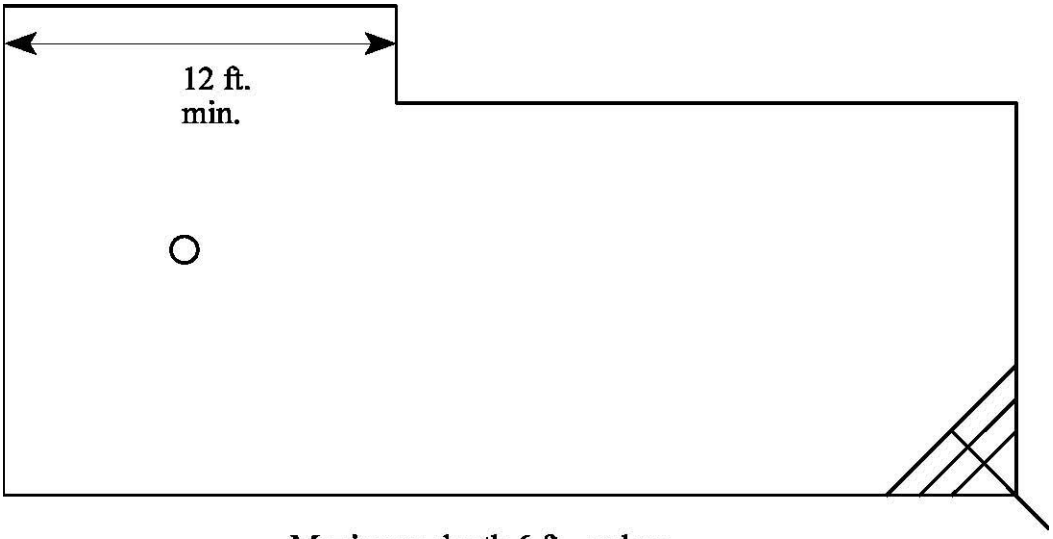

Maximum depth 6 ft. or less

6 For pools without diving boards, from the shallow end, to a depth of at least 4½ ft., the slope must be no greater than 1 ft. vertically in 10 ft. horizontally. From the break in slope to the main drain, the slope must be no greater than 1 ft. vertically in 3 ft. horizontally. All slopes must be continuous. Pools with diving boards and special purpose pools may have additional slope requirements. See the pool code.

7 In pools having a change in slope, flush mounted devices for fastening a safety rope must be installed where the water depth is 4½ ft.

8 In pools greater than 5 ft. in depth, a straight line of slip resistant tile of contrasting color, must be installed where the water depth is 4½ ft. The tile must be at least 4 inches but not greater than 6 inches wide.

9 Depth markers of contrasting color are required on both sides, at the minimum and maximum depths, points of break in slope, both ends and when the pool is greater than 20 ft. wide, on the deck. When depth markers are required on a deck because the pool exceeds 20 ft. in one area, markers will be required on the deck at all locations. Depth markers on the deck must be slip resistant and of a durable permanent type. Painted letters will not be allowed. Anytime the water depth is different on corresponding opposite sides of a pool, a depth marker will be required on the deck at those points. Depth markers must be at least 3 inches in height and must be positioned to indicate the water depth accurate to the nearest 6 inches as measured from the pool floor to the middle of the skimmer opening. The pool must be lined with waterline tiles around the entire perimeter of the pool.

10 A ladder is required at the deep end of a pool having a water depth greater than 4½ ft.

11 Steps and stepholds of ladders must have a minimum tread of 5 inches and width of 14 inches. Hand railings must be provided at the top of both sides and extend over the coping or edge of the deck.

12 Stairs are required at the shallowest end of all pools. All pools with two shallow ends or any instance where the pool user will encounter a shallow, deep and shallow configuration as he proceeds through the pool, will be required to have stairs at both shallow ends. Each step of a stair must have the same dimensions as described in No. 13 and 14 below.

13 All treads, except the top tread, must be at least 12 inches and not more than 18 inches wide and at least 24 inches across, except if the top tread is convexly or triangularly shaped, it must have a radius of at least 18 inches and not more than 24 inches. All treads must be uniform except for the top step when it is convexly or triangularly shaped. (see stair illustration at back of requirements)

14 All risers must be uniform and not exceed 12 inches in height. The top riser is considered that distance from the deck or coping, down to the first tread of the stair and the deck thickness/coping should be taken into consideration. Measurement should be made from the top tread to a flat portion of the deck or coping. The bottom riser which extends from the bottom tread to the pool floor, must be uniform. To accomplish this, the pool floor must be level from the shallow end wall out to a point where the stairs terminate towards the deep end of the pool. (see stair illustration at back of requirements)

15 A handrail is required for all stairs. The rail must be 28 - 36 inches above the deck and above each step tread as measured from a flat portion of the deck and the edge of each step tread to the top of the handrail. The rail must extend into the pool to a point not more that 12 inches from a vertical plane of the bottom riser (this is usually the bottom step tread). Double handrails are required on a spa pool, if risers are greater than 9 inches in height or if the spa bench is not at the same level as one of the step treads. There should be a minimum clearance of 3 inches between any handrail and step riser. (See handrail illustration at back of requirements)

16 All coping on pools and spas must extend out into the pool at least one inch and not more than two inches. The coping must be no greater than 2½ inches thick. Standard bull-nosed coping may be installed horizontally since its edge flares up and prevents water from entering the pool. All other types of coping or cantilevered decking must be sloped at 1/4 inch per foot away from the pool. (See coping illustration at back of requirements)

17 A minimum 4 ft. wide, continuous, slip resistant, non-abrasive deck area of concrete or concrete like material must be provided flush with the top of the pool and extend completely around the pool. Deck material other than concrete must be approved by this Department. Wood decking or indoor-outdoor carpeting is not permitted. Deck measurements are made to the edge of the coping. The required decking around a pool or spa, must be free of all posts, columns or other obstructions. The deck must be level with the coping with no changes in elevation. All parts of the deck must drain naturally or to floor drains at a slope of 1/4 inch per foot and not accumulate pockets of water. The space between the coping and the deck must be sealed with an appropriate caulking. A distance of at least 6 ft. must separate a spa pool from an adjacent swimming pool.

18 Separate men's and women's public toilet facilities are required at the pool area if living units of the farthest pool user is greater than 300 ft. walking distance from the pool. Vertical distances should also be included when calculating the distance. When bathroom facilities are required at a pool, they must be adjacent to the pool area and located not more than 100 ft. walking distance away and be easily accessible by pool users. If two swimming pools are located on a property and all units are within 300 ft. walking distance of <u>either</u> swimming pool, <u>no</u> bathroom facilities are required. However, at facilities with separate swimming pools and spas, all living units must be within 300 ft. of the swimming pool and the spa in order to be exempt from having bathroom facilities. If a complex chooses to provide bathroom facilities at a pool or spa which is exempt from requiring bathrooms, the bathroom facilities need not comply with the swimming pool code in regards to separate men's and women's facilities, urinals and floor drains, but must be constructed so as to be readily cleanable.

For the purpose of calculating the number of showers, toilets and lavatories, one bather shall be considered for every 15 sq. ft. of pool surface area.

- One shower with hot and cold water must be provided for every 50 bathers.
- One lavatory with hot and cold water must be provided for every 80 bathers
- Separate toilet facilities must be provided for each sex. One toilet must be provided for every 60 women and one toilet and one urinal for every 75 men bathers.

19 Shower and dressing facilities must be provided for users of a pool <u>unless</u> such facilities are available in adjacent living quarters.

20 Each pool must be provided with a separate recirculation and treatment system.

21 All pools are required to have split main drains on the floor, located a minimum of 3 ft. apart, rim to rim.

22 Suction grat es of all swimming pools and spas must provide sufficient area so that the maximum velocity of water passing through them does not exceed 2 ft./sec. The velocity may be 6 ft./sec when anti-vortex covers are used.

23 A minimum turnover rate of six hours or less is required for a swimming pool. A minimum turnover rate of one hour or less is required for a wading pool. A minimum turnover rate of one-half hour or less is required for a spa pool.

24 A skimmer is required for each 500 sq.ft. of pool surface area. Skimmers must meet the following requirements: -Skimmers must be approved by this Department. -Skimmers shall be built into the wall. -Skimmers shall be individually adjustable. -Skimmers shall have an air-lock protective device which will prevent leakage of air into recirculation system. -Each skimmer shall have a cleanable screen or basket, removable from an opening on the deck. -All skimmers not connected to a main drain require an equalizer line with an equalizer valve, covered with an approved grate. Pools and spas with <u>one</u> skimmer <u>not</u> connected to a main drain require a split equalizer line with an equalizer valve, covered with an approved grate.

25 Two return lines are required for the first 10,000 gallons and one return line for each additional 10,000 gallons. Return line inlets must be located at least 18" below the water line, except for spas. For pools exceeding 40 ft. in width, bottom return lines must be provided.

26 Filters must be sized according to the following: Diatomaceous Earth 1 - 2 GPM/sq.ft. (see ratings in equipment list) Rapid Sand 3 GPM/sq.ft. High Rate Sand 15 GPM/sq.ft. Cartridge .375 GPM/sq.ft.

27 Influent and effluent pressure gauges are required. The effluent pressure gauge must be placed on a straight length of pipe at the same elevation as the influent pressure gauge.

28 A flowmeter must be installed on a horizontal straight run of pipe with a minimum of 10 pipe diameters before and 4 pipe diameters after the flowmeter. It should be positioned after the filter and before the heater. It may be installed after the heater, if a great enough distance can be maintained so that heated water will not damage the flowmeter.

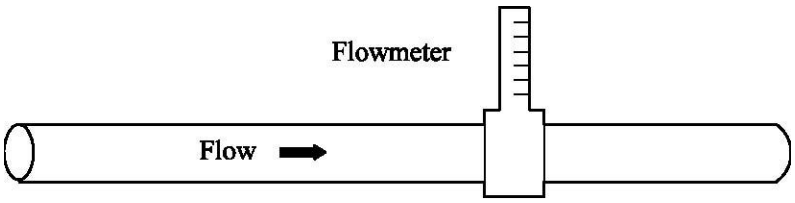

Straight Pipe - No Bends or Restrictions

29 An automatic chlorinator is required which is capable of supplying not less than the equivalent of 2 pounds of gas chlorine per day per 10,000 gallons pool water capacity. Gas chlorinators are required to supply 3 pounds of gas chlorine per day per 10,000 gallons of pool water capacity.

30 Diatomaceous earth filters must be permanently plumbed to a p-trap with a fixed air gap and have a separation tank when required by the sewering agency. Sand filters must be permanently plumbed to a p-trap with a fixed air gap. Cartridge filters must have an area set aside with a hose bib and floor drain to clean the filter. No direct connection of a pool or its recirculating system shall be permitted with a sanitary sewer, storm drain or deck drain system. A sight glass is required when needed for observation of backwash water.

31 All plumbing must be sized so that the rate of flow does not exceed 10 feet per second in PVC return lines and 8 feet per second in PVC suction lines or any copper line.

32 Each pool must be provided with a bottom drain by which the pool can be emptied. Each drain outlet must be covered with an approved grate which is removable only with tools.

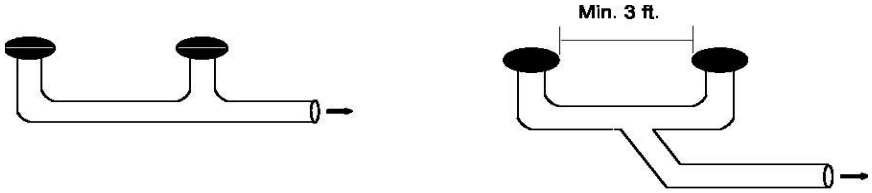

Not Acceptatble
10 Pipe Diameters Min.

Acceptable
4 Pipe Diameters Min.

33 A permanently installed fill line supplied by a potable water source and protected by an approved backflow device is required. The following backflow devices are required on fill lines of all pools and spas:

-In-wall fill lines with no downstream valving - an atmospheric vacuum breaker.
-Automatic fill lines with downstream valving - a pressure vacuum breaker.
-Fill lines connected to a filtration suction or return line or any pressurized line - a reduced pressure principle backflow prevention device.

34 An adequate number of hose bibs are required in the pool area in sufficient numbers to allow a 75 ft hose to reach all areas of the deck. Each hose bib must be protected by an approved backflow device.

35 An underwater white incandescent light is required in a swimming pool or spa . The light must be at least 0.5 watts per square foot of pool or spa surface area. If other types of lighting are used, such as fiber optic or fluorescent, their equivalency to incandescent lighting must be demonstrated.

36 Fencing Requirements (see fencing diagram at back of requirements) :

(a) Enclosure. The pool shall be enclosed by one or a combination of the following: a fence, portion of a building, wall or other approved durable enclosure. Doors, openable windows, or gates of living quarters or associated private premises shall not be permitted as part of the pool enclosure. The enclosure, doors and gates shall meet all of the following specifications:

(1) The enclosure shall have a minimum effective perpendicular height of 5 feet as measured from the outside as depicted in Figures 31B-4 and 31B-5 in the Pool Code.

(2) Openings, holes or gaps in the enclosure, doors and/or gates shall not allow the passage of a 4 inch diameter sphere. The bottom of the enclosure shall be within 2 inches of the finished grade.

(3) The enclosure shall be designed and constructed so that it cannot be readily climbed by small children. Horizontal and diagonal member designs, which might serve as a ladder for small children, are prohibited. Horizontal members shall be spaced at least 48 inches apart. Planters or other structures shall not be permitted to encroach upon the clear span area as depicted in Figure 9024(b). Chain link may be used provided that the openings are not greater than 1 ¾ inches measured horizontally.

(b) Gates and doors opening into the pool enclosure shall also meet the following specifications:

(1) Gates and doors shall be equipped with self-closing and self-latching devices. The self-latching device shall be designed to keep the gate or door securely closed. Gates and doors shall open outward away from the pool except where otherwise prohibited by law. Hand activated door or gate opening hardware shall be located at least 3½ feet above the deck or walkway. EXCEPTION: Doors leading from areas of hotels and motels, as defined in the Business and Professions Code Section 25503.16(b), which are open to the general public, e.g., restaurants, lobbies, bars, meeting rooms, and retail shops need not be self-latching.

(2) Except as otherwise provided herein, gates and doors shall be capable of being locked during times when the pool is closed. Exit doors which comply with Chapter 33 shall be considered as meeting these requirements.

(3) The pool enclosure shall have at least one means of egress without a key for emergency purposes. Unless all gates or doors are so equipped, those gates and/or doors which will allow egress without a

key shall be clearly and conspicuously labeled in letters at least 4 inches high "EMERGENCY EXIT".
(4) The enclosure shall be designed and constructed so that all persons will be required to pass through common pool enclosure gates or doors in order to gain access to the pool area. All gates and doors exiting the pool area shall open into a public area or walkway accessible by all patrons of the pool.
(c) Retroactivity. Subsections (a) and (b) shall apply only to a public swimming pool constructed on or after July 1, 1994.

37 Any solar heating system connected to a pool or spa shall be a separate system from the recirculation system with its own pump, split suction and return lines.

38 Supplemental heat transfer systems for pools or spas must not interfere with the proper functioning of the recirculation system or reduce the filtration rate below the required minimum. These types of systems will be reviewed on a case by case basis to determine if a double wall vented heat exchanger will be required.

39 A body hook with a pole at least 12 ft. in length is required (spas exempt).

40 A life ring with rope attached is required. The rope must be as long as the width of the pool (spas exempt).

41 A sign, in letters 4 inches high, stating "WARNING - NO LIFEGUARD ON DUTY" -"Children under the age of 14 should not use pool without an adult in attendance", is required.

42 An illustrated artificial respiration sign is required.

43 In pools with a maximum depth of 6 ft. or less, a sign, with letters at least 4 inches high, stating "NO DIVING", is required.

44 A sign, with letters at least 4 inches high, must be posted indicating the maximum number of occupants allowed for each pool or spa. The occupant capacity shall be based on one bather for every 20 sq.ft. for swimming pools and one bather for every 10 sq.ft. for spas.

45 Provide adequate floor space for pool equipment in a location which will facilitate easy access to the equipment.

46 All metal pools require a cathodic protection system to limit electrolysis. In-ground installation of aluminum pool shells are prohibited.

47 Floating type pool covers are limited to pools where there is constant supervision with a responsible person opening the pool and removing the cover and closing the pool each day. Permanent or safety type pool covers must be submitted to this Department for approval and must not obstruct the deck in any way nor interfere with the coping requirements and be ANSI approved.

48 If contrasting tile is used along the edge of pool steps, it must be no greater than 4 inches wide and slip-resistant.

ADDITIONAL REQUIREMENTS FOR SPA POOLS

1 The water surface area of a spa must not exceed 250 sq.ft. and the water depth must not exceed 4 ft. The water depth over the benches must not exceed 24 inches.

2 All spas must have benches extending around the entire perimeter of the spa and have an aeration system sufficient to distribute aeration over the entire surface of the spa. Spas constructed or intended

for use as swim spas are prohibited. In spas where there is the possibility of someone swimming, the following sign may be required to be posted: "NO SWIMMING" (in letters 4 inches high) - "it has been determined that swimming in elevated water temperatures may be hazardous to your health". There must be no abrupt changes in the height of spa benches. Any changes in elevation must not exceed a slope of 1:10. Special use spas under medical supervision may be exempt from some or all of the above requirements.

3 Spa benches must be a minimum of 12 inches but not more than 24 inches in width. The clearance between parallel benches in a spa must be at least 30 inches. The floors of spas are required to have a minimum length and width, or diameter of 30 inches.

4 A continuous unobstructed 4 ft. wide, slip-resistant, non abrasive deck area of concrete or concrete like material must be provided flush with the top of the spa pool and extend around at least 50% of its perimeter. Spa steps must be located where the deck is at least 4 ft. wide. If the deck is raised, it must have a protective railing extending around the entire perimeter including areas not requiring a 4 ft. deck.

5 Landscape planters, flower beds or similar unpaved areas shall not be located within 4 ft. of a spa pool unless such areas are behind a solid wall at least five feet in height as measured from the outside.

6 A spa pool aeration and/or hydro-jet system must be completely separate from its filtration system and must not be interconnected with any non-spa pool.

7 A return line will be required in a spa for each 50 gpm of designed filtration rate or fraction thereof (design rate means output of pump at 60 ft. of head.) Example: if a spa has a required turnover rate of 78 gpm, it is required to have 2 return lines.

8 The following is required on all suction outlets of all spa pools:

- All booster pump suctions and the main drain suction must be split so that the suction outlets are at least 3 ft. apart or located on different design planes. The pipe size of the branches must be the same size as the supply line connected to the branches. The main drain must be split even if connected to a skimmer. Where space is limited, main drains may be located on spa walls. In gunited spas, at least one drain should be located on the floor.

- When located on walls, all suction outlet covers must be located so that the bottom edge of the cover is within 3 inches of the spa floor.

- Each branch of a booster or filtration split suction must terminate under its own suction outlet cover. Two different split suctions may be placed under the same grate if the grate is an approved 12 x 12 grate or larger.

- Split suctions must be plumbed so there is at least one 90 degree angle between the suction outlet opening and the main suction line going to the pump. This 90 degree angle must be located prior to where the main suction line begins.

9 A spa pool must have a minimum of two depth markers.

10 The maximum allowable water temperature of a spa shall be 104 degrees F.

11 A warning sign regarding the use of spa pools must be posted adjacent to a spa pool. (see pool code for sign language)

12 Fiberglass or acrylic spas must be on this Departments approved equipment list. Only white or light pastel colors are permitted. A light color is defined as a color having a light reflectance value (LRV) of 55% or greater. Tile samples for tile spas must be submitted for slip-resistance and color approval.

13. Fiberglass spas with coping as part of the pool shell extending out onto the deck shall have the following dimensions: -The height shall be at least 1/2 inch but not more than 2 inches above the deck. -The width shall be at least 2 inches and not exceed 6 inches. -The width shall not be sloped and shall be slip resistant.
(see coping illustration at back of requirements)

14. Contrasting tile along the edge of benches and steps is <u>not</u> required but is recommended. If it is installed, it must be no greater than 4 inches in width and slip-resistant.

15. A <u>single</u> clearly labeled emergency (on/off type) shut off switch which is readily accessible and visible from the spa, and will shut off <u>all</u> filtration, booster and blower pumps, is required.

16. For fiberglass spas, waterline tile around the entire perimeter of the pool is required.

17. Cold plunges are permitted under the following conditions: -The maximum size is 49 sq.ft. and the maximum depth is 4 ft. -The cold plunge must be built in conjunction with a hot spa. -The cold plunge must have a refrigeration system or other means to cool the water. -Recirculation system requirements must comply with hot spa standards. -A ladder and grab rail may be used in lieu of stairs. -Benches may be omitted.

DIAGRAMS AND SPECIFICATIONS

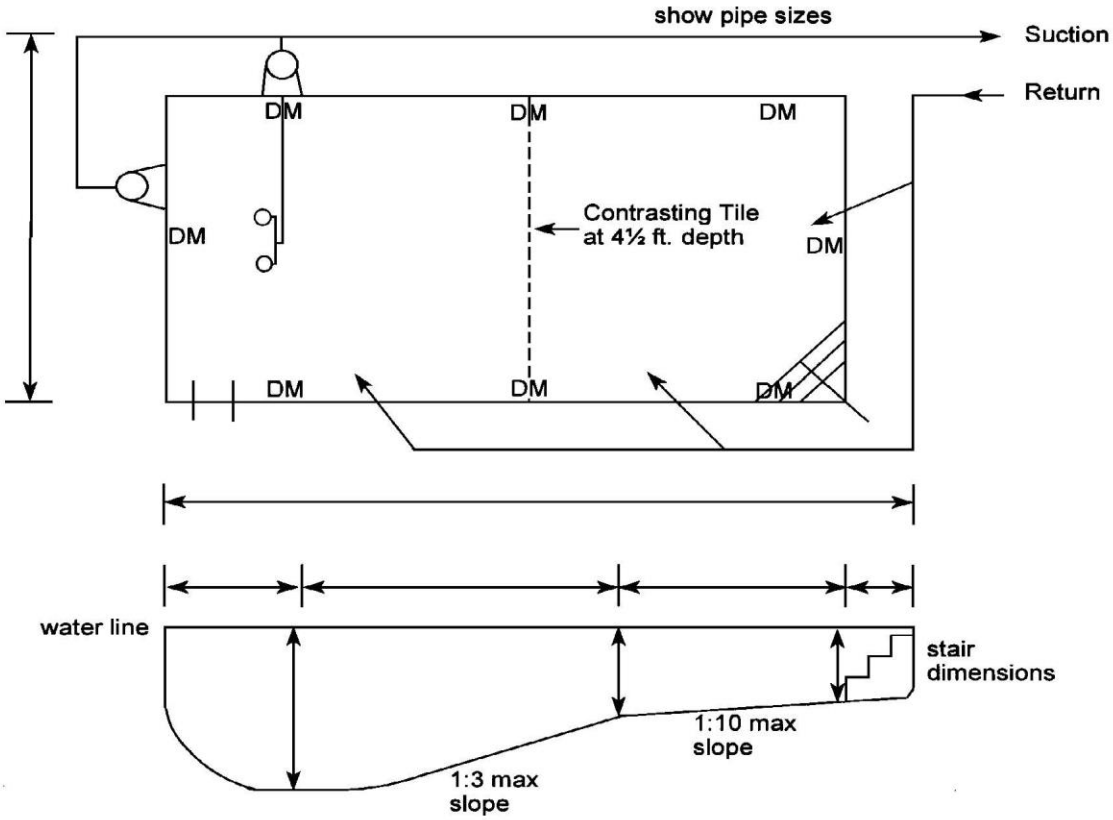

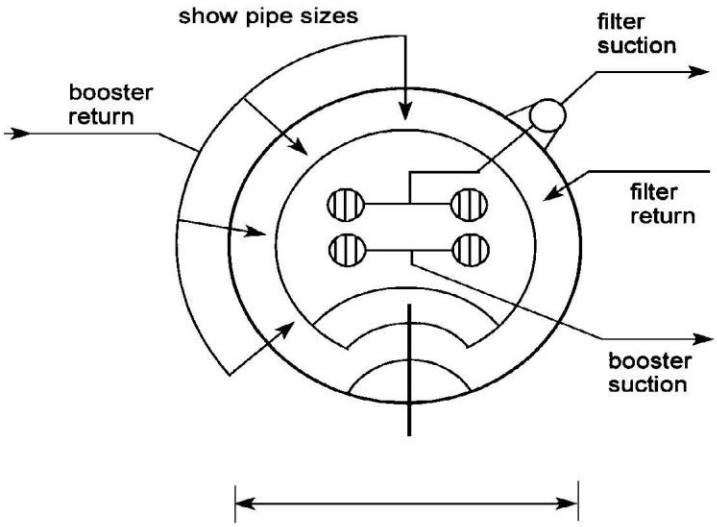

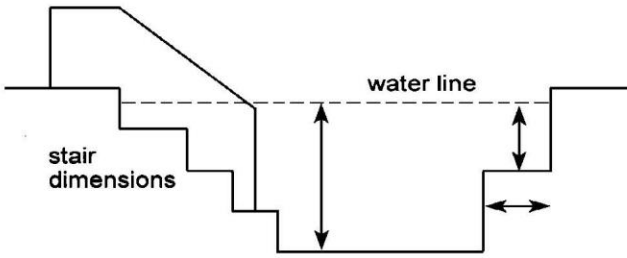

APPROVED COPING

Monolithic Concrete Coping

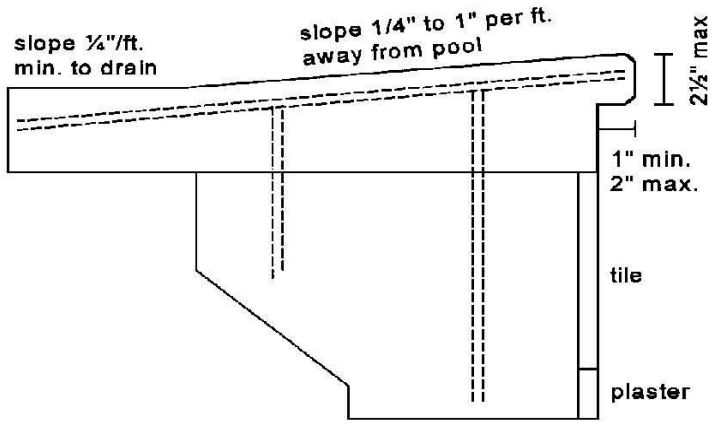

Cast-in-Place Concrete Coping

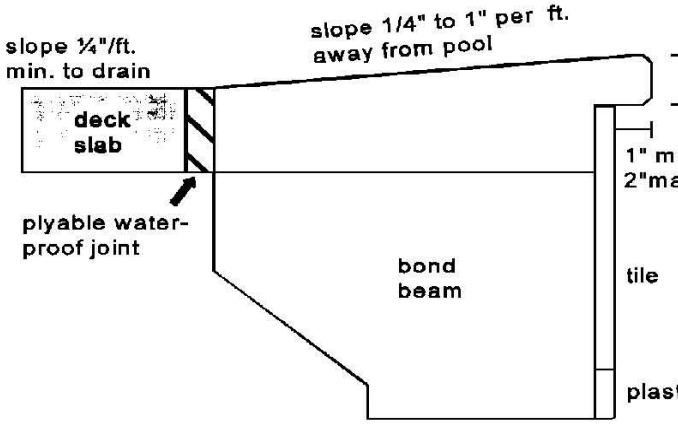

Precast Bullnose Coping

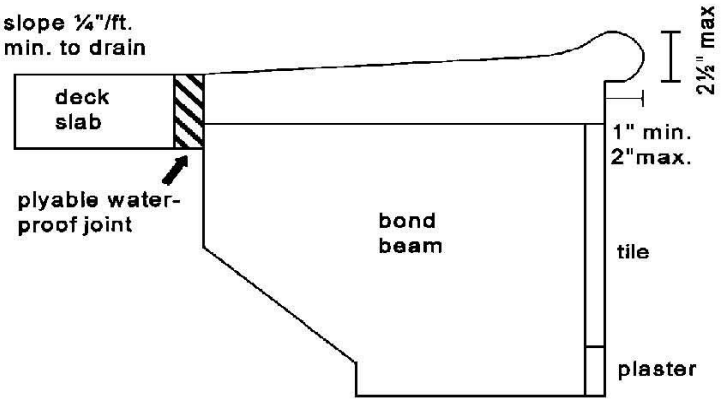

Brick Bullnose Coping

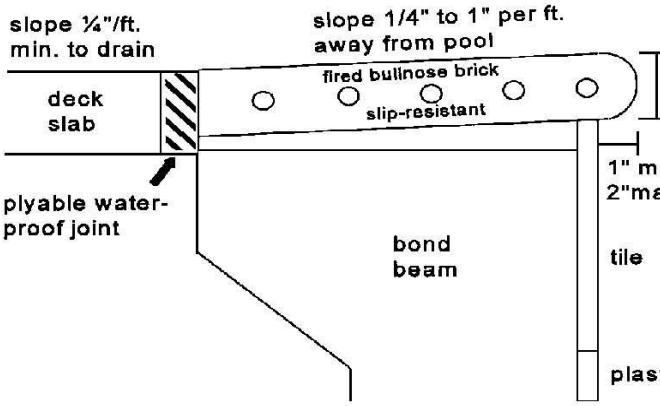

Fiberglass Spa Coping

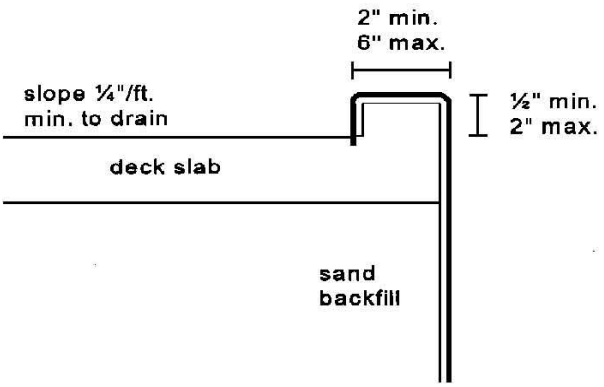

Perimeter Overflow Pools

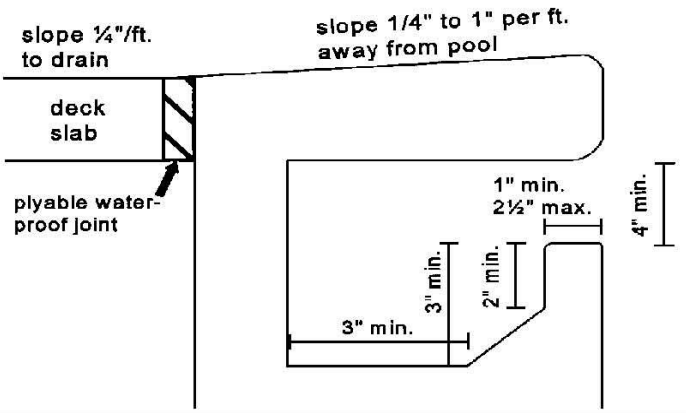

APPROVED POOL ENCLOSURE FENCING

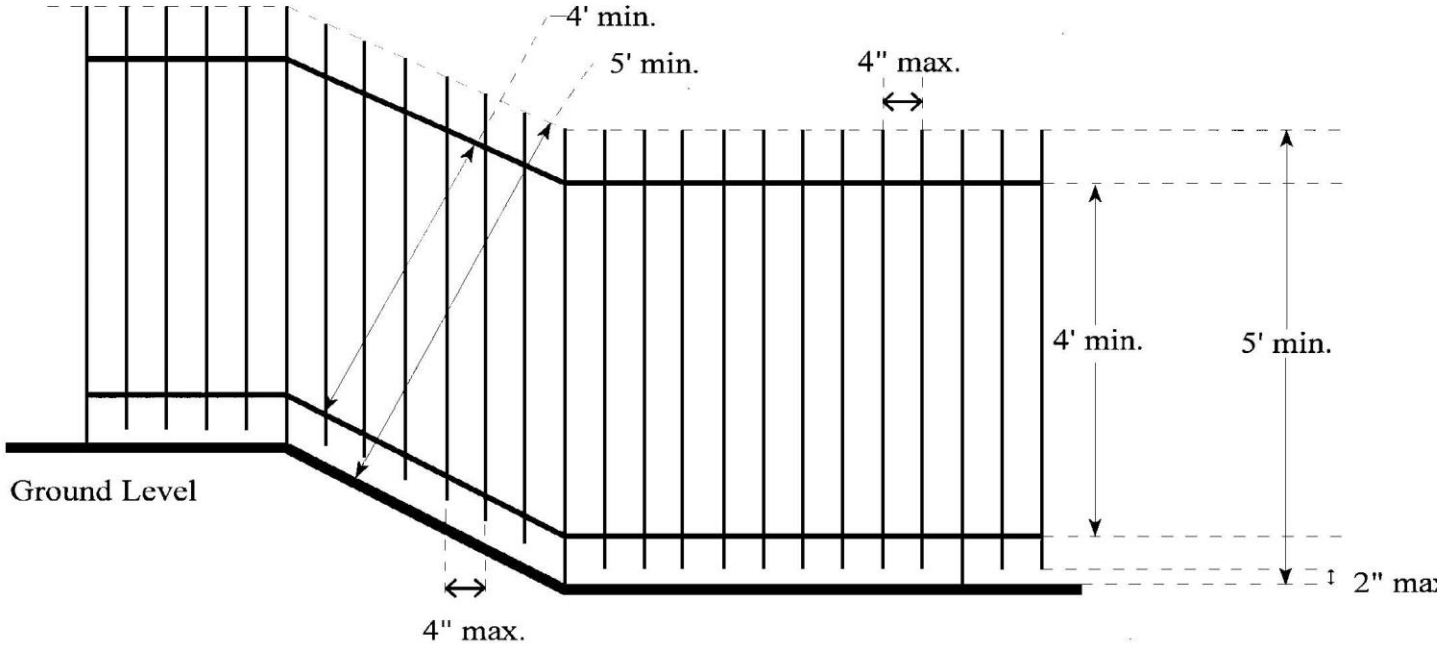

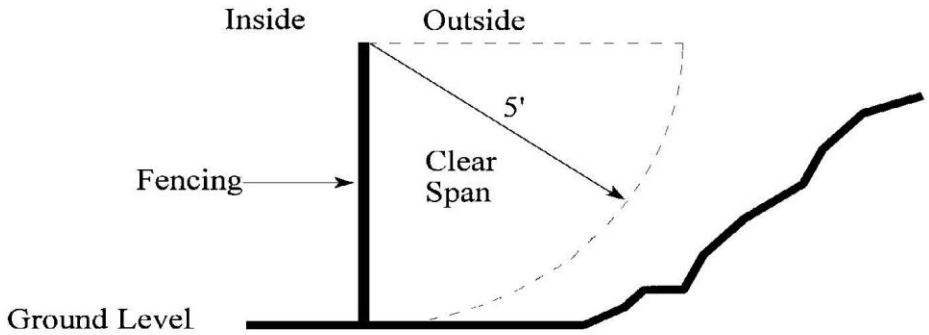

STAIR DIMENSIONS

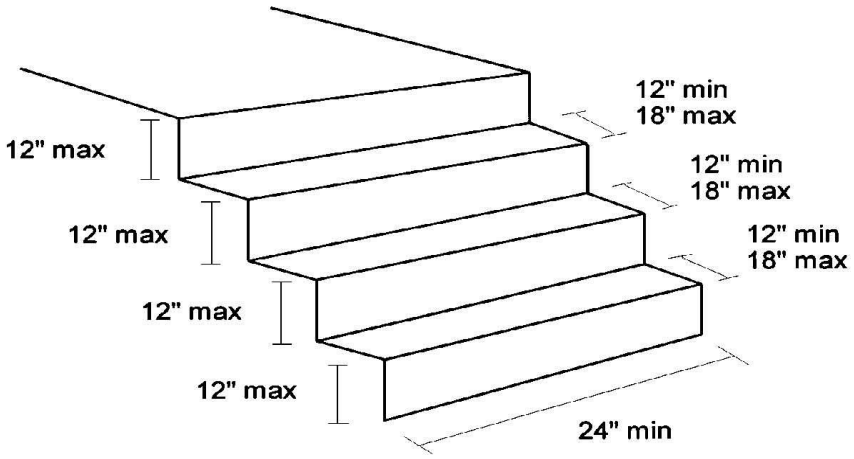

Triangular
Top Step

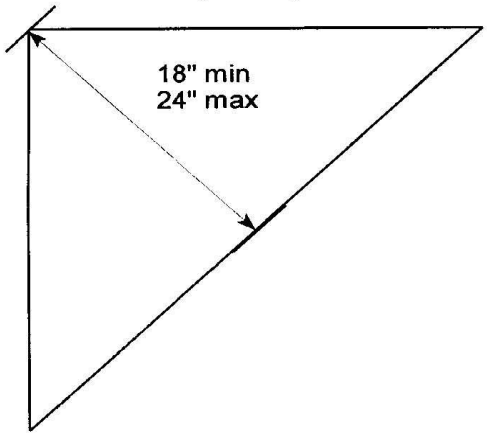

Convex
Top Step

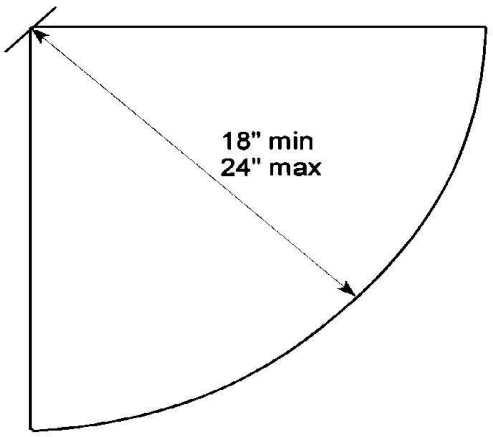
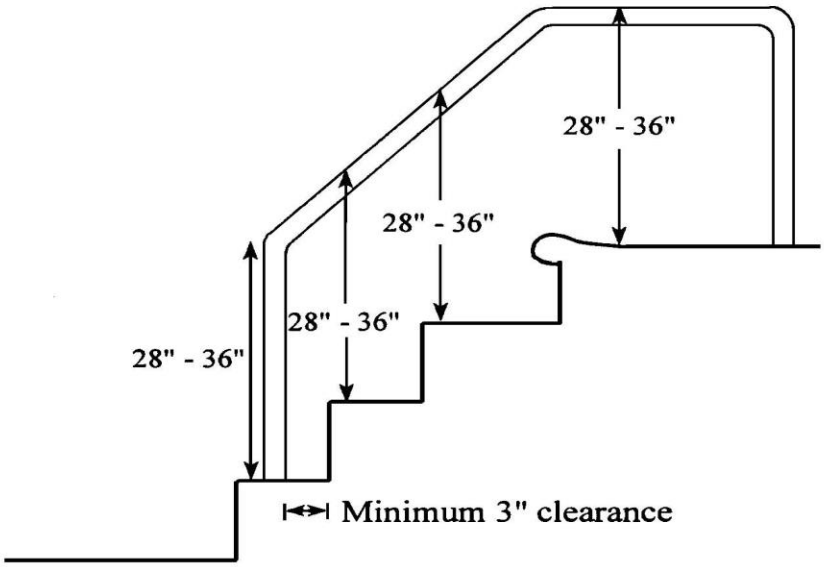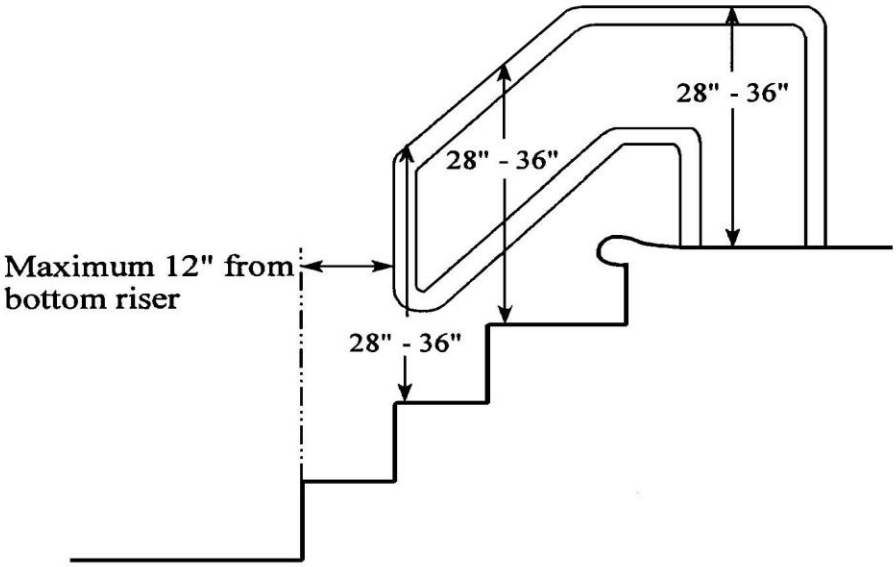
APPROVED HANDRAIL CONFIGURATION