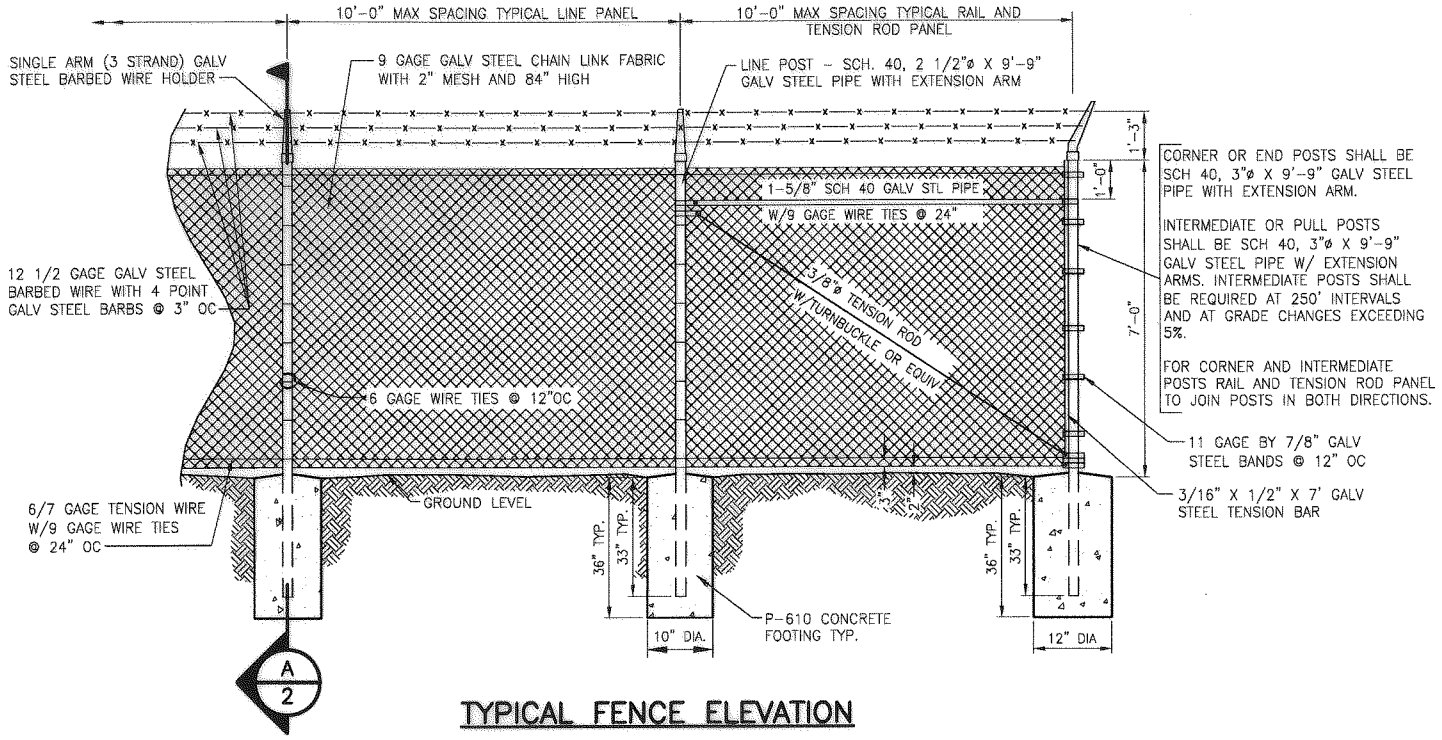

TYPICAL FENCE ELEVATION

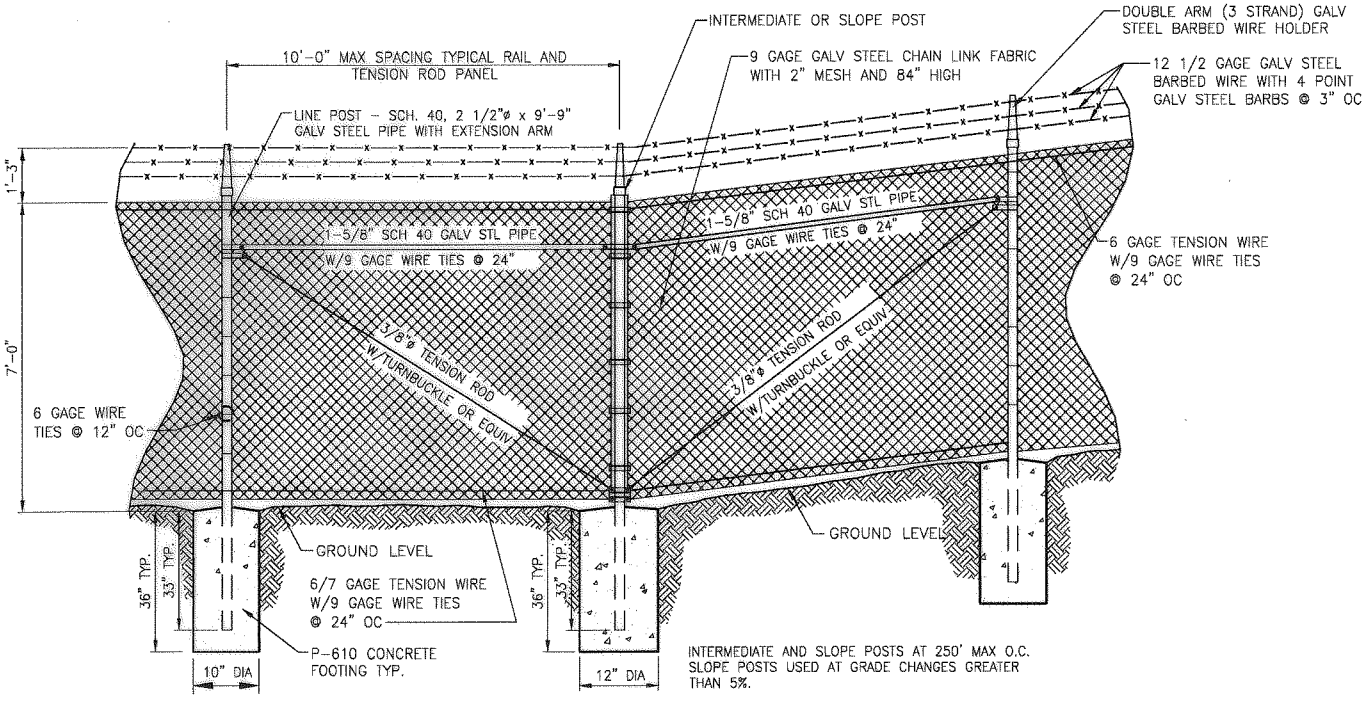

INTERMEDIATE POST DETAIL

CITY STANDARD FENCE

REVISIONS		CITY OF LONG BEACH, CALIFORNIA DEPARTMENT OF PUBLIC WORKS	STANDARD PLAN NO.
NO.	DATE		
1	03/17/11	CHAIN LINK FENCE AND GATES GREATER THAN 6' HIGH AND LESS THAN 8' HIGH	124
2			
3		APPROVED BY: [signature] DATE: 8/26/11	SHEET
4		CITY ENGINEER R.E. No. 40599 EX. DATE 03/31/13	1 OF 9

GENERAL NOTES:

1. SECURE DRIVE-FIT GALVANIZED CAP TO POST WITH 1/4" DIA. ROUND-HEAD RIVET.
2. FABRIC WIDTH AND NOMINAL FENCE HEIGHT = 7' UNLESS OTHERWISE NOTED.
3. IF FENCE WITH TOP RAIL IS SPECIFIED, DELETE STEEL TENSION WIRE AT TOP, AND PIPE RAILS AT INTERMEDIATE, SLOPE, END AND CORNER POSTS. EXTEND TENSION ROD TO TOP RAIL.
4. BARBED WIRE SHALL BE USED ONLY WHEN SPECIFIED.
5. POST SPACING IS 10' MAXIMUM.
6. FILL CLEAR OPENINGS GREATER THAN 3" WITH FABRIC. FOR OPENINGS LESS THAN 18", TIE FABRIC TO POSTS.
7. STEEL BANDS AT TENSION BARS SHALL BE 1/8" x 1" MINIMUM, SPACED AT 16" MAXIMUM.
8. CITY OF LONG BEACH BUILDING PERMIT SHALL BE OBTAINED.

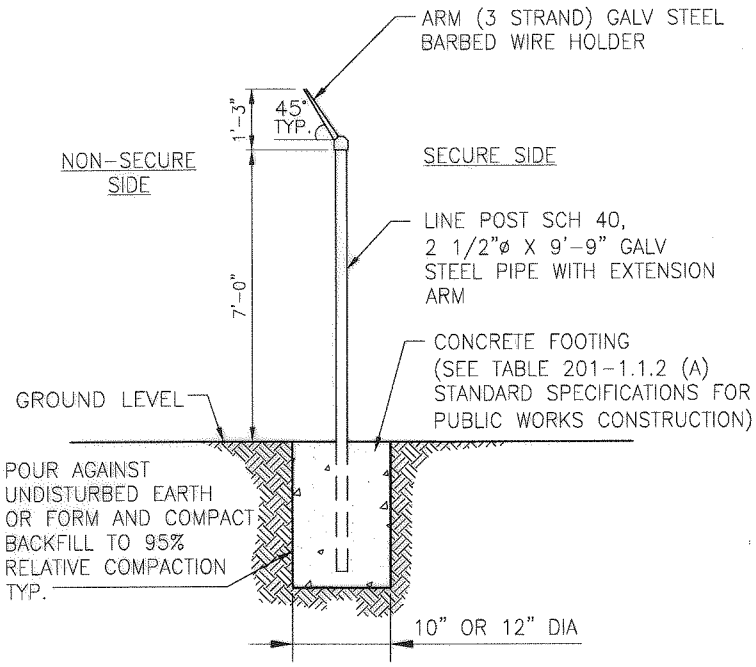

NOTE:

FABRIC TO BE INSERTED ON NON-SECURE SIDE OF FENCE.

A — SECTION

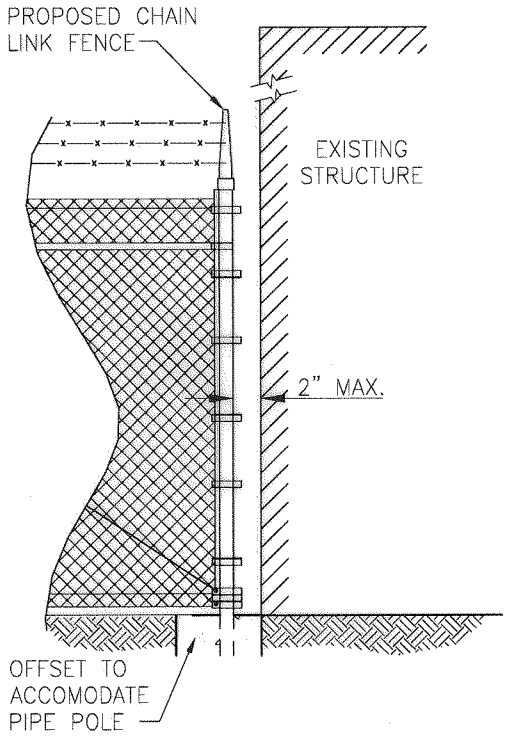

TIE INTO EXISTING WALL DETAIL

CITY STANDARD FENCE

REVISIONS NO.	DATE	CITY OF LONG BEACH, CALIFORNIA DEPARTMENT OF PUBLIC WORKS	STANDARD PLAN NO.
1	08/04/11	CHAIN LINK FENCE AND GATES GREATER THAN 6' HIGH AND LESS THAN 8' HIGH	124
2			
3		APPROVED BY: _____ DATE: 8/26/11	SHEET
4		CITY ENGINEER R.E. No. 40599 EX. DATE 3/31/13	2 OF 9

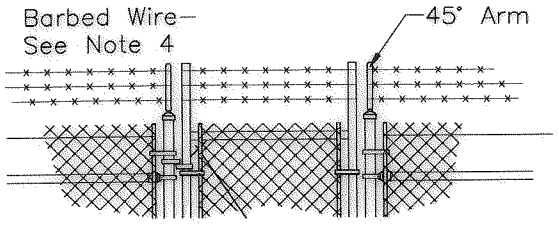

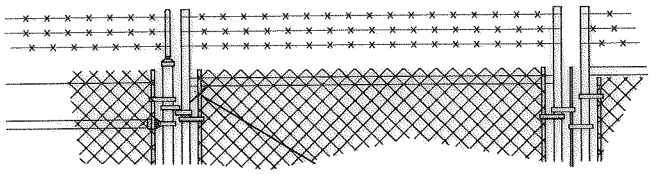

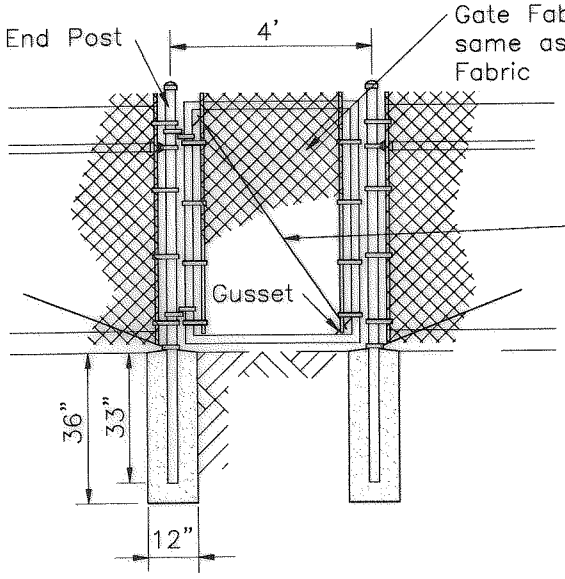

WALK GATE

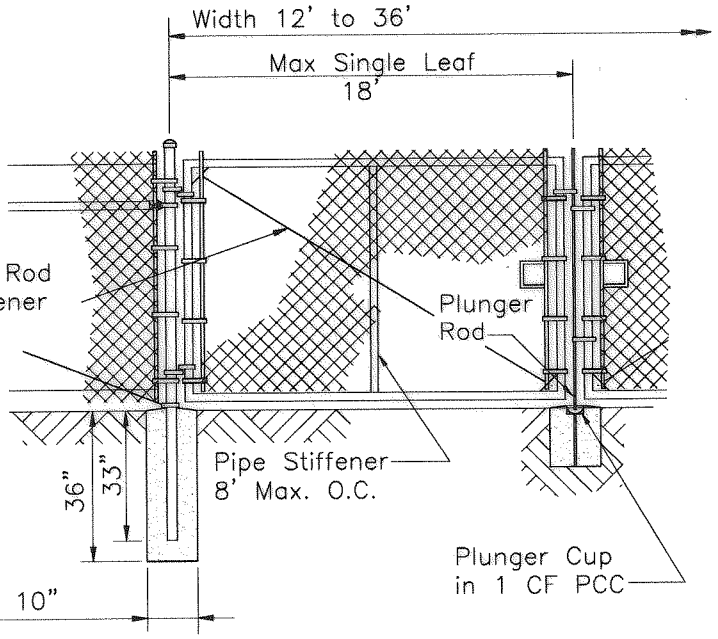

DRIVE GATE

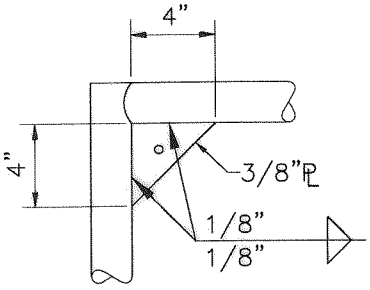

GUSSET

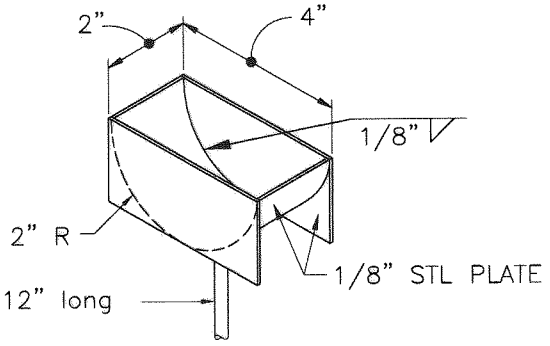

PLUNGER CUP
ISOMETRIC

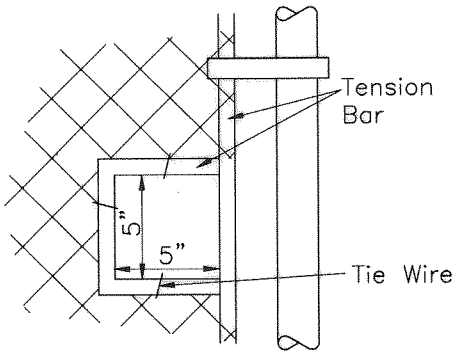

CHAIN AND LOCK
CUT–OUT

CITY STANDARD FENCE

REVISIONS		CITY OF LONG BEACH, CALIFORNIA	STANDARD PLAN NO.
NO.	DATE	DEPARTMENT OF PUBLIC WORKS	
1	08/04/11	CHAIN LINK FENCE AND GATES GREATER THAN 6' HIGH AND LESS THAN 8' HIGH	124
2			
3		APPROVED BY: _____ DATE: 8/26/11	SHEET
4		CITY ENGINEER R.E. No. 40599 EX. DATE 03/31/13	3 OF 9

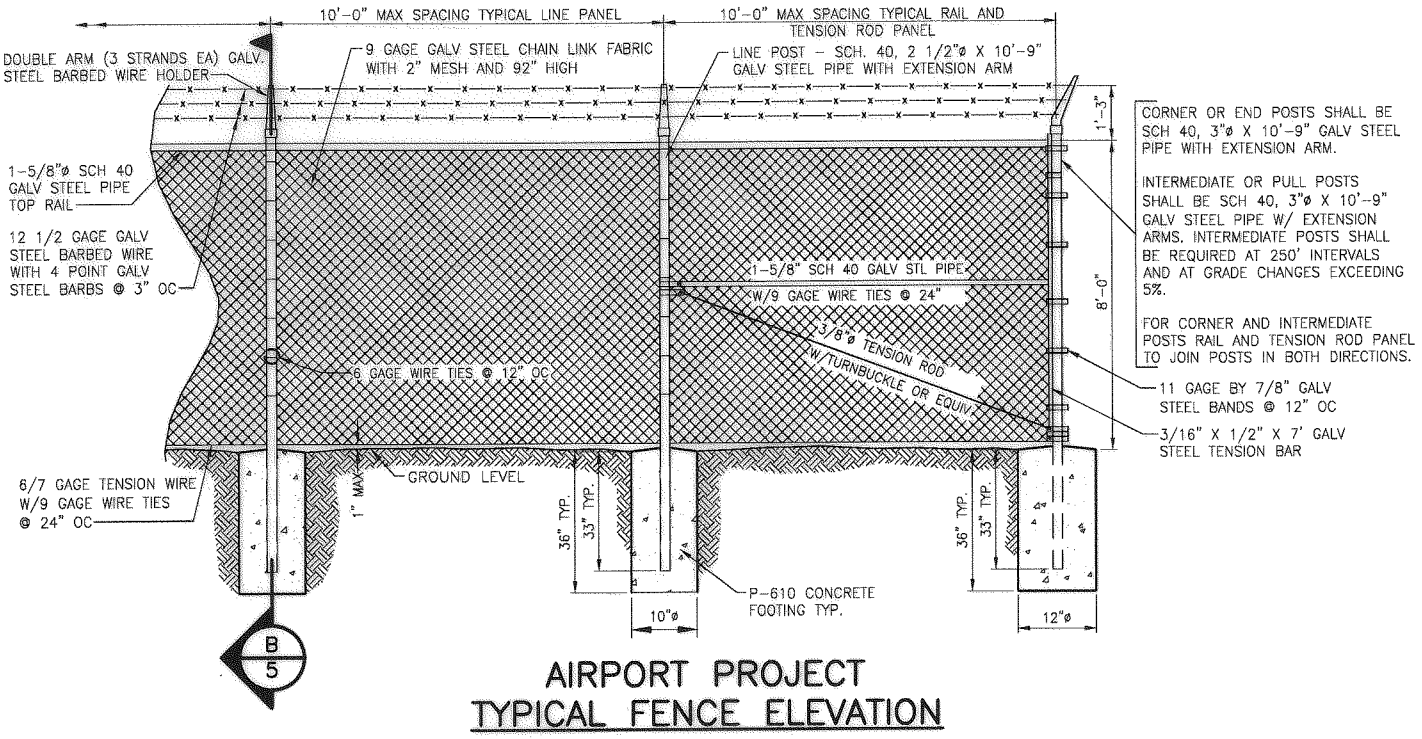

CORNER OR END POSTS SHALL BE SCH 40, 3"ø X 10'-9" GALV STEEL PIPE WITH EXTENSION ARM.

INTERMEDIATE OR PULL POSTS SHALL BE SCH 40, 3"ø X 10'-9" GALV STEEL PIPE W/ EXTENSION ARMS. INTERMEDIATE POSTS SHALL BE REQUIRED AT 250' INTERVALS AND AT GRADE CHANGES EXCEEDING 5%.

FOR CORNER AND INTERMEDIATE POSTS RAIL AND TENSION ROD PANEL TO JOIN POSTS IN BOTH DIRECTIONS.

AIRPORT PROJECT
TYPICAL FENCE ELEVATION

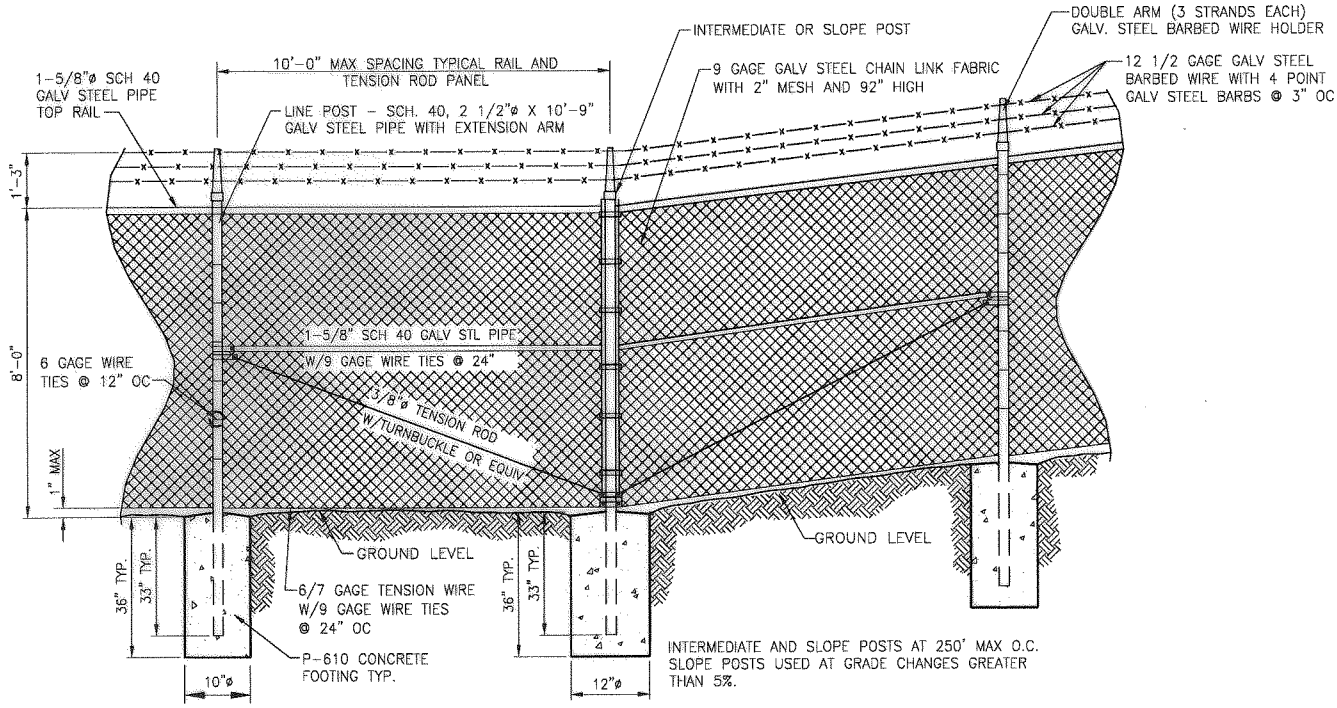

INTERMEDIATE AND SLOPE POSTS AT 250' MAX O.C. SLOPE POSTS USED AT GRADE CHANGES GREATER THAN 5%.

AIRPORT PROJECT
INTERMEDIATE POST DETAIL

AIRPORT STANDARD FENCE

REVISIONS		CITY OF LONG BEACH, CALIFORNIA DEPARTMENT OF PUBLIC WORKS	STANDARD PLAN NO.
NO.	DATE		
1	08/04/11	CHAIN LINK FENCE AND GATES GREATER THAN 6' HIGH AND LESS THAN 8' HIGH	124
2			
3		APPROVED BY: _____ DATE: 8/26/11	SHEET
4		CITY ENGINEER R.E. No. 40599 EX. DATE 03/31/13	4 OF 9

AIRPORT STANDARD FENCE GENERAL NOTES:

1. ALL SIZES AND GAUGES FOR PIPE POSTS, RODS, AND WIRES ARE OUTSIDE DIAMETERS
2. ALL FENCE MATERIAL AND FITTINGS SHALL BE OF HIGH GRADE DOMESTIC QUALITY STEEL, AND SHALL BEAR MARKINGS AS BEING SUCH.
3. THE CHAIN LINK FABRIC SHALL BE PLACED ON THE OUTWARD FACE OF THE POSTS, STRETCHED TAUT AND SECURELY FASTENED.
4. ALL CHAIN LINK FENCE MATERIAL AND FITTINGS SHALL CONFORM TO STANDARD SPECIFICATIONS FOR PUBLIC WORKS CONSTRUCTION SECTION 206-6 UNLESS OTHERWISE SPECIFIED.
5. CONCRETE FOR CHAIN LINK FENCE POST FOOTINGS SHALL BE P-610. ALL OTHER CONCRETE, INCLUDING SILL, BARRIER, FOOTINGS AND SLABS FOR GATES POSTS, SHALL BE P-610.
6. CITY OF LONG BEACH BUILDING PERMIT SHALL BE OBTAINED.
7. GATES SHALL BE PER PLAN DETAILS AND DETAILS ON SHEET 3 of 9 OF THIS STANDARD PLAN WITH BARBED WIRE PER AIRPORT FENCING DETAILS.

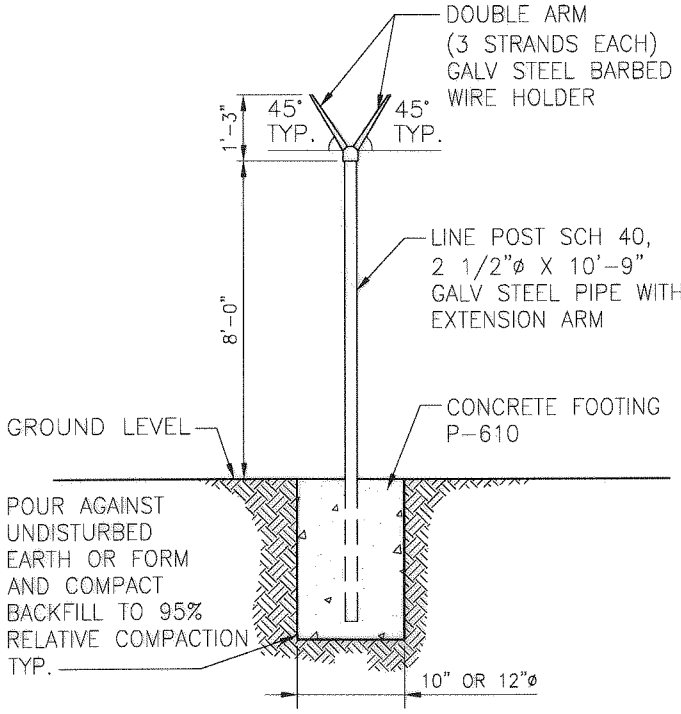

NOTE:
FABRIC TO BE INSERTED ON NON-SECURE SIDE OF FENCE.

B SECTION

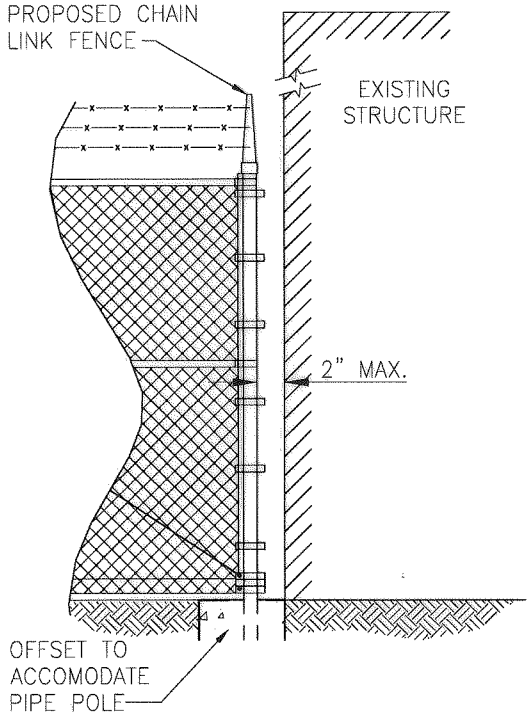

TIE INTO EXISTING WALL DETAIL

AIRPORT STANDARD FENCE

REVISIONS NO.	DATE	CITY OF LONG BEACH, CALIFORNIA DEPARTMENT OF PUBLIC WORKS	STANDARD PLAN NO.
1	08/04/11	CHAIN LINK FENCE AND GATES GREATER THAN 6' HIGH AND LESS THAN 8' HIGH	124
2			
3		APPROVED BY: _____ DATE: 8/26/11	SHEET
4		CITY ENGINEER R.E. No. 40599 EX. DATE 03/31/13	5 OF 9

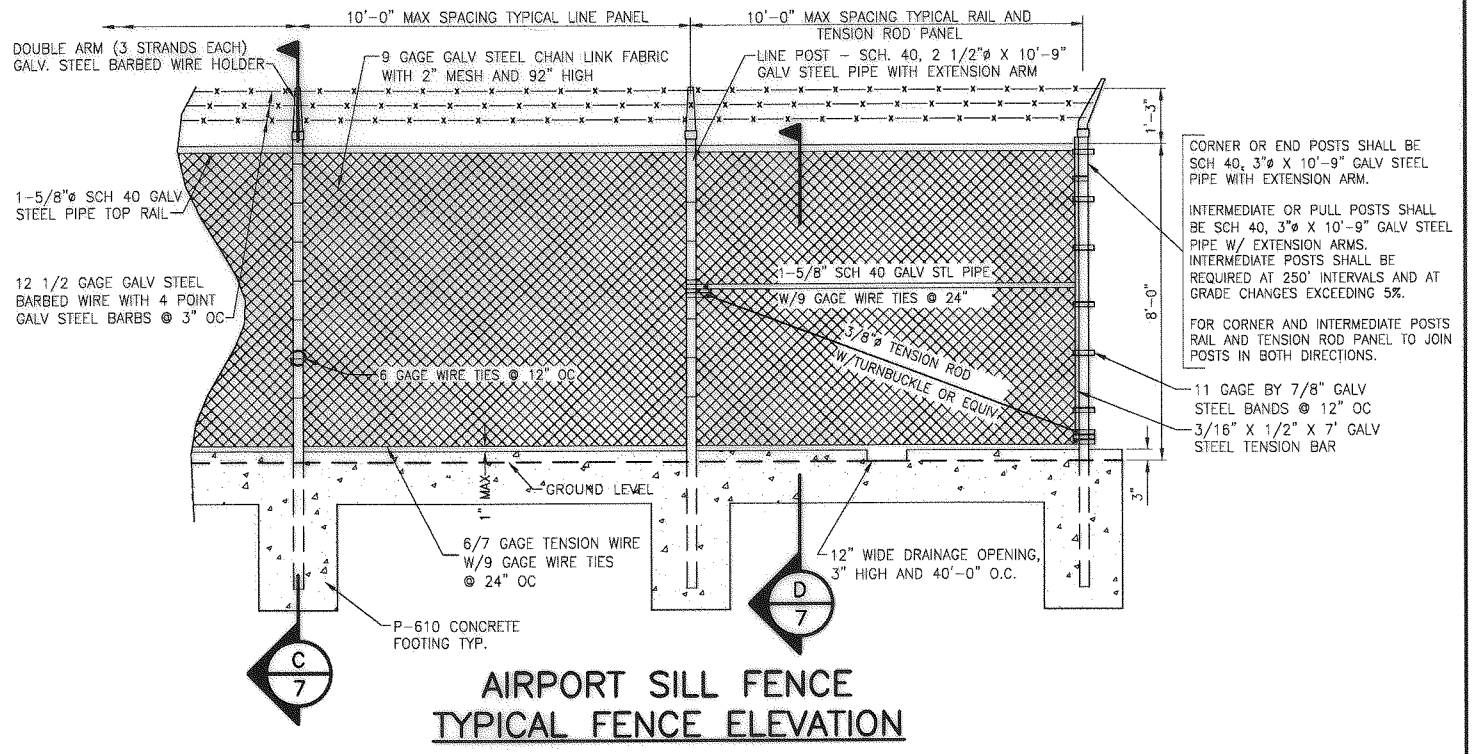

AIRPORT SILL FENCE
TYPICAL FENCE ELEVATION

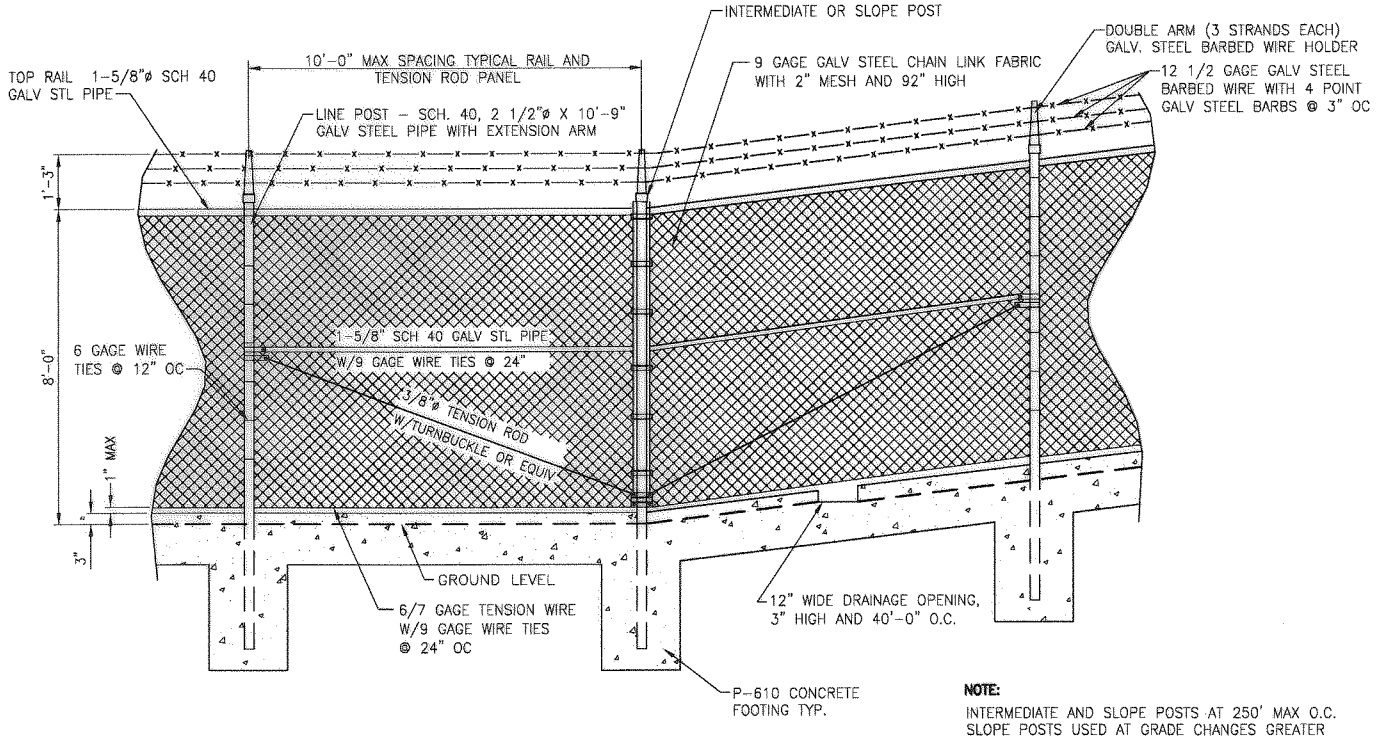

NOTE:
INTERMEDIATE AND SLOPE POSTS AT 250' MAX O.C. SLOPE POSTS USED AT GRADE CHANGES GREATER THAN 5%.

AIRPORT SILL FENCE
INTERMEDIATE POST DETAIL

AIRPORT SILL FENCE

REVISIONS		CITY OF LONG BEACH, CALIFORNIA	STANDARD PLAN NO.
NO.	DATE	DEPARTMENT OF PUBLIC WORKS	
1	08/04/11	CHAIN LINK FENCE AND GATES GREATER THAN 6' HIGH AND LESS THAN 8' HIGH	124
2			
3		APPROVED BY: _____ DATE: 8/26/11	SHEET
4		CITY ENGINEER R.E. No. 40599 EX. DATE 03/31/13	6 OF 9

AIRPORT SILL FENCE GENERAL NOTES:

1. ALL SIZES AND GAUGES FOR PIPE POSTS, RODS, AND WIRES ARE OUTSIDE DIAMETERS
2. ALL FENCE MATERIAL AND FITTINGS SHALL BE OF HIGH GRADE DOMESTIC QUALITY STEEL, AND SHALL BEAR MARKINGS AS BEING SUCH.
3. THE CHAIN LINK FABRIC SHALL BE PLACED ON THE OUTWARD FACE OF THE POSTS, STRETCHED TAUT AND SECURELY FASTENED.
4. ALL CHAIN LINK FENCE MATERIAL AND FITTINGS SHALL CONFORM TO STANDARD SPECIFICATIONS FOR PUBLIC WORKS CONSTRUCTION SECTION 206-6 UNLESS OTHERWISE SPECIFIED.
5. CONCRETE FOR CHAIN LINK FENCE POST FOOTINGS SHALL BE P-610. ALL OTHER CONCRETE, INCLUDING SILL, BARRIER, FOOTINGS AND SLABS FOR GATES POSTS, SHALL BE P-610.
6. CITY OF LONG BEACH BUILDING PERMIT SHALL BE OBTAINED.
7. GATES SHALL BE PER PLAN DETAILS AND DETAILS ON SHEET 3 of 9 OF THIS STANDARD PLAN WITH BARBED WIRE PER AIRPORT FENCING DETAILS.
8. CONTRACTION JOINTS SHALL BE FORMED PER CONTRACTION JOINT DETAIL ON SHEET 9 OF 9 OF THIS STANDARD PLAN

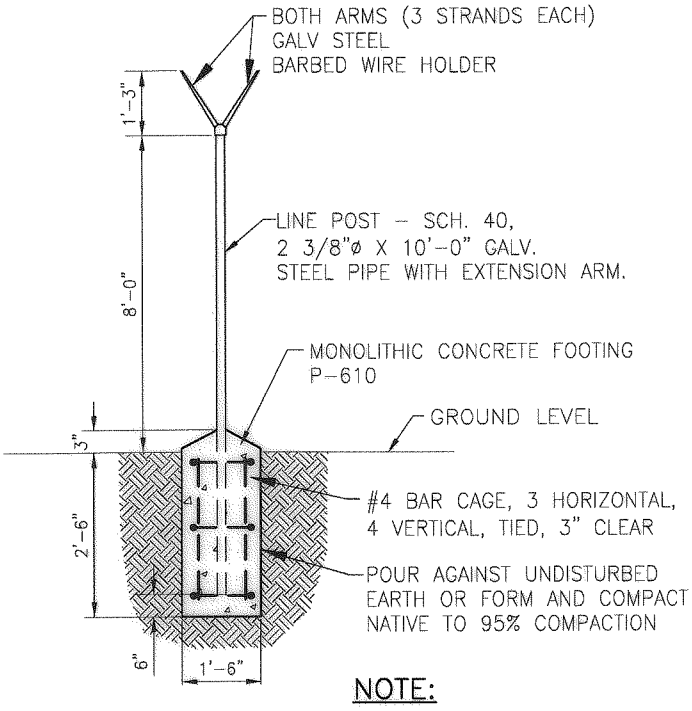

NOTE:
FABRIC TO BE INSERTED ON NON-SECURE SIDE OF FENCE.

C SECTION

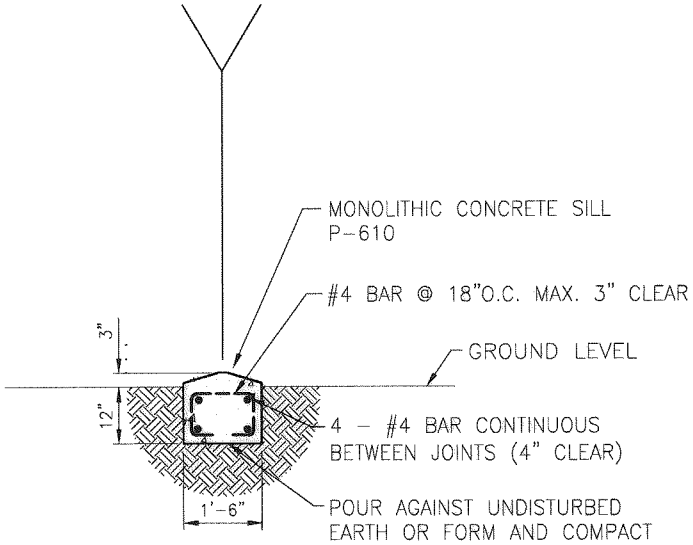

D SECTION

AIRPORT SILL FENCE

REVISIONS NO.	DATE	CITY OF LONG BEACH, CALIFORNIA DEPARTMENT OF PUBLIC WORKS	STANDARD PLAN NO.
1	08/04/11	CHAIN LINK FENCE AND GATES GREATER THAN 6' HIGH AND LESS THAN 8' HIGH	124
2			
3		APPROVED BY: _____ DATE: 8/26/11	SHEET
4		CITY ENGINEER R.E. No. 40599 EX. DATE 03/31/13	7 OF 9

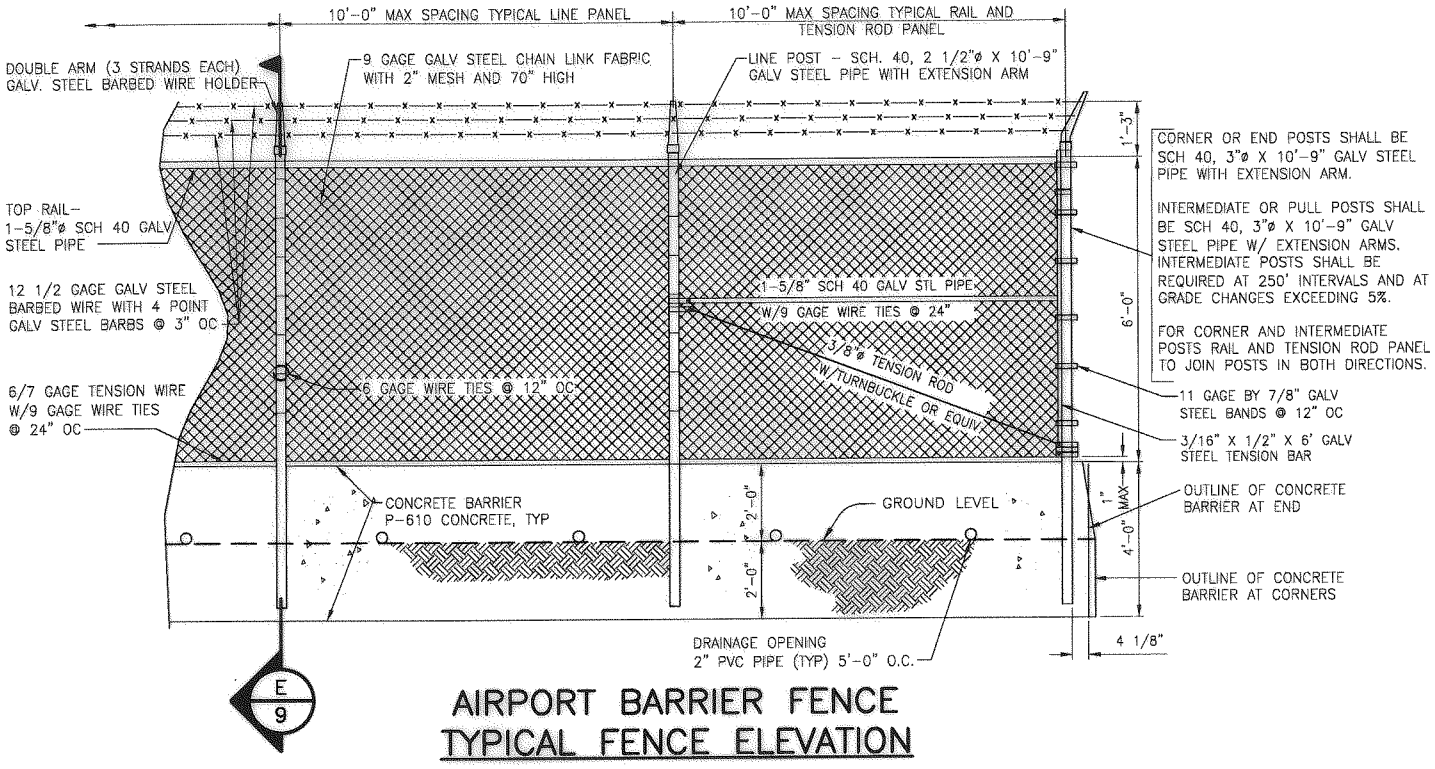

CORNER OR END POSTS SHALL BE SCH 40, 3"ø X 10'-9" GALV STEEL PIPE WITH EXTENSION ARM.

INTERMEDIATE OR PULL POSTS SHALL BE SCH 40, 3"ø X 10'-9" GALV STEEL PIPE W/ EXTENSION ARMS. INTERMEDIATE POSTS SHALL BE REQUIRED AT 250' INTERVALS AND AT GRADE CHANGES EXCEEDING 5%.

FOR CORNER AND INTERMEDIATE POSTS RAIL AND TENSION ROD PANEL TO JOIN POSTS IN BOTH DIRECTIONS.

AIRPORT BARRIER FENCE
TYPICAL FENCE ELEVATION

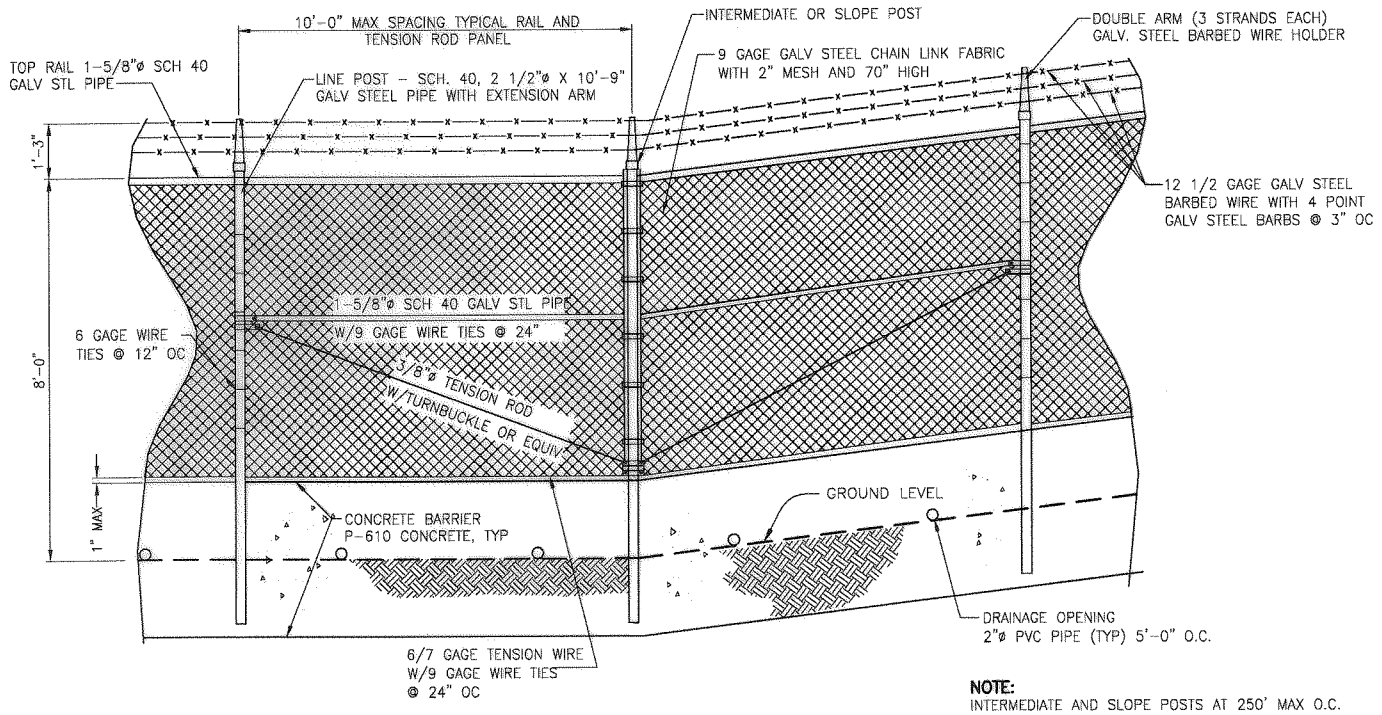

NOTE:
INTERMEDIATE AND SLOPE POSTS AT 250' MAX O.C. SLOPE POSTS USED AT GRADE CHANGES GREATER THAN 5%.

AIRPORT BARRIER FENCE
INTERMEDIATE POST DETAIL

AIRPORT BARRIER FENCE

REVISIONS		CITY OF LONG BEACH, CALIFORNIA DEPARTMENT OF PUBLIC WORKS	STANDARD PLAN NO.
NO.	DATE		
1	08/04/11	CHAIN LINK FENCE AND GATES GREATER THAN 6' HIGH AND LESS THAN 8' HIGH	124
2			
3		APPROVED BY: _____ DATE: 8/26/11	SHEET
4		CITY ENGINEER R.E. No. 40599 EX. DATE 03/31/13	8 OF 9

AIRPORT BARRIER FENCE GENERAL NOTES:

1. ALL SIZES AND GAUGES FOR PIPE POSTS, RODS, AND WIRES ARE OUTSIDE DIAMETERS
2. ALL FENCE MATERIAL AND FITTINGS SHALL BE OF HIGH GRADE DOMESTIC QUALITY STEEL, AND SHALL BEAR MARKINGS AS BEING SUCH.
3. THE CHAIN LINK FABRIC SHALL BE PLACED ON THE OUTWARD FACE OF THE POSTS, STRETCHED TAUT AND SECURELY FASTENED.
4. ALL CHAIN LINK FENCE MATERIAL AND FITTINGS SHALL CONFORM TO STANDARD SPECIFICATIONS FOR PUBLIC WORKS CONSTRUCTION SECTION 206-6 UNLESS OTHERWISE SPECIFIED.
5. CONCRETE FOR CHAIN LINK FENCE POST FOOTINGS SHALL BE P-610. ALL OTHER CONCRETE, INCLUDING SILL, BARRIER, FOOTINGS AND SLABS FOR GATES POSTS, SHALL BE P-610.
6. CITY OF LONG BEACH BUILDING PERMIT SHALL BE OBTAINED.
7. GATES SHALL BE PER PLAN DETAILS AND DETAILS ON SHEET 3 of 9 OF THIS STANDARD PLAN WITH BARBED WIRE PER AIRPORT FENCING DETAILS.
8. CONTRACTION JOINTS SHALL BE FORMED PER CONTRACTION JOINT DETAIL ON SHEET 9 OF 9 OF THIS STANDARD PLAN

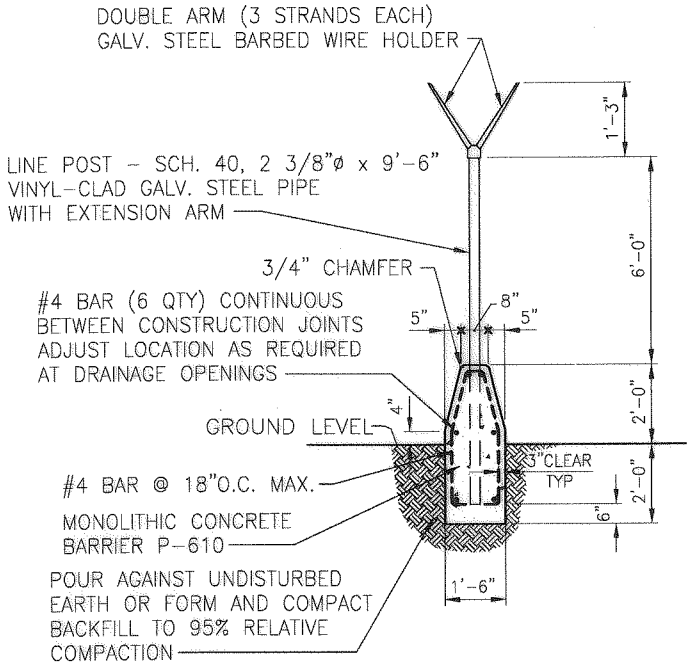

NOTE:
FABRIC TO BE INSERTED ON NON-SECURE SIDE OF FENCE.

E — SECTION

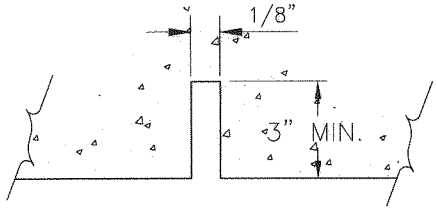

CONTRACTION JOINT DETAIL

1. CONTRACTOR SHALL INSTALL CONTRACTION JOINTS IN CONCRETE SILL AND BARRIER FENCES.
2. CONTRACTION JOINT SHALL BE PROVIDED AT 20' INTERVALS. JOINT MAY BE FORMED WITH 1/8" HARDBOARD RETAINED IN JOINT AND CUT BACK TO FACE OF CONCRETE. JOINT MAY BE FORMED WITH WASTEABLE OR REMOVABLE MATERIAL.
3. CONTRACTOR MAY SUBMIT ALTERNATIVE JOINT DETAILS FOR ENGINEERS APPROVAL.

AIRPORT BARRIER FENCE

REVISIONS		CITY OF LONG BEACH, CALIFORNIA	STANDARD PLAN NO.
NO.	DATE	DEPARTMENT OF PUBLIC WORKS	
1	08/04/11	CHAIN LINK FENCE AND GATES GREATER THAN 6' HIGH AND LESS THAN 8' HIGH	124
2			
3		APPROVED BY: _____ DATE: 8/26/11	SHEET
4		CITY ENGINEER R.E. No. 40599 EX. DATE 03/31/13	9 OF 9